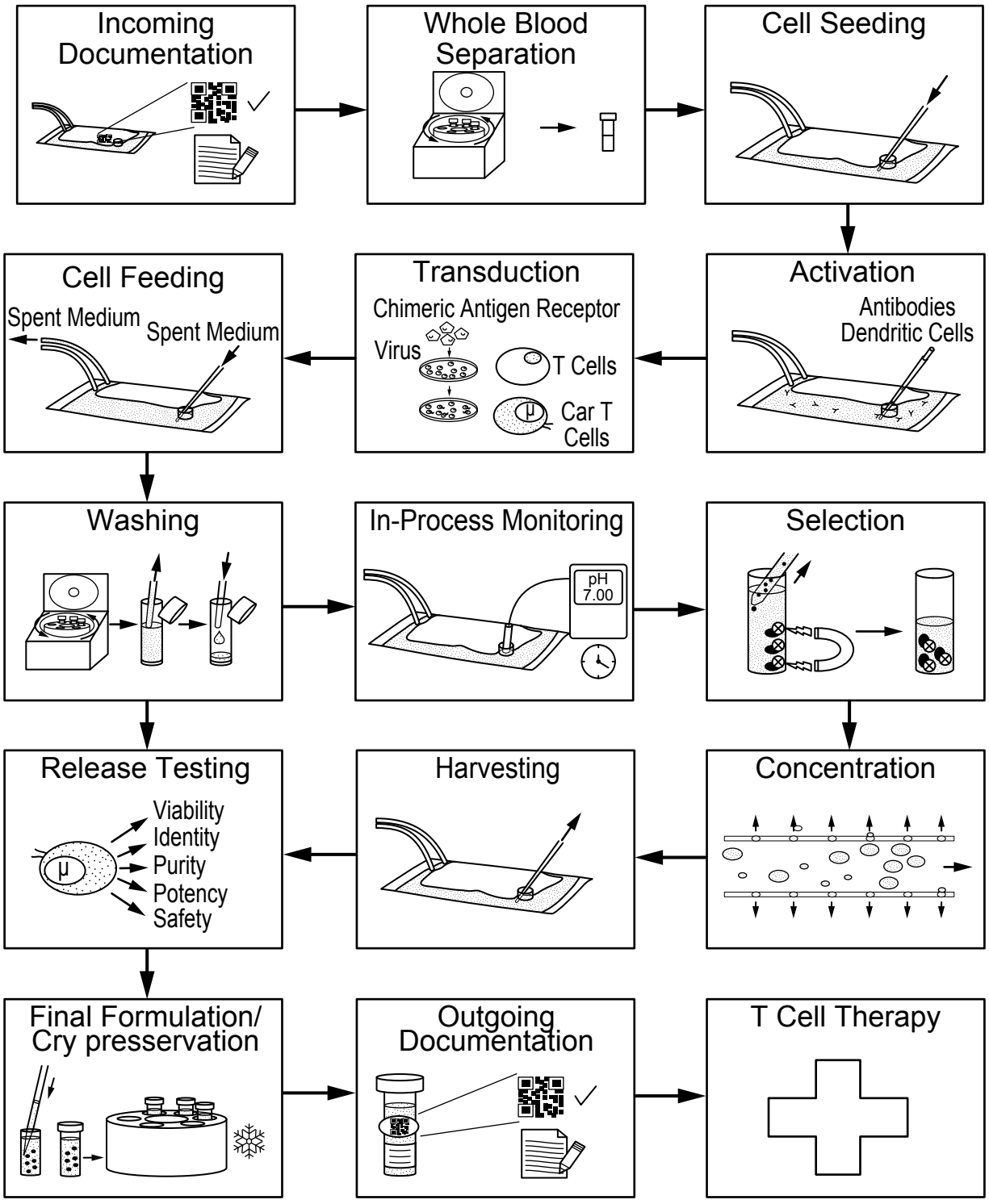
Incoming Documentation
Whole Blood Separation
Cell Seeding
Cell Feeding
Spent Medium
Spent Medium
Transduction
Chimeric Antigen Receptor
Virus
T Cells
Car T Cells
Activation
Antibodies
Dendritic Cells
Washing
In-Process Monitoring
pH 7.00
Selection
Release Testing
Viability
Identity
Purity
Potency
Safety
Harvesting
Concentration
Final Formulation/ Cry presservation
Outgoing Documentation
T Cell Therapy

FIG. 1

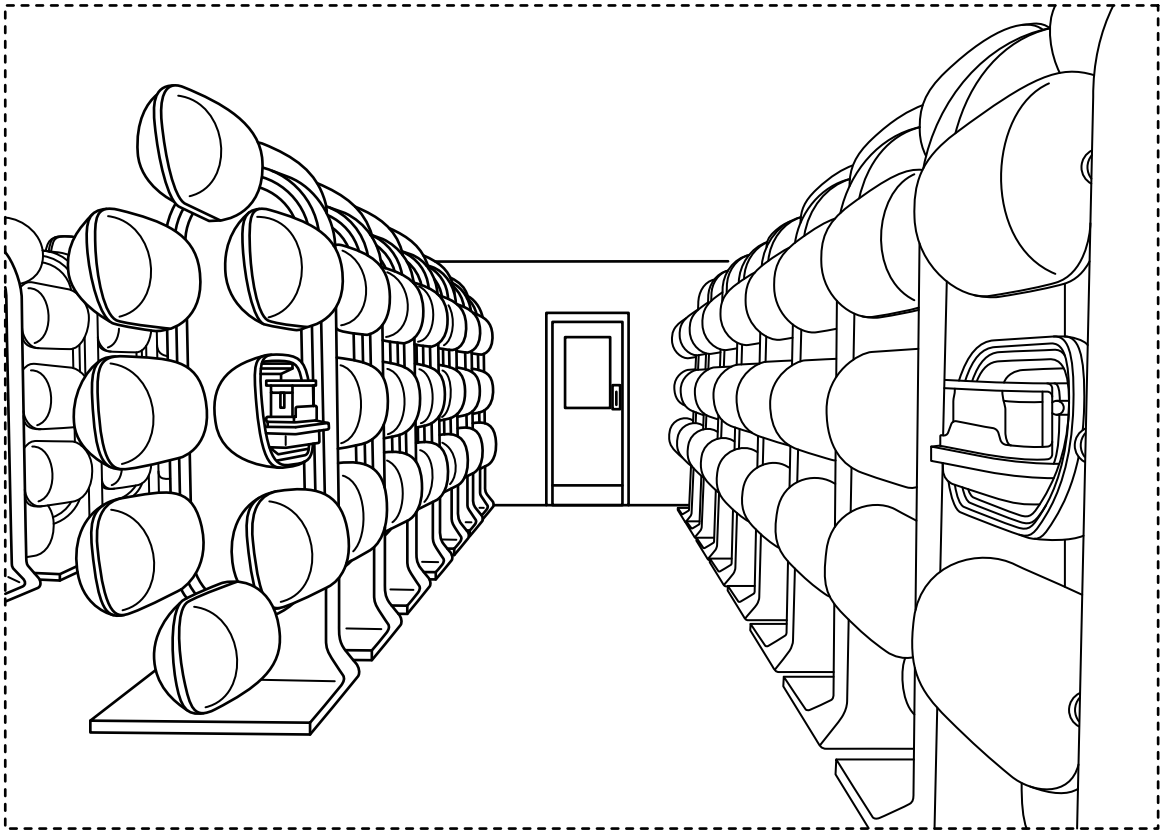

FIG. 2

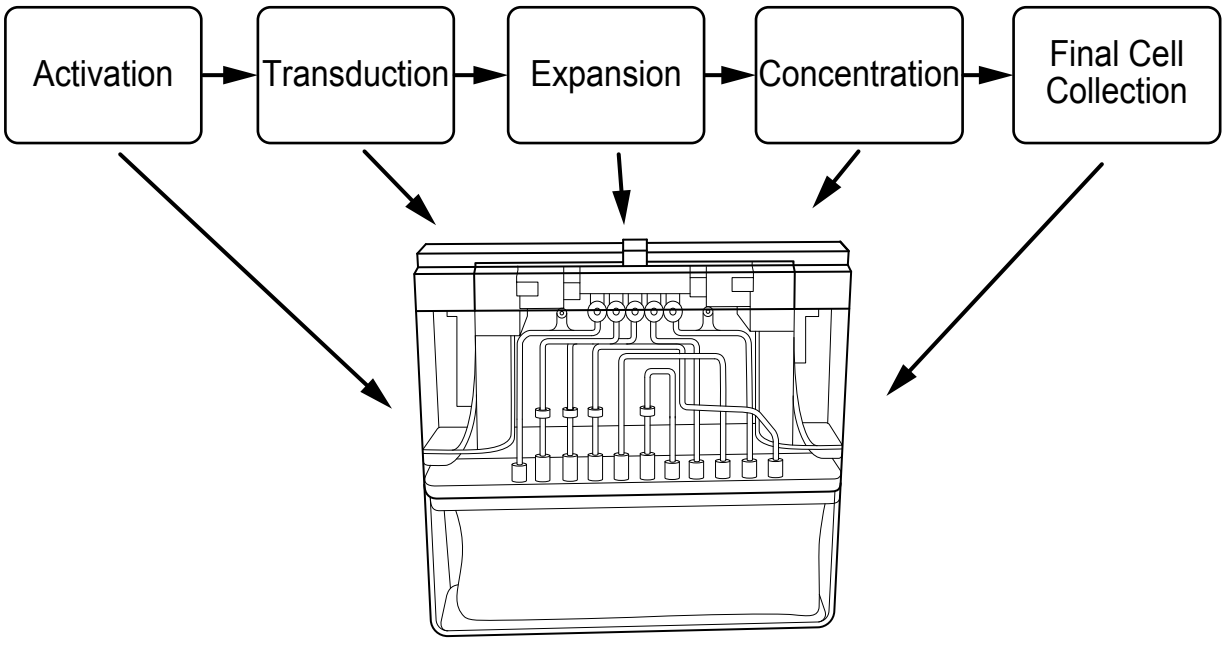
Activation
Transduction
Expansion
Concentration
Final Cell Collection

FIG. 3

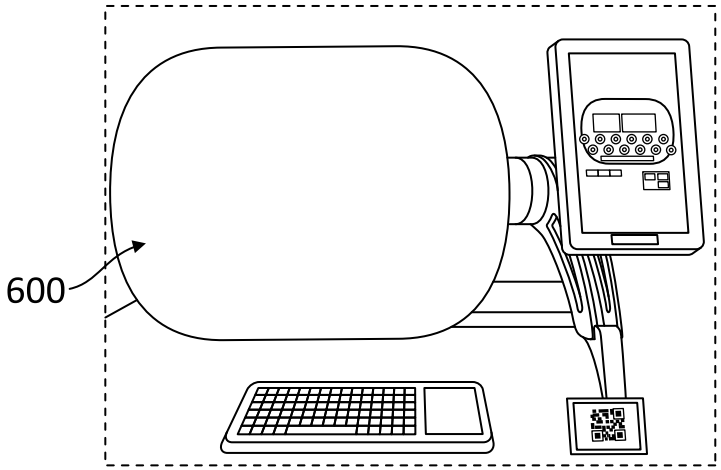

FIG. 4A

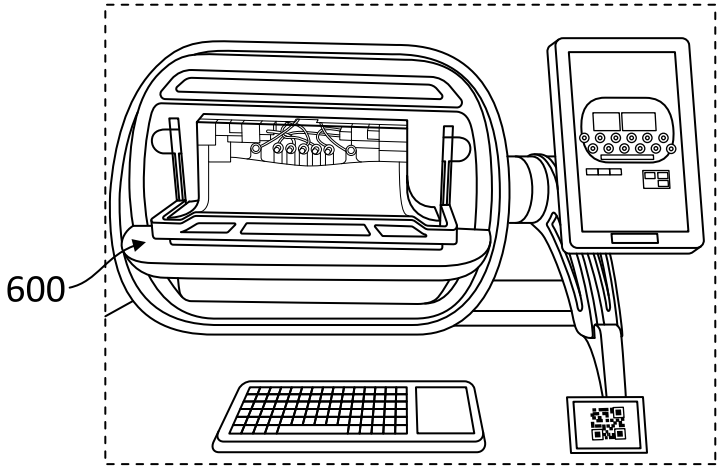

FIG. 4B

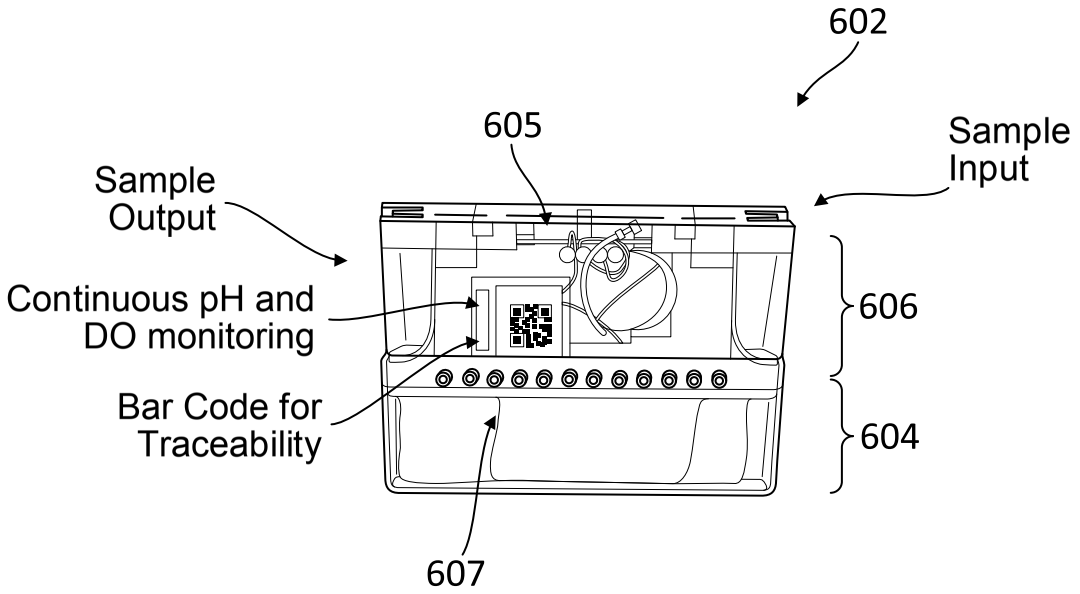

FIG. 4C

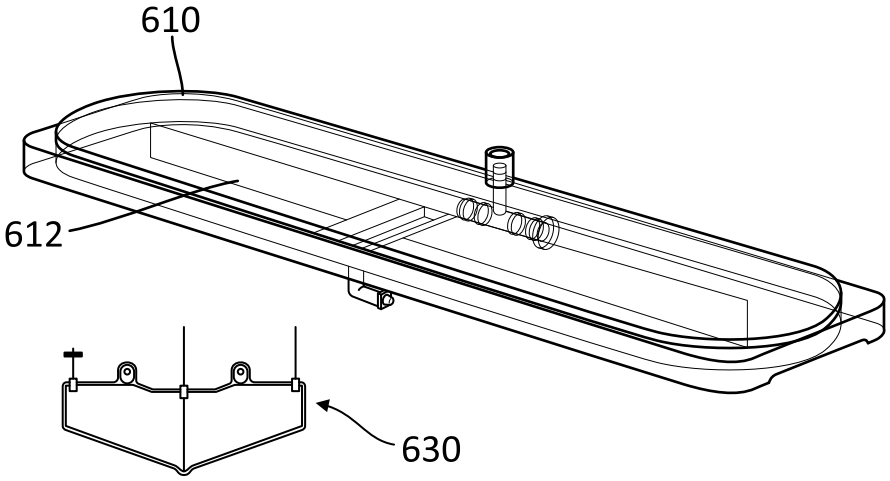

FIG. 4D

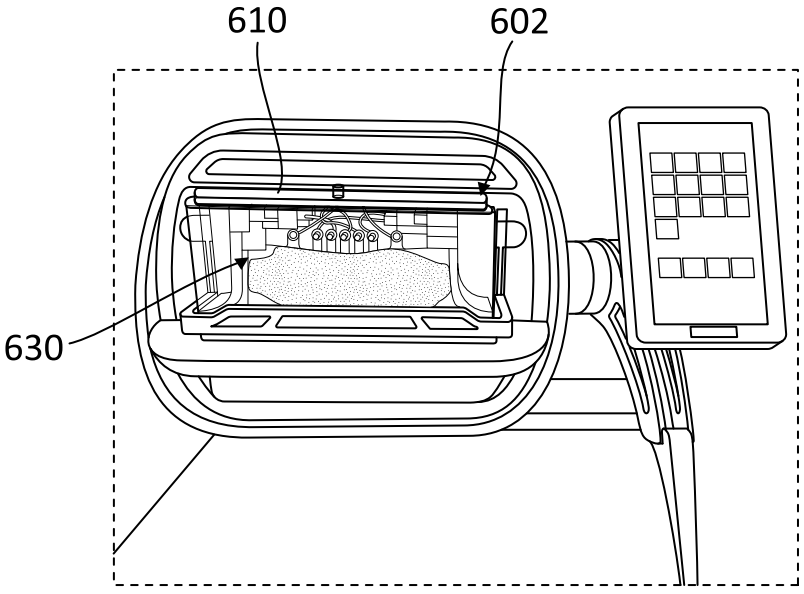

FIG. 4E

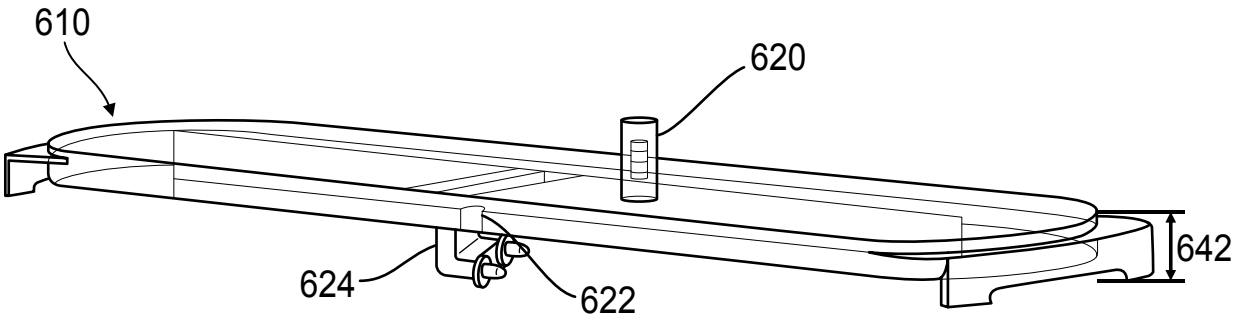

FIG. 4F

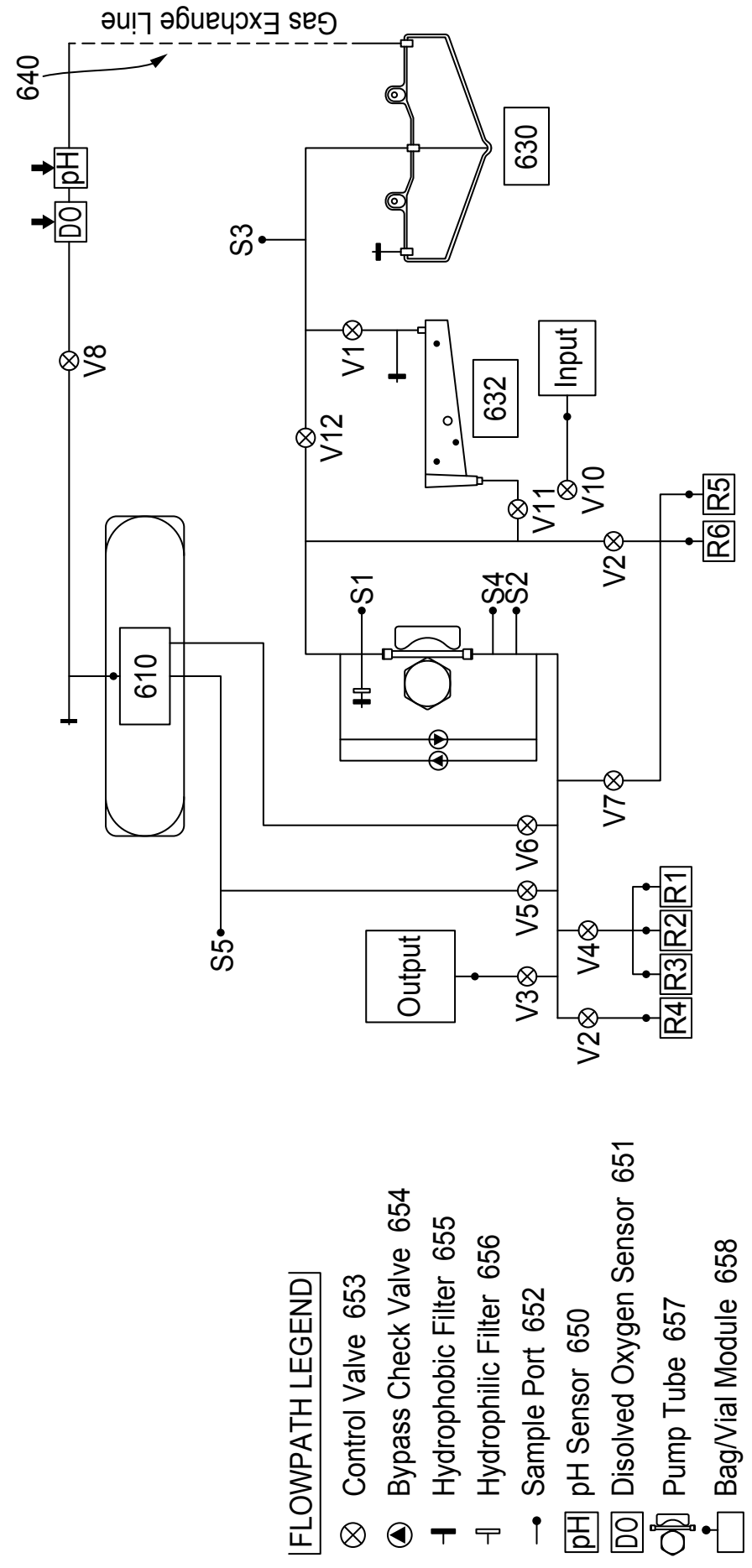
Gas Exchange Line
640
pH
DO
V8
610
630
S3
V1
V12
632
Input
V11
V10
S1
S4
S2
V2
R6
R5
V7
V6
V5
S5
Output
V3
V4
R4
R3
R2
R1
V2
FLOWPATH LEGEND
Control Valve 653
Bypass Check Valve 654
Hydrophobic Filter 655
Hydrophilic Filter 656
Sample Port 652
pH Sensor 650
Disolved Oxygen Sensor 651
Pump Tube 657
Bag/Vial Module 658

FIG. 4G

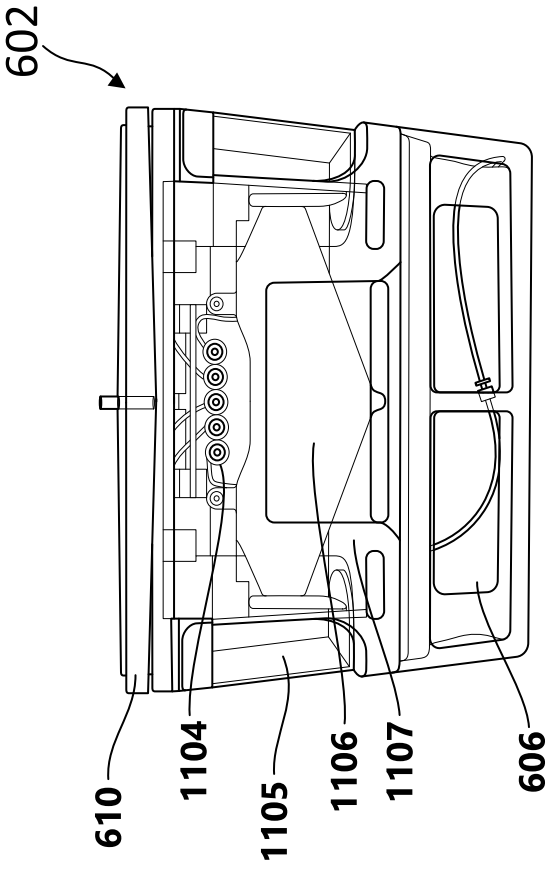

FIG. 5A

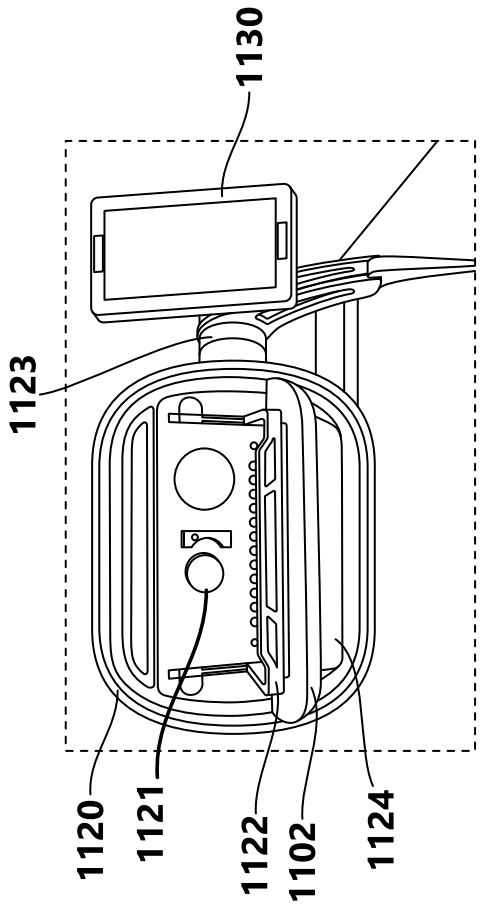

FIG. 5B

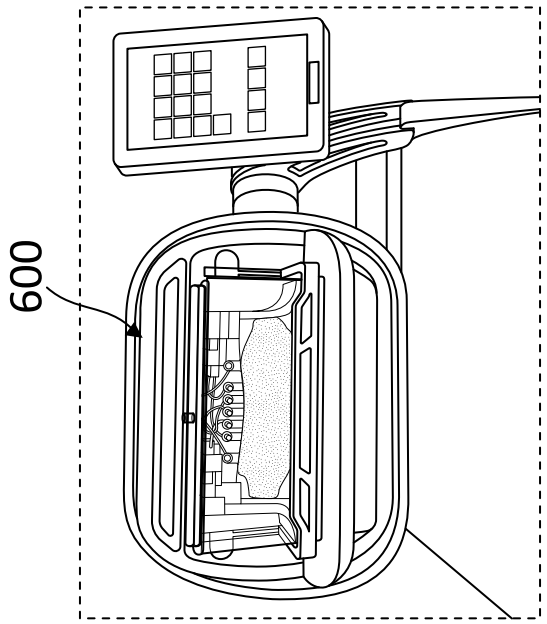

FIG. 5C

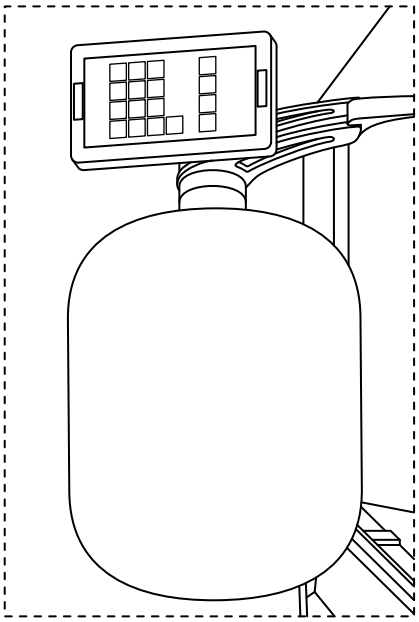

FIG. 5D

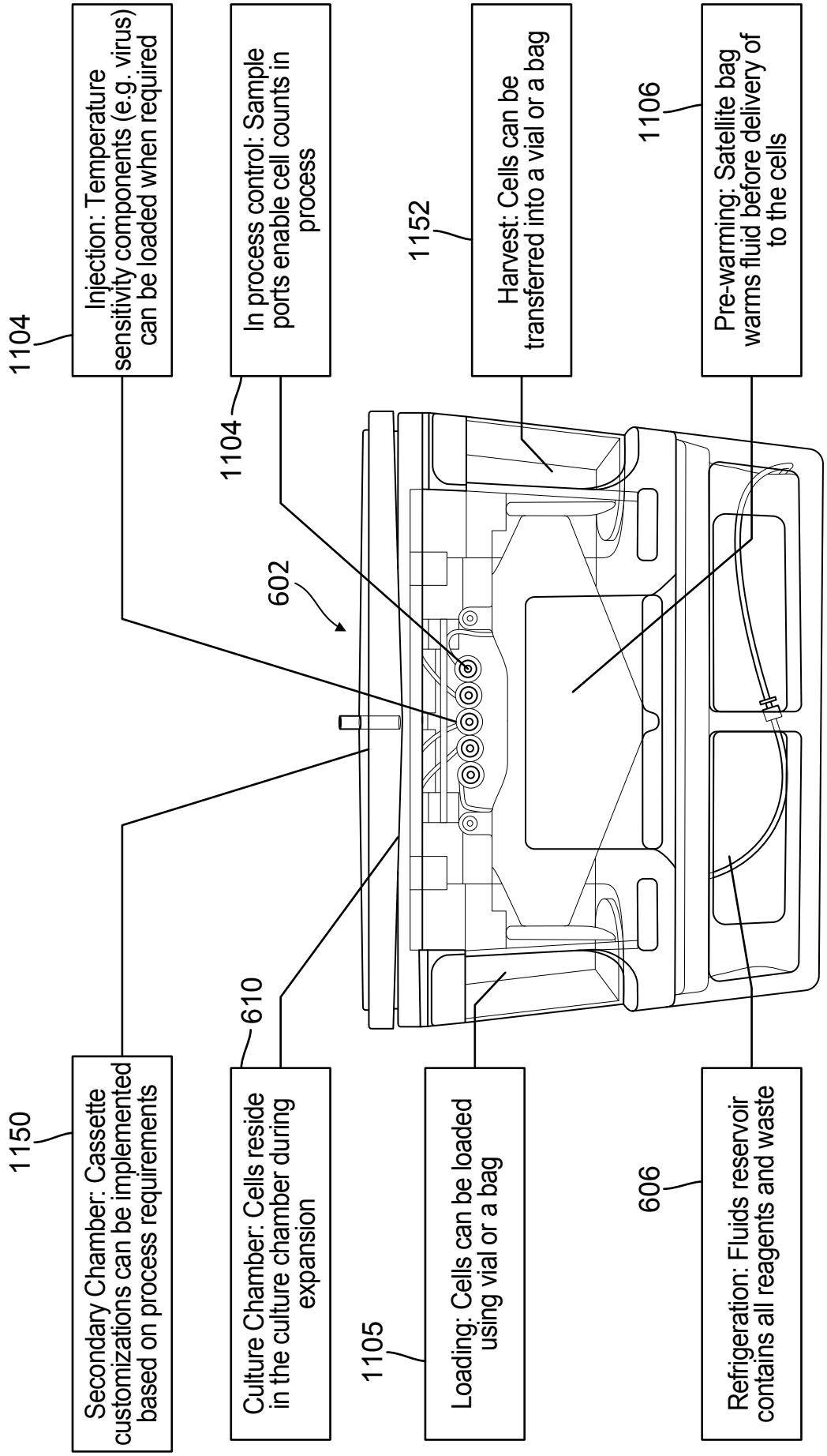
1104
Injection: Temperature sensitivity components (e.g. virus) can be loaded when required
1104
In process control: Sample ports enable cell counts in process
1152
Harvest: Cells can be transferred into a vial or a bag
1106
Pre-warming: Satellite bag warms fluid before delivery of to the cells
602
1150
Secondary Chamber: Cassette customizations can be implemented based on process requirements
610
Culture Chamber: Cells reside in the culture chamber during expansion
1105
Loading: Cells can be loaded using vial or a bag
606
Refrigeration: Fluids reservoir contains all reagents and waste

FIG. 5E

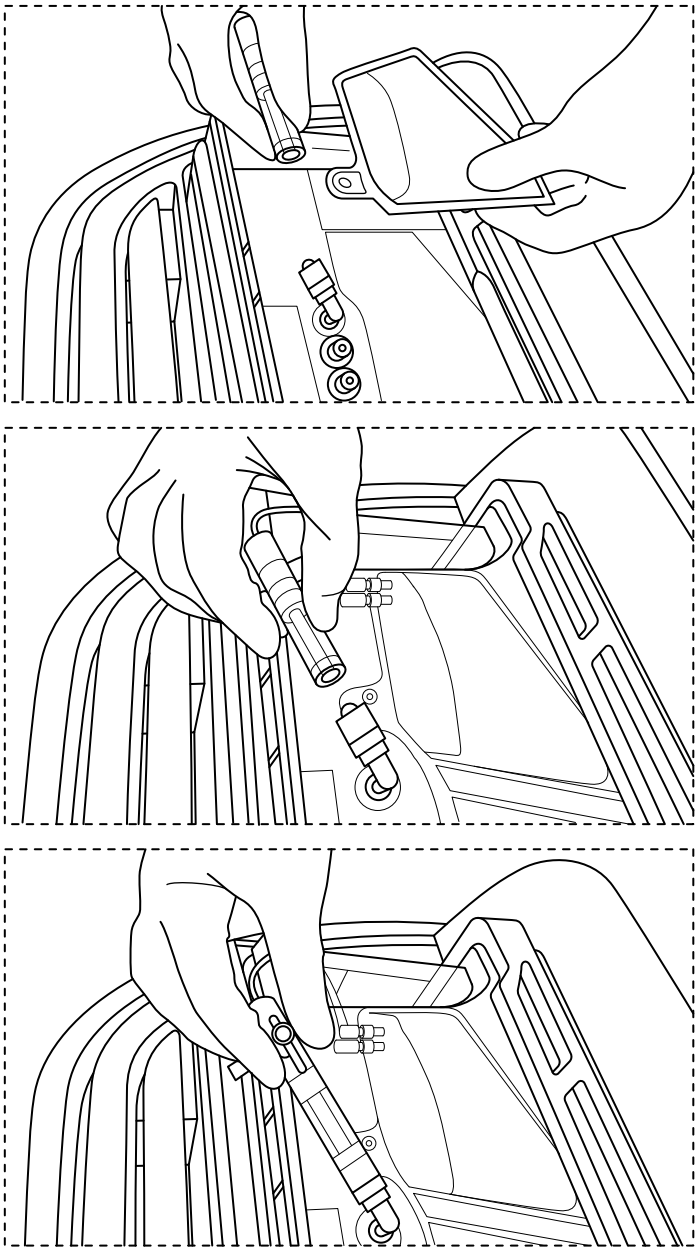

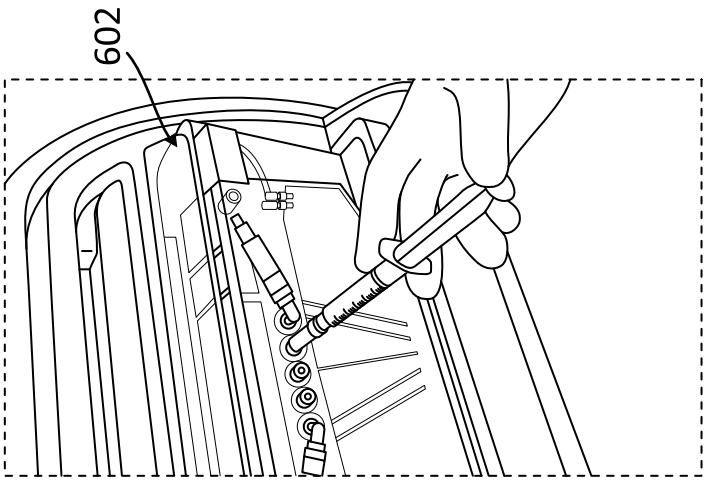

FIG. 5F

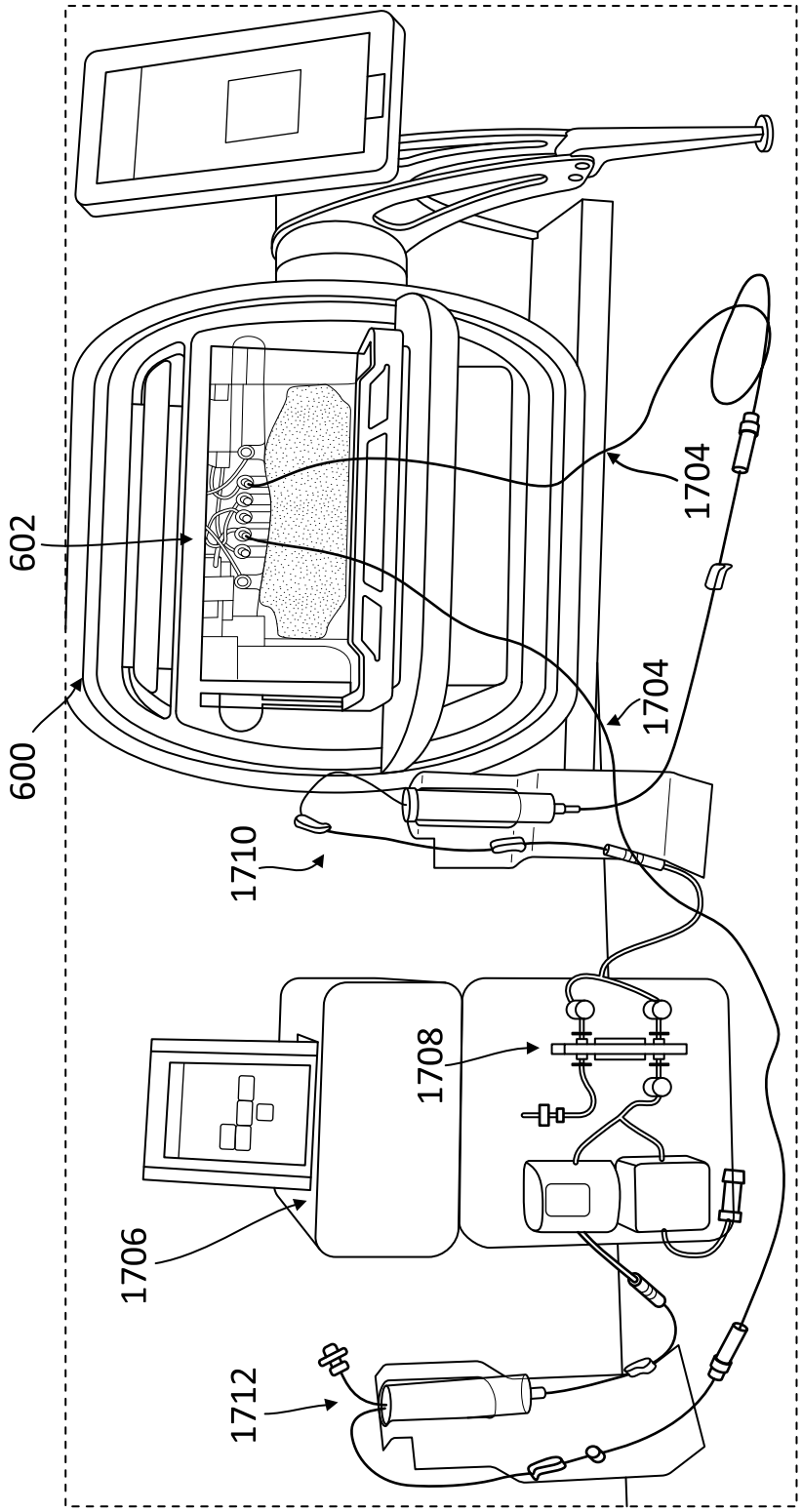

FIG. 6

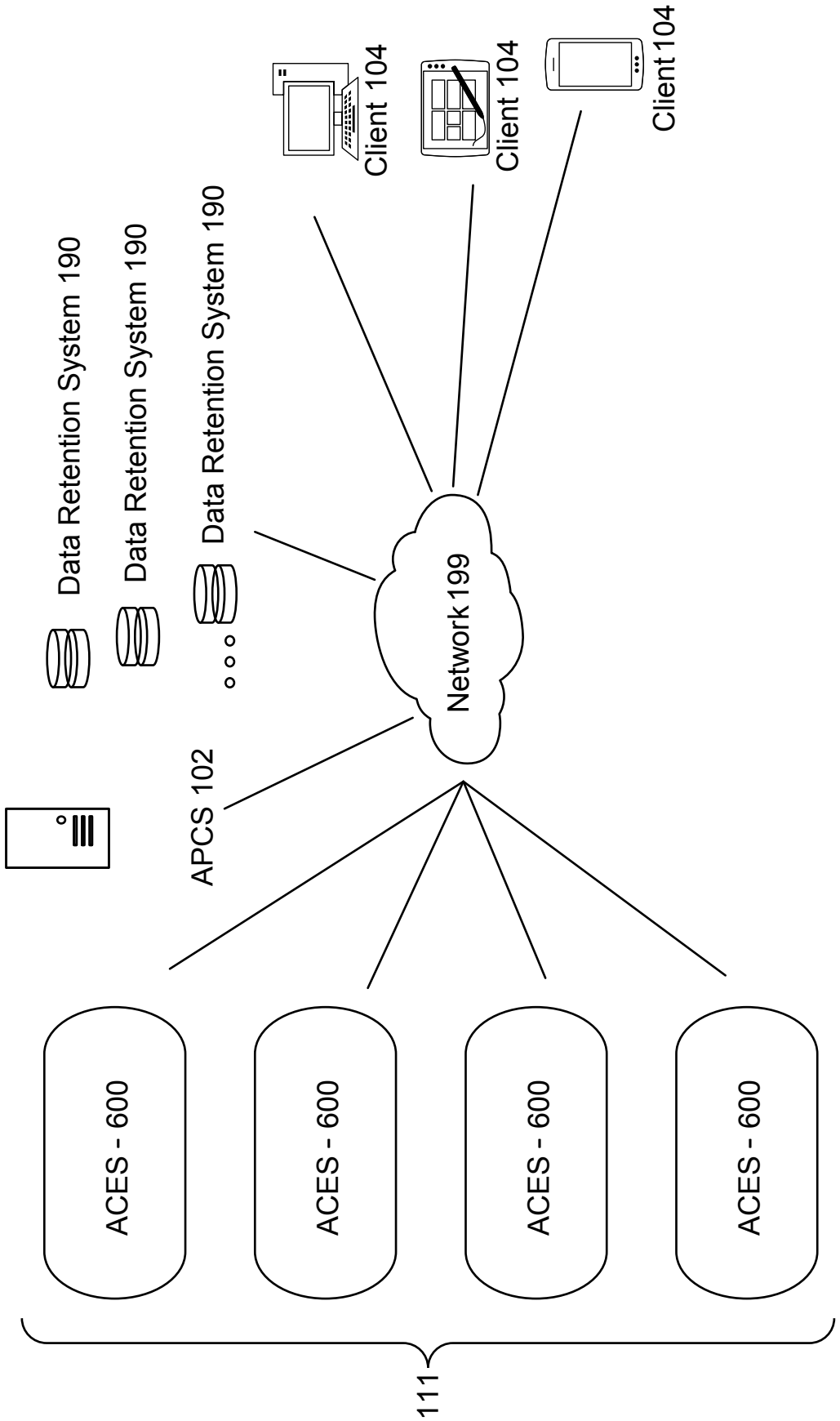
Data Retention System 190
Data Retention System 190
Data Retention System 190
Client 104
Client 104
Client 104
Network 199
APCS 102
ACES - 600
ACES - 600
ACES - 600
ACES - 600
111

FIG. 7

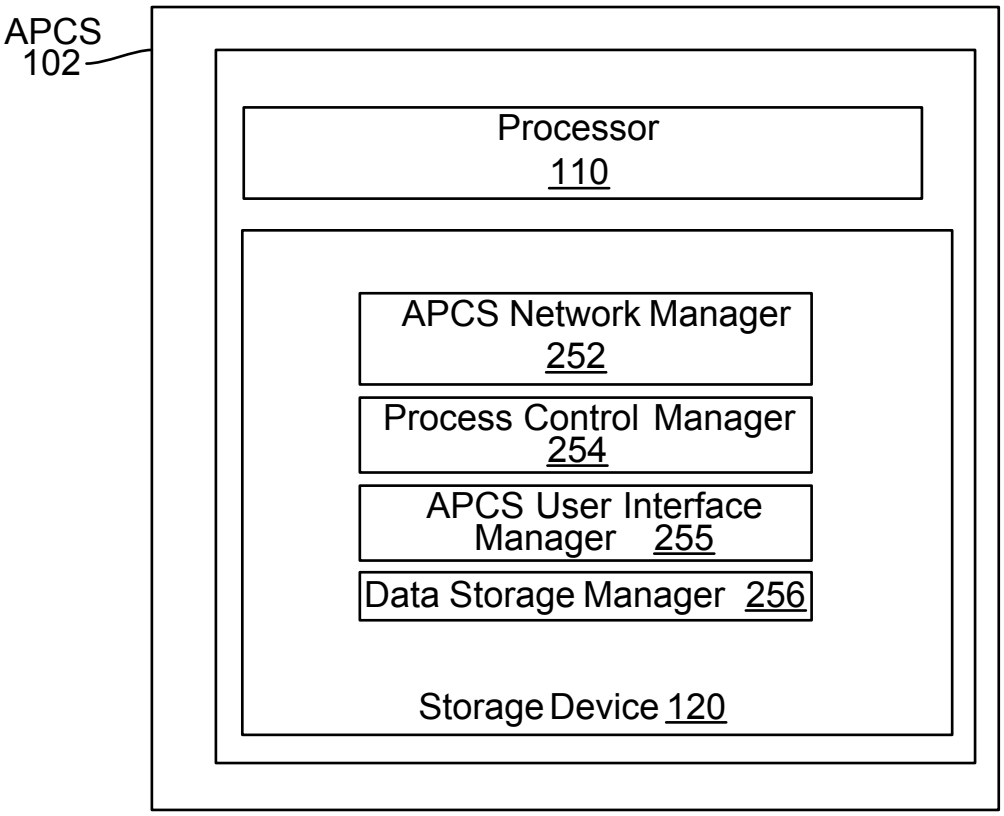
APCS
102
Processor
110
APCS Network Manager
252
Process Control Manager
254
APCS User Interface
Manager 255
Data Storage Manager 256
Storage Device 120

FIG. 8

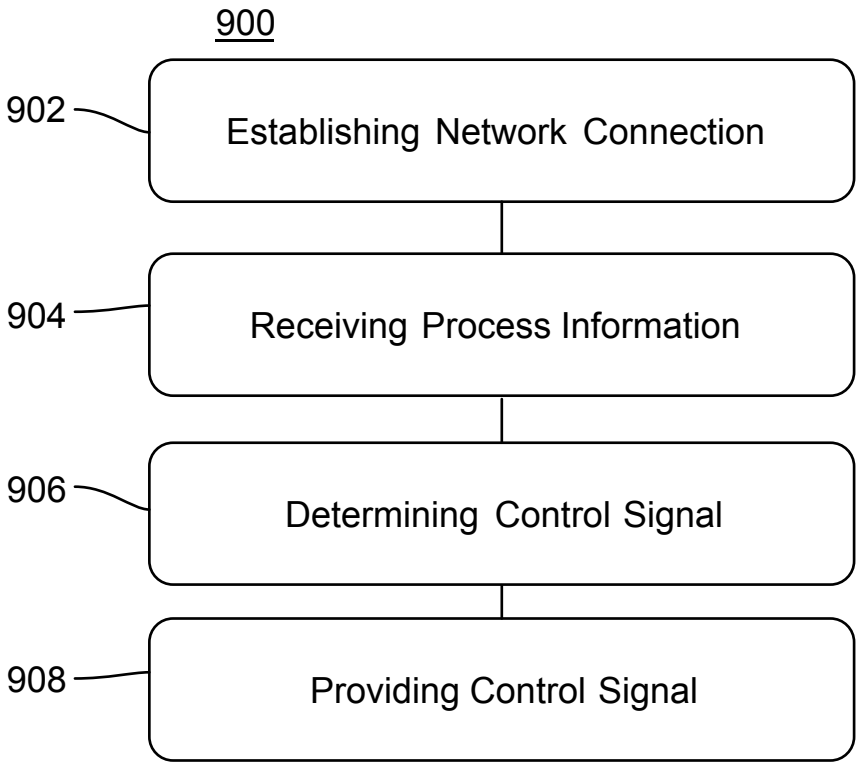
900
902
Establishing Network Connection
904
Receiving Process Information
906
Determining Control Signal
908
Providing Control Signal

FIG. 9

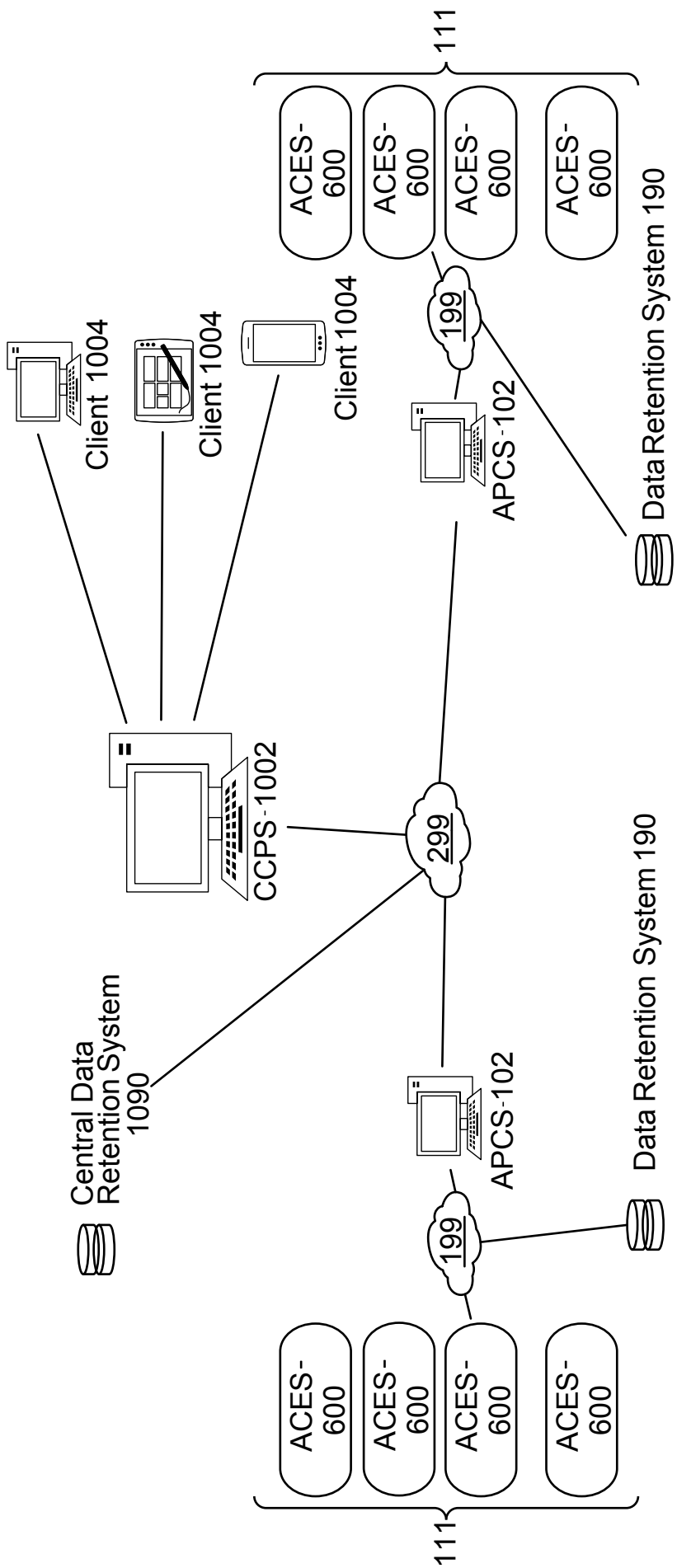
111
ACES-600
ACES-600
ACES-600
ACES-600
199
APCS-102
Data Retention System 190
Client 1004
Client 1004
Client 1004
CCPS-1002
299
Central Data Retention System 1090
APCS-102
Data Retention System 190
199
ACES-600
ACES-600
ACES-600
ACES-600
111

FIG. 10

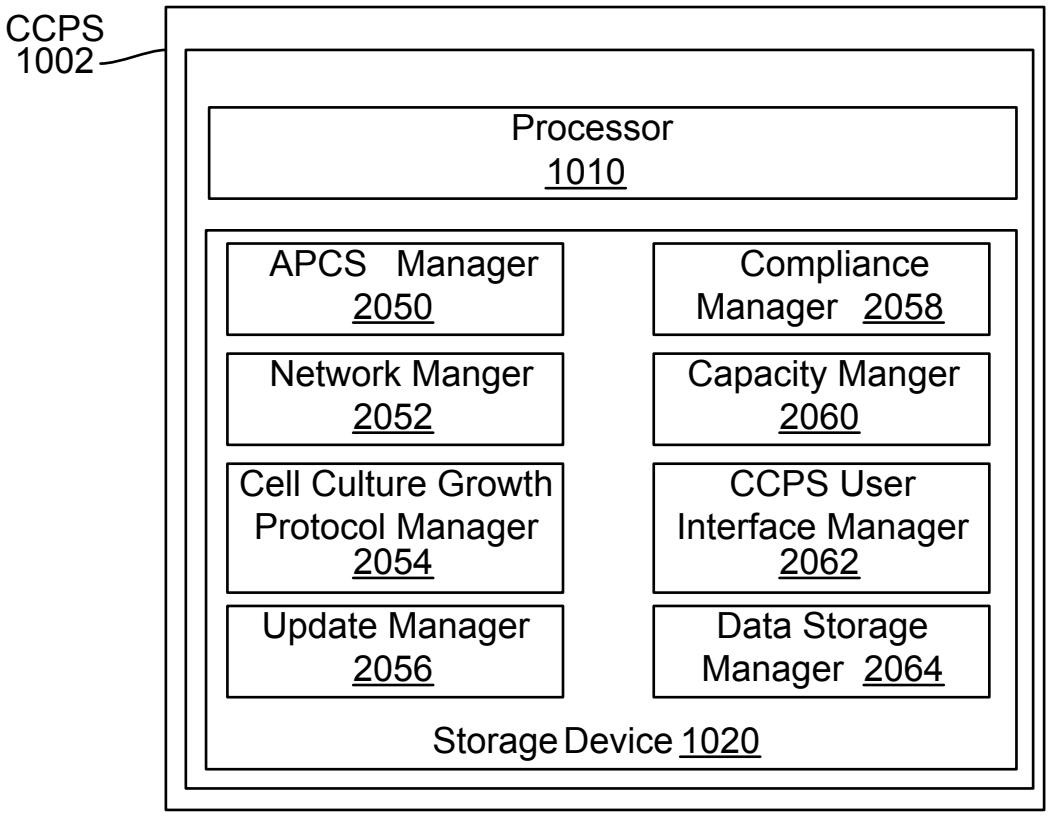
CCPS
1002
Processor
1010
APCS Manager
2050
Compliance
Manager 2058
Network Manger
2052
Capacity Manger
2060
Cell Culture Growth
Protocol Manager
2054
CCPS User
Interface Manager
2062
Update Manager
2056
Data Storage
Manager 2064
Storage Device 1020

FIG. 11

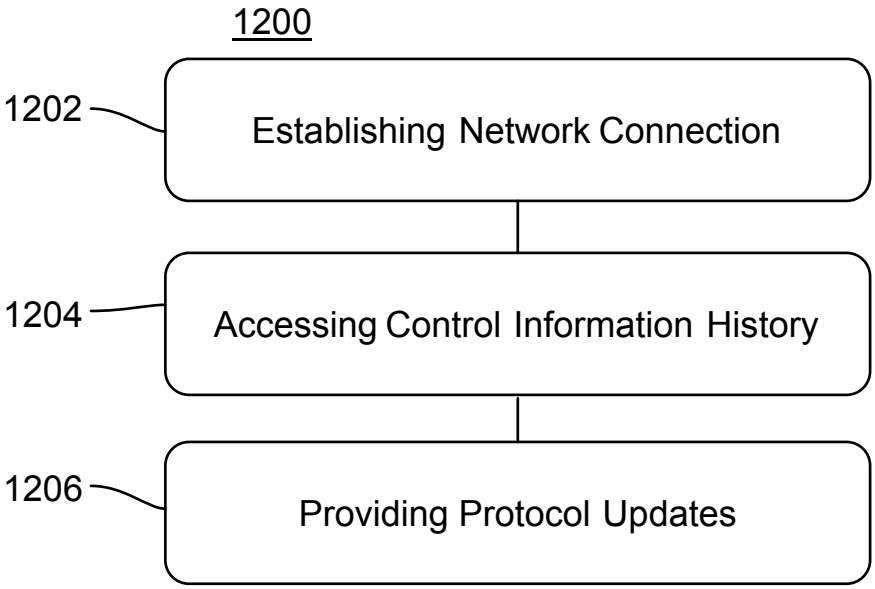
1200
1202
Establishing Network Connection
1204
Accessing Control Information History
1206
Providing Protocol Updates

FIG. 12

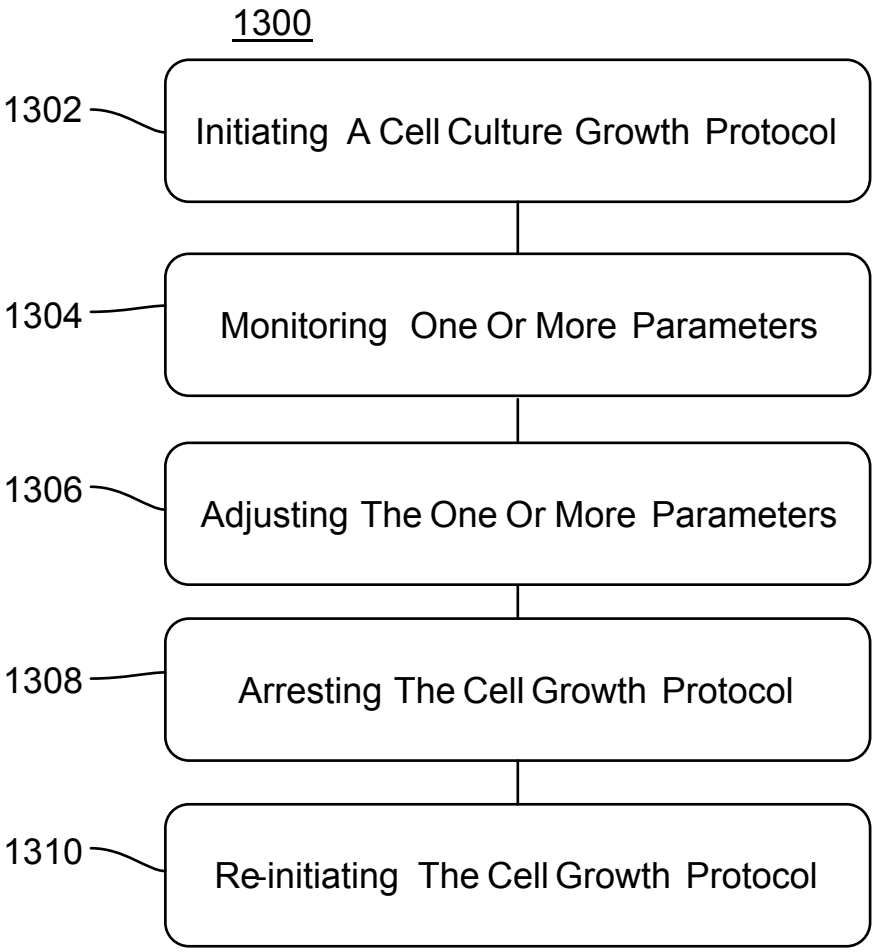
1300
1302
Initiating A Cell Culture Growth Protocol
1304
Monitoring One Or More Parameters
1306
Adjusting The One Or More Parameters
1308
Arresting The Cell Growth Protocol
1310
Re-initiating The Cell Growth Protocol

FIG. 13

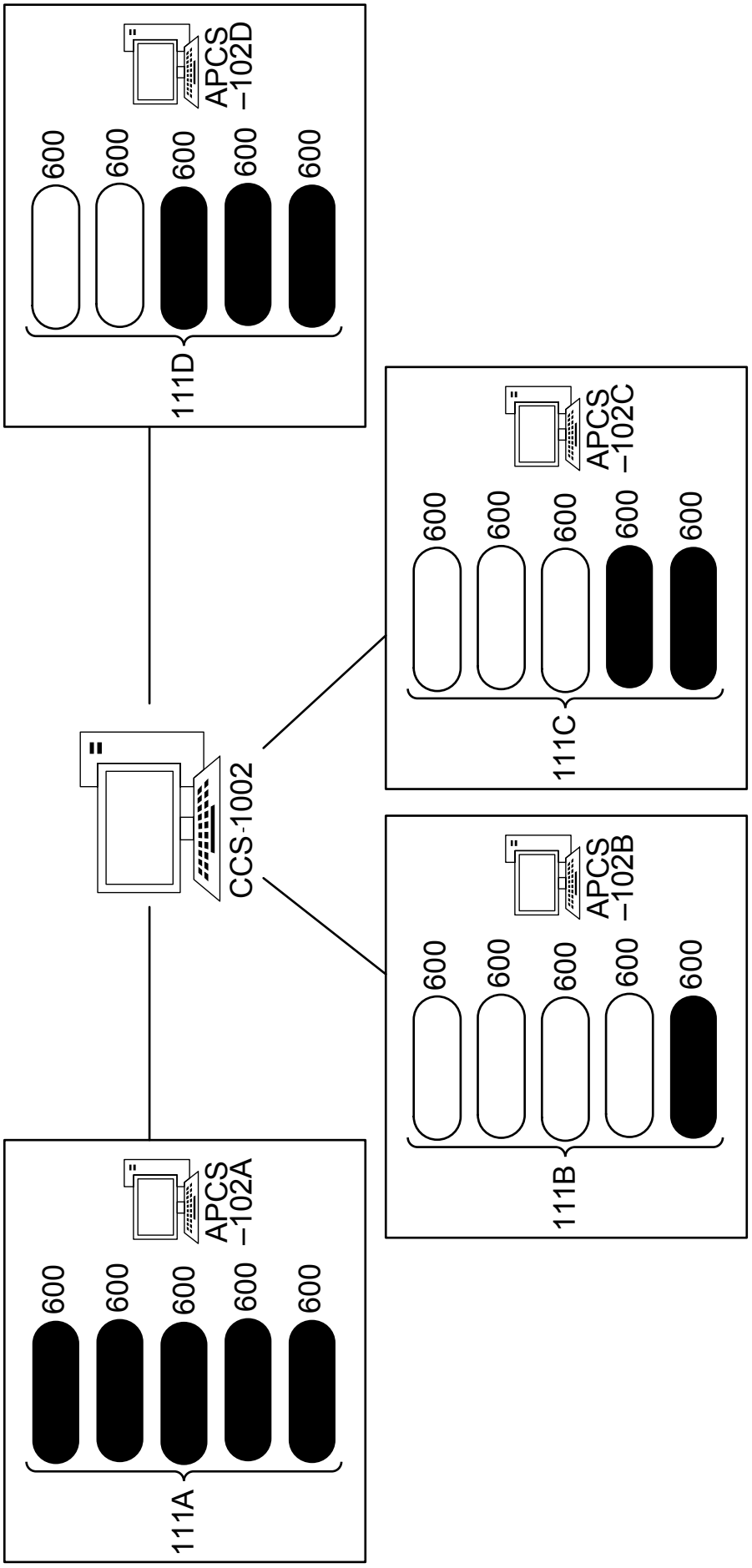
APCS –102A
600
600
600
600
600
111A
APCS –102B
600
600
600
600
600
111B
CCS-1002
APCS –102C
600
600
600
600
600
111C
APCS –102D
600
600
600
600
600
111D

FIG. 14

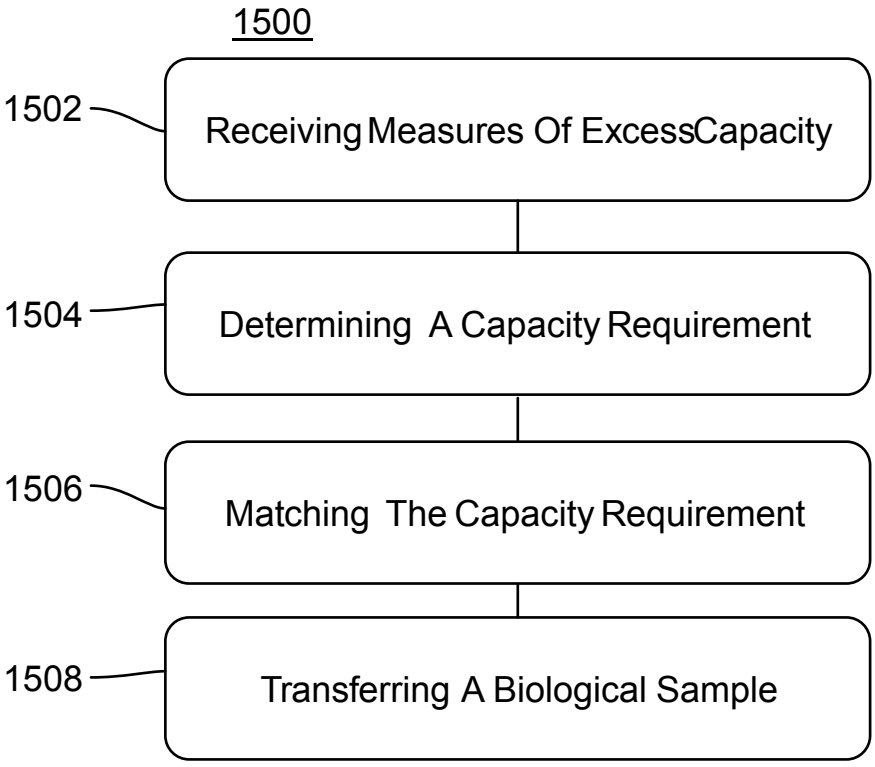
1500
1502
Receiving Measures Of Excess Capacity
1504
Determining A Capacity Requirement
1506
Matching The Capacity Requirement
1508
Transferring A Biological Sample

FIG. 15

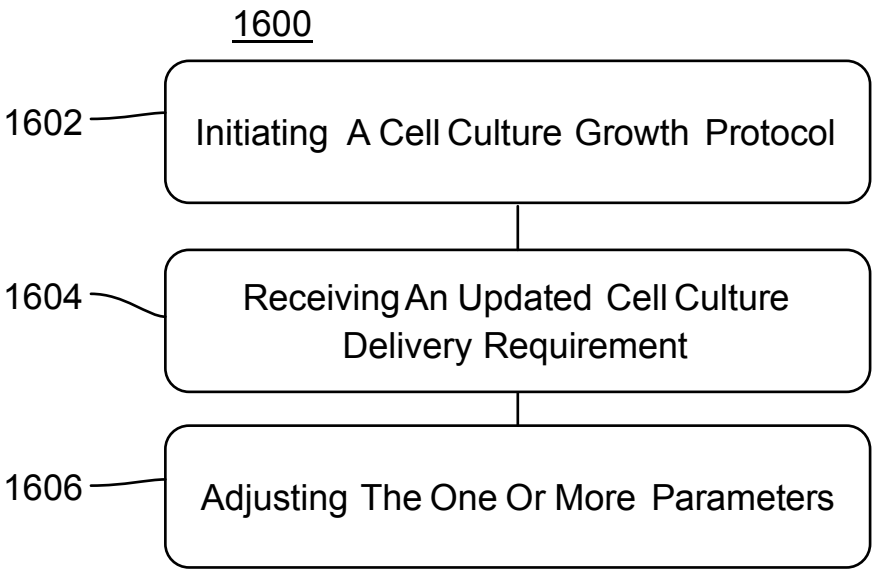
1600
1602
Initiating A Cell Culture Growth Protocol
1604
Receiving An Updated Cell Culture Delivery Requirement
1606
Adjusting The One Or More Parameters

FIG. 16

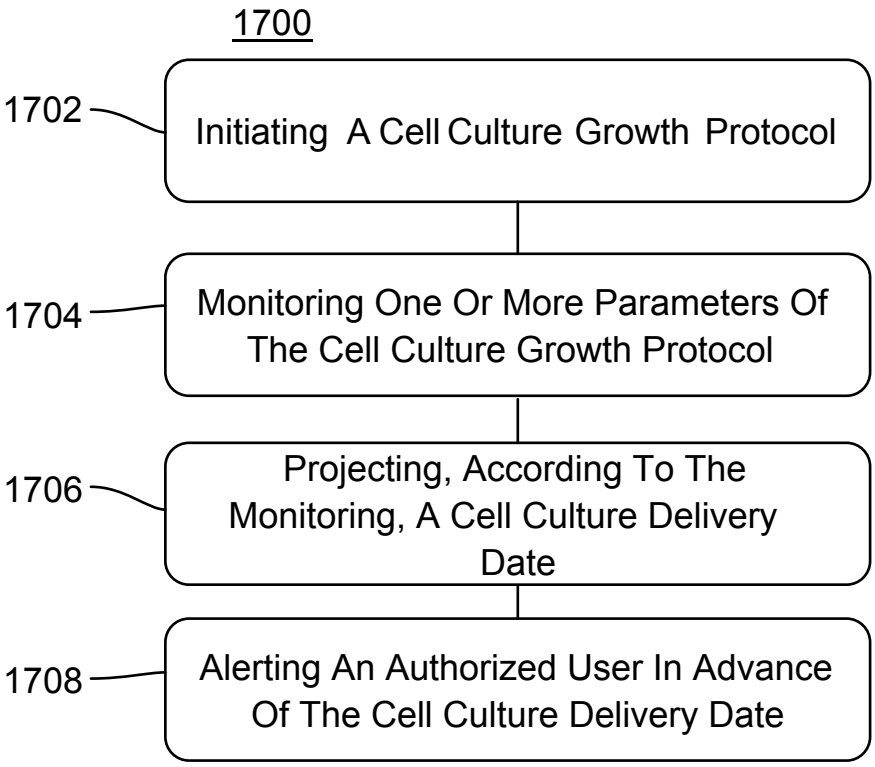
1700
1702
Initiating A Cell Culture Growth Protocol
1704
Monitoring One Or More Parameters Of The Cell Culture Growth Protocol
1706
Projecting, According To The Monitoring, A Cell Culture Delivery Date
1708
Alerting An Authorized User In Advance Of The Cell Culture Delivery Date

FIG. 17