FIG.1

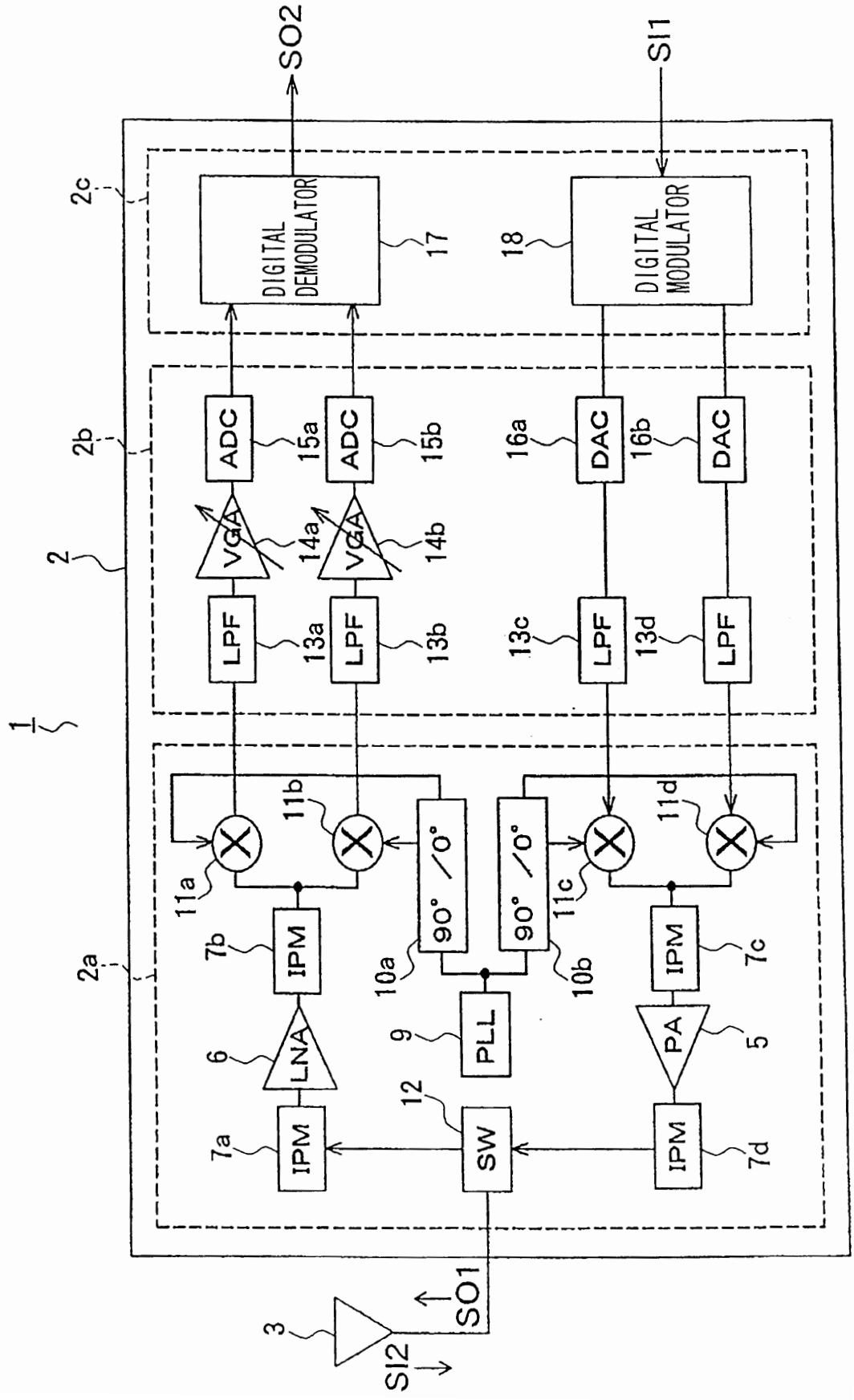
1
2
2a
2b
2c
SO2
SI1
SO1
SI2
3
DIGITAL DEMODULATOR
17
18
DIGITAL MODULATOR
ADC
15a
ADC
15b
DAC
16a
DAC
16b
VGA
14a
VGA
14b
LPF
13a
LPF
13b
LPF
13c
LPF
13d
11a
11b
11c
11d
90° /0°
10a
90° /0°
10b
IPM
7b
IPM
7c
IPM
7a
IPM
7d
LNA
6
PLL
9
PA
5
SW
12

FIG.2

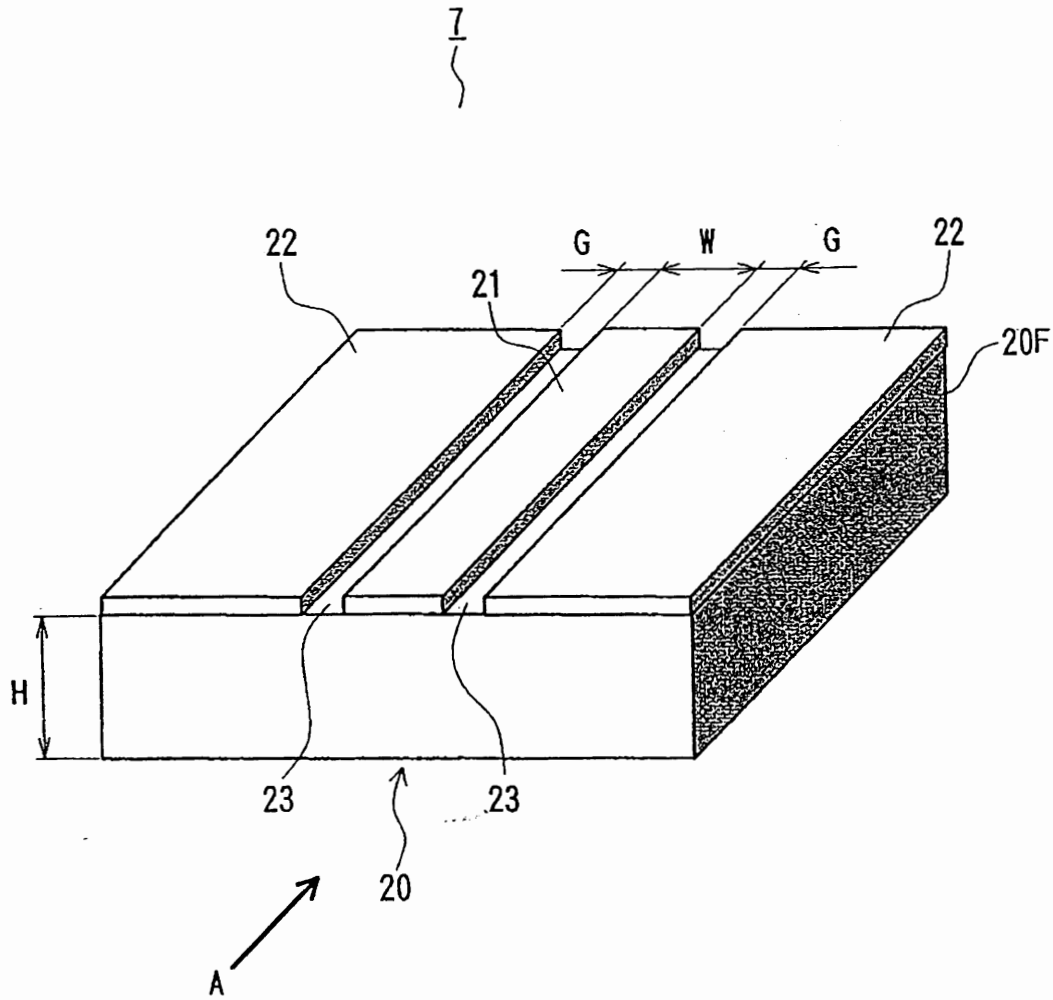

FIG.3A

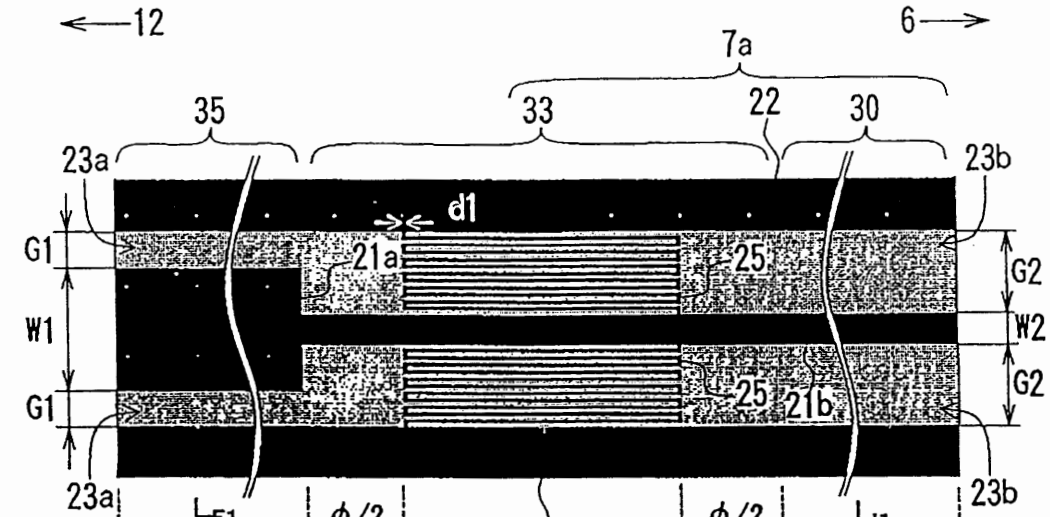

FIG.3B

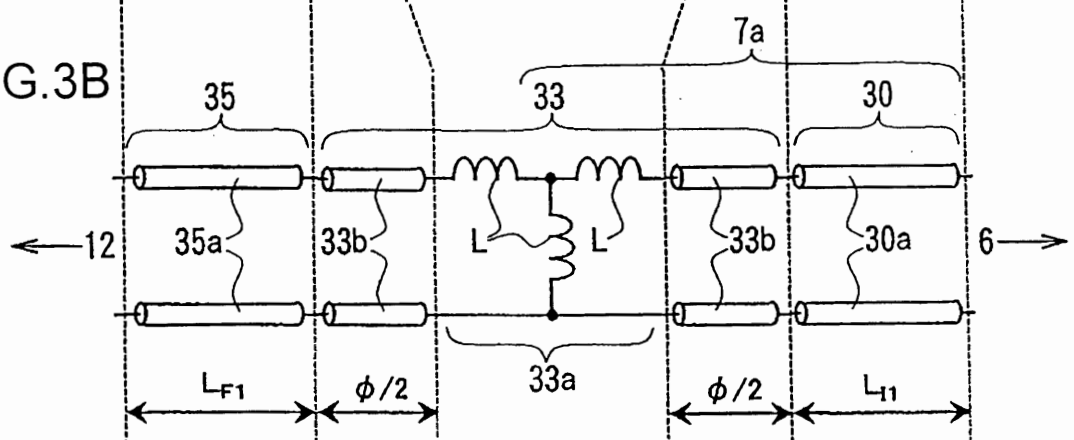

FIG.3C

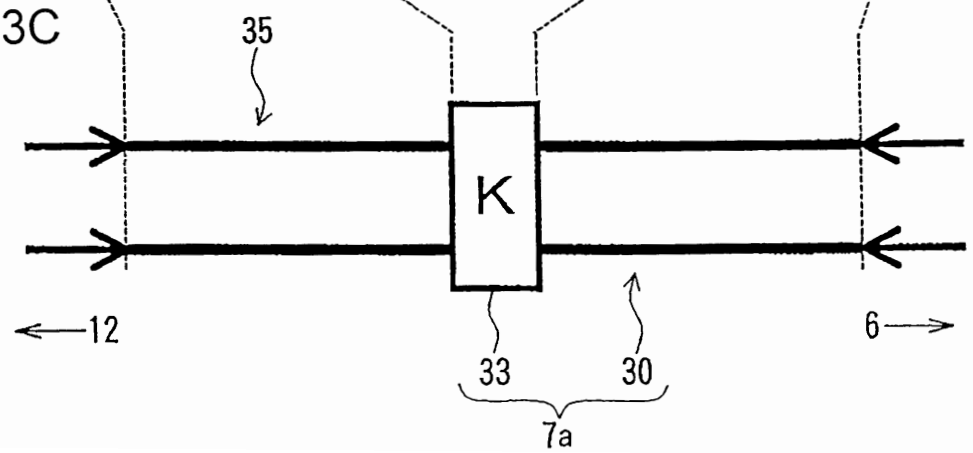

FIG.4A

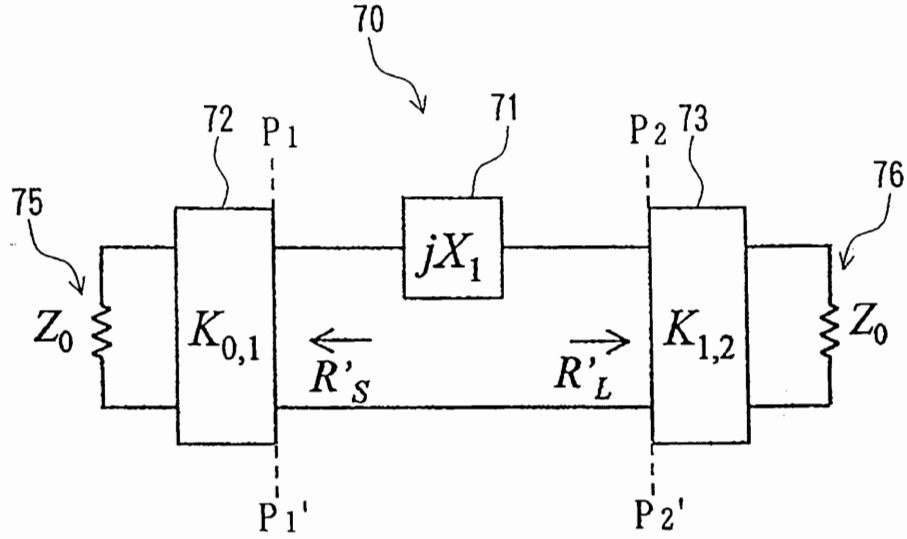

FIG.4B

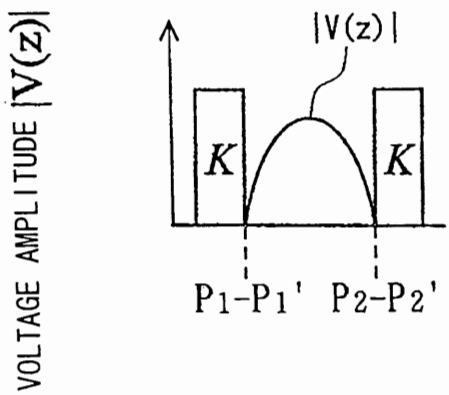

FIG.4C

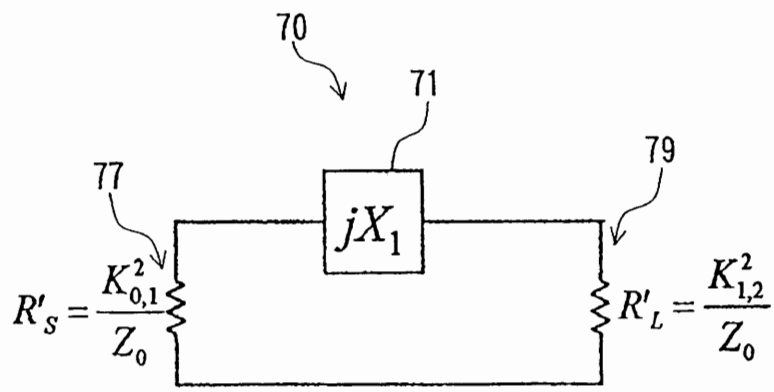

FIG.5A

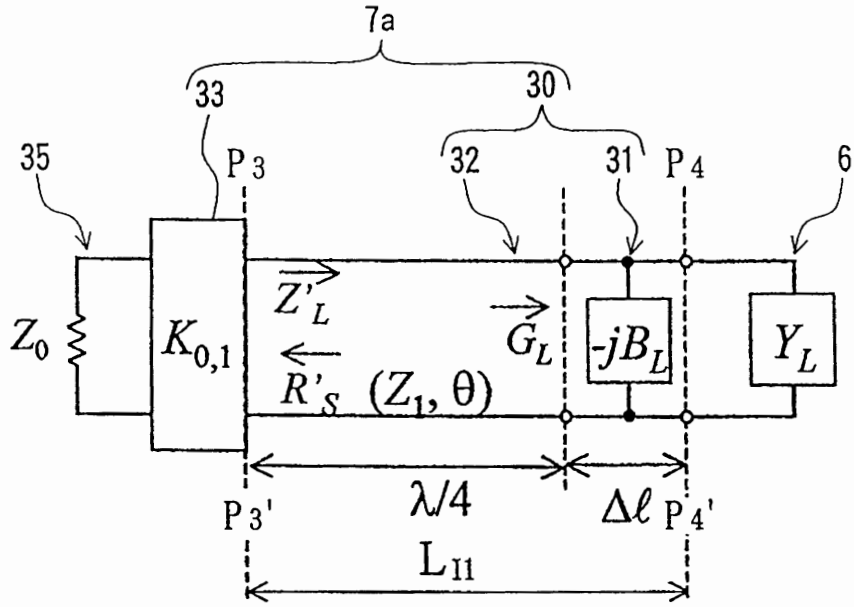

FIG.5B

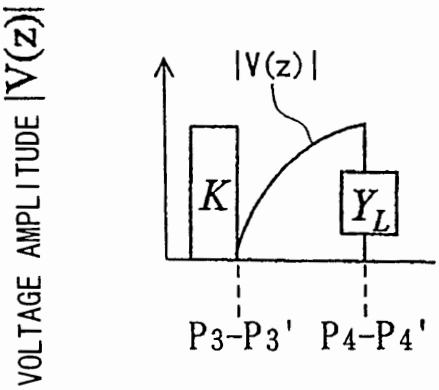

FIG.5C

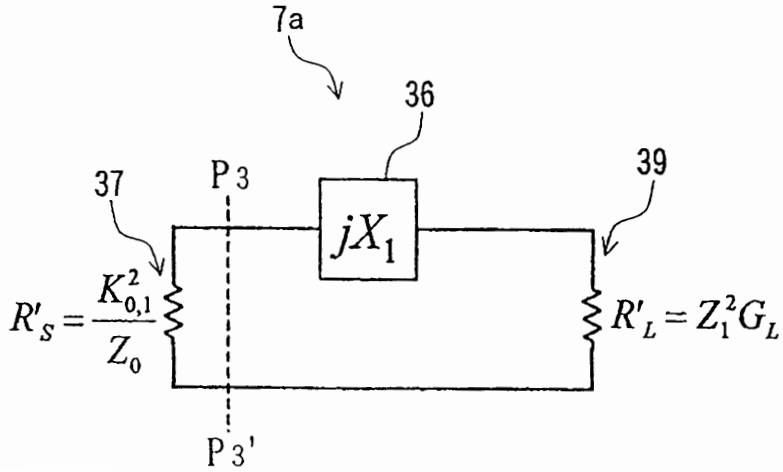

FIG.6A

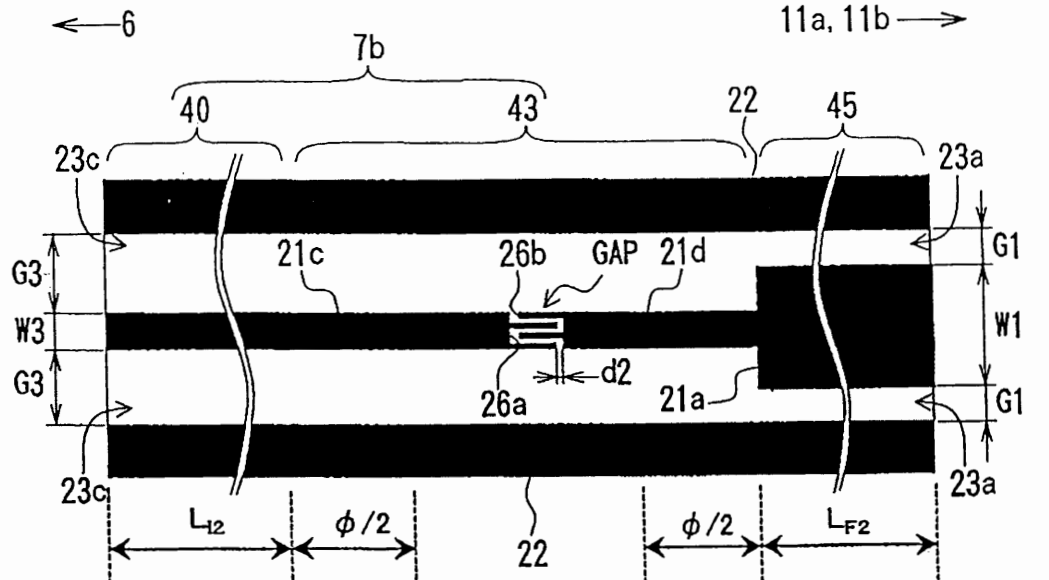

FIG.6B

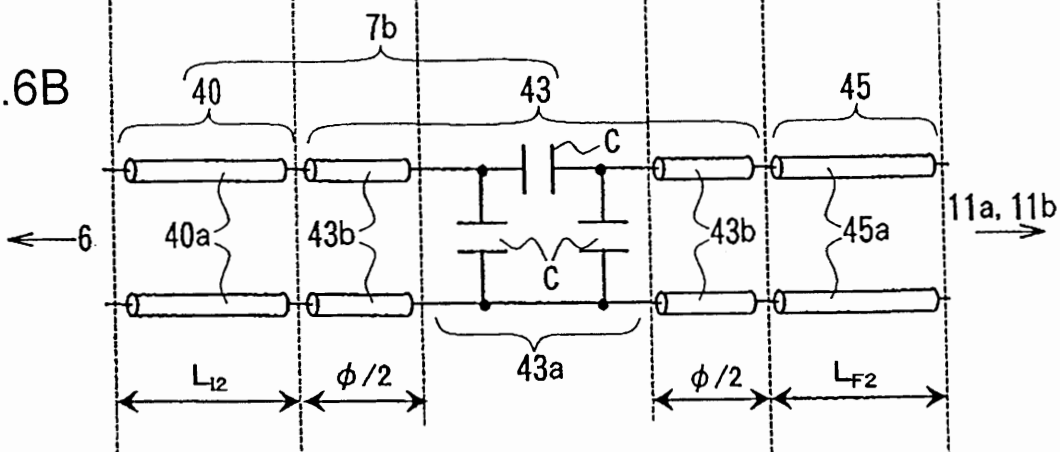

FIG.6C

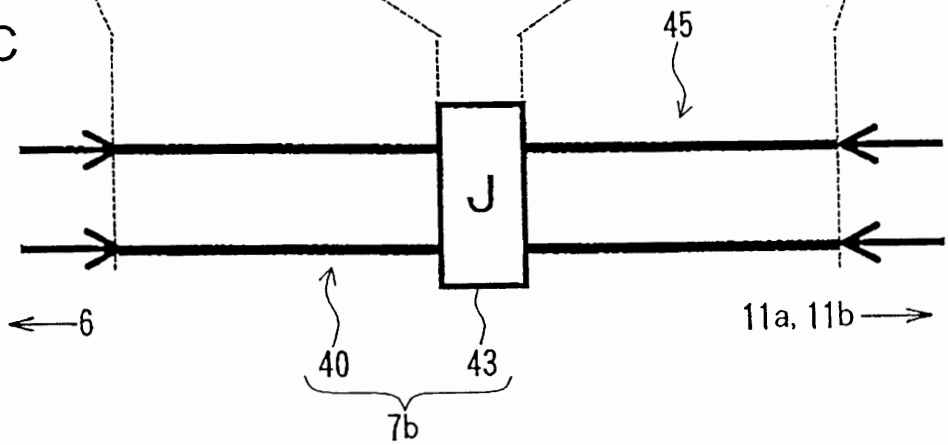

FIG.7A

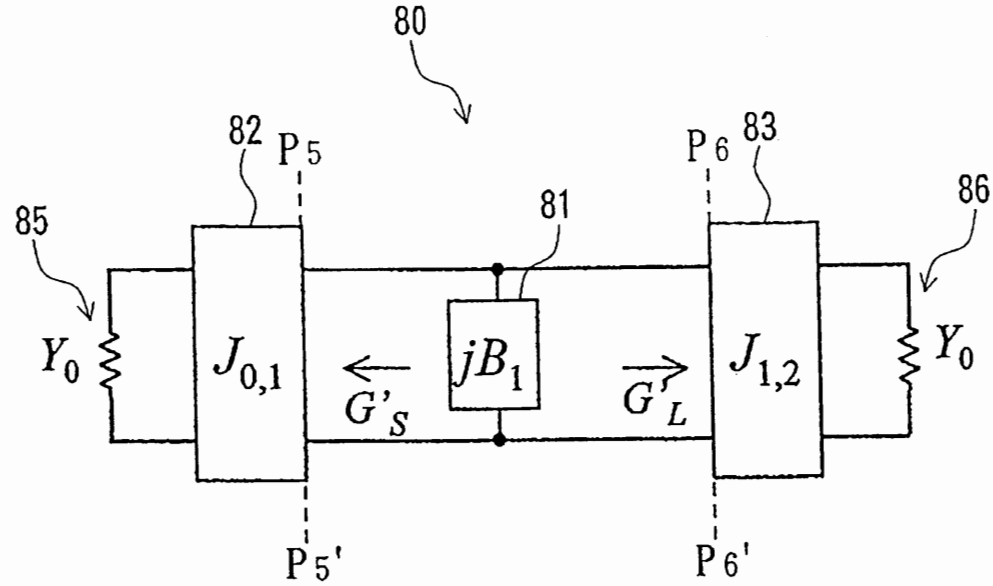

FIG.7B

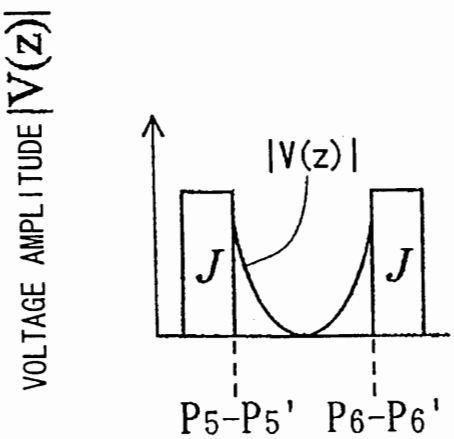

FIG.7C

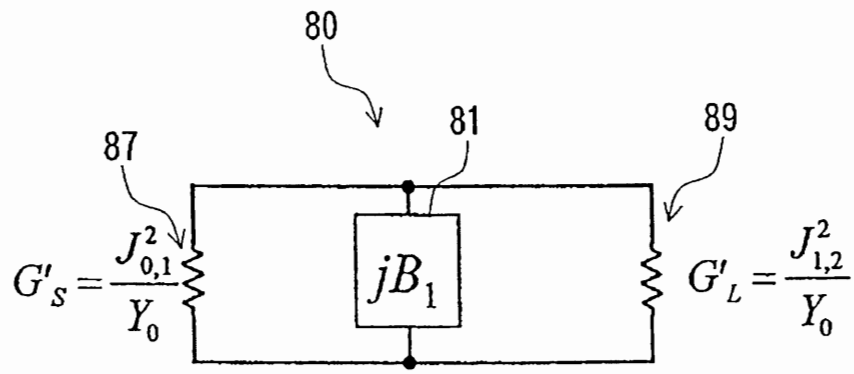

FIG.8A

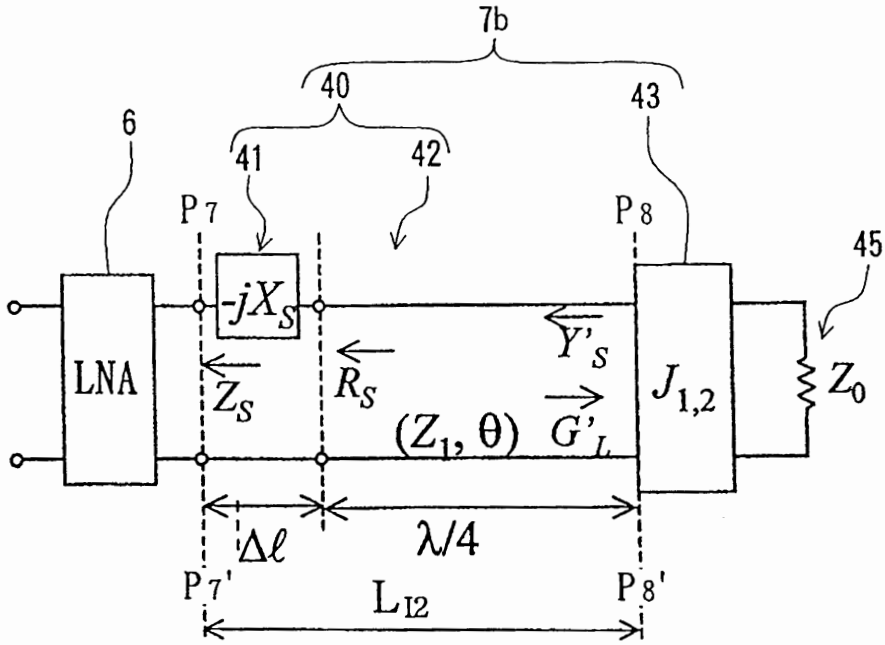

FIG.8B

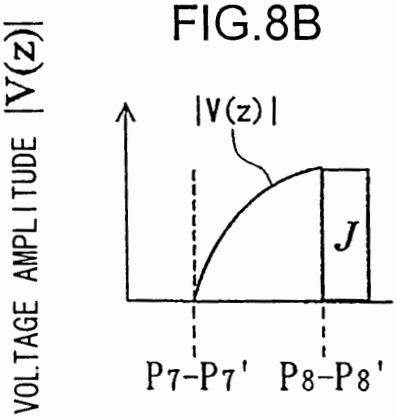

FIG.8C

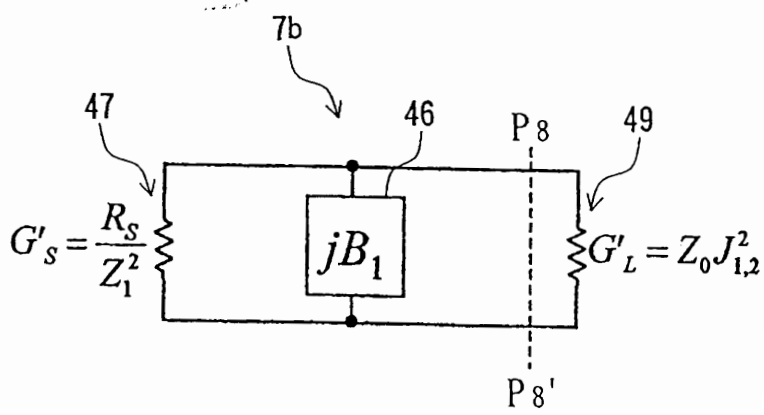

FIG.9

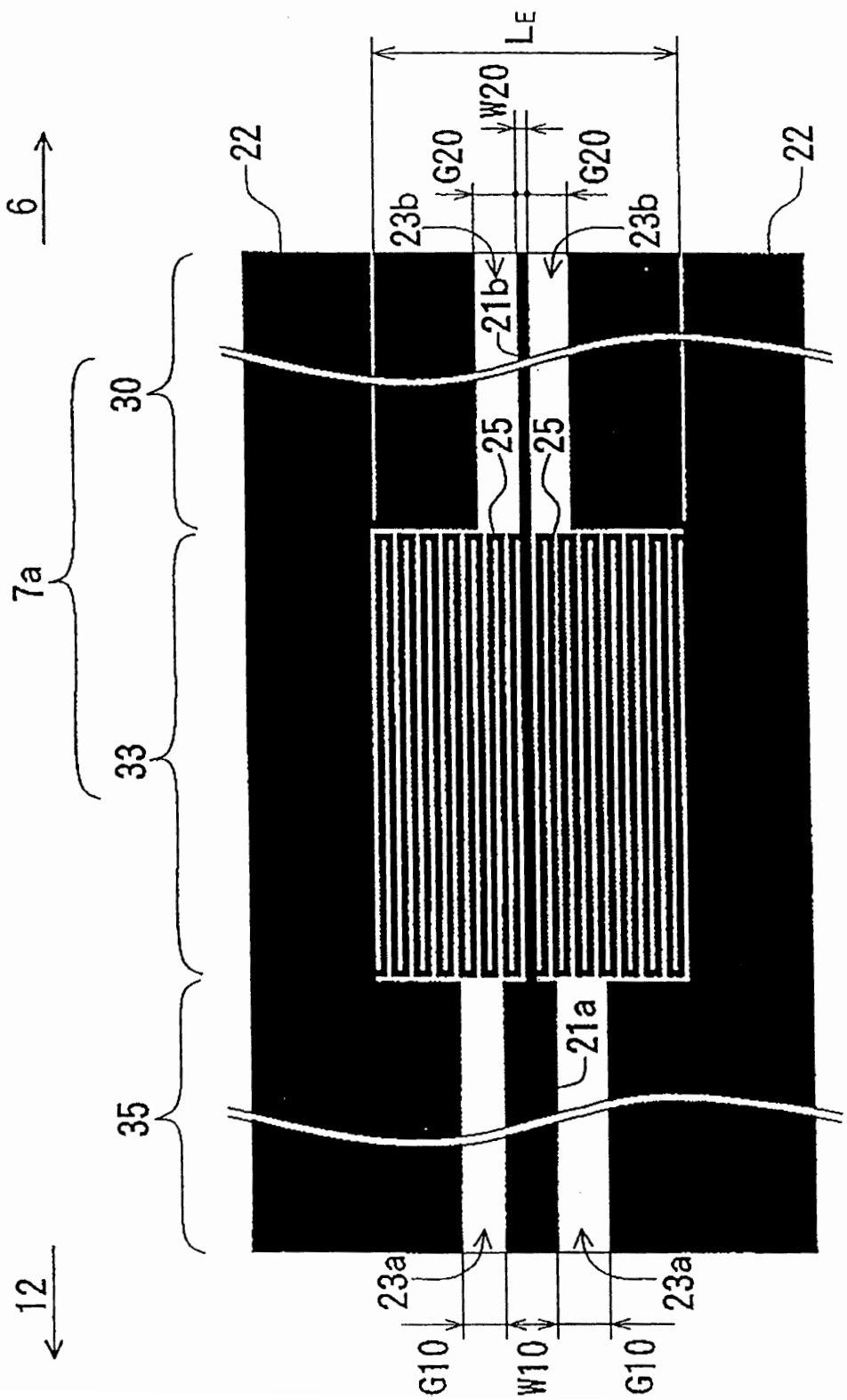
6
12
7a
30
33
35
22
22
LE
W20
G20
G20
23b
23b
21b
25
25
21a
23a
23a
G10
W10
G10

FIG.10A

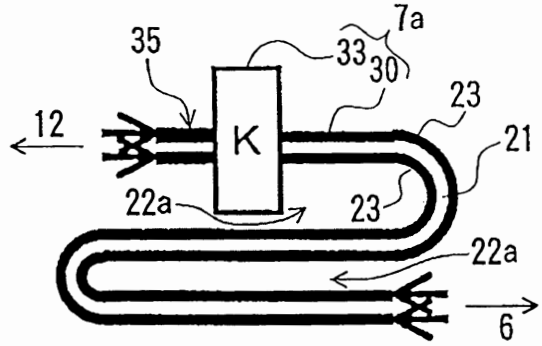

FIG.10B

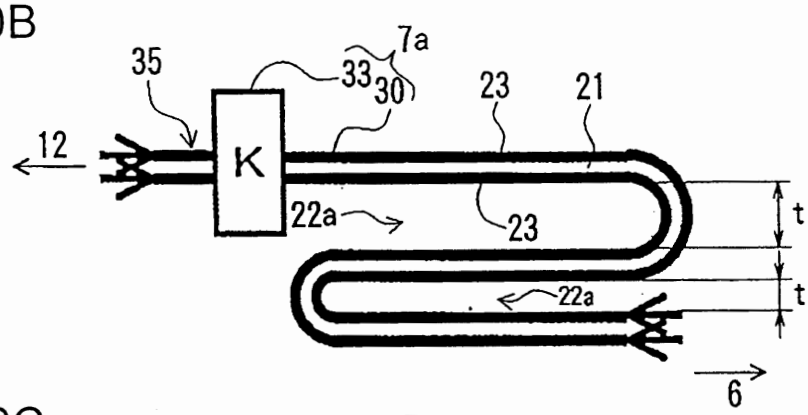

FIG.10C

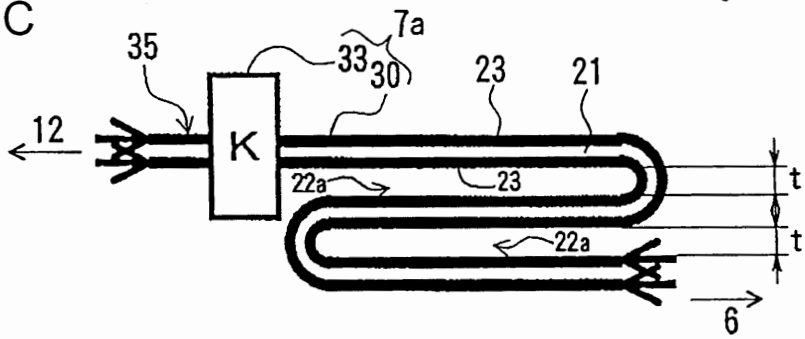

FIG.10D

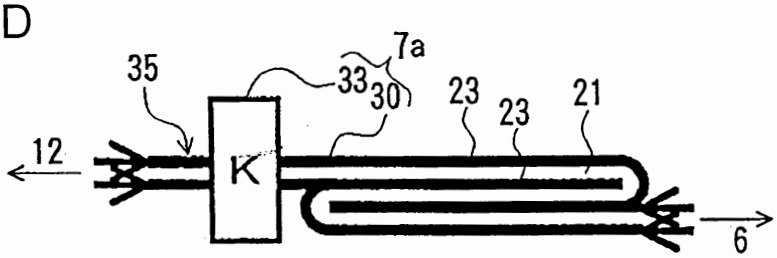

FIG.10E

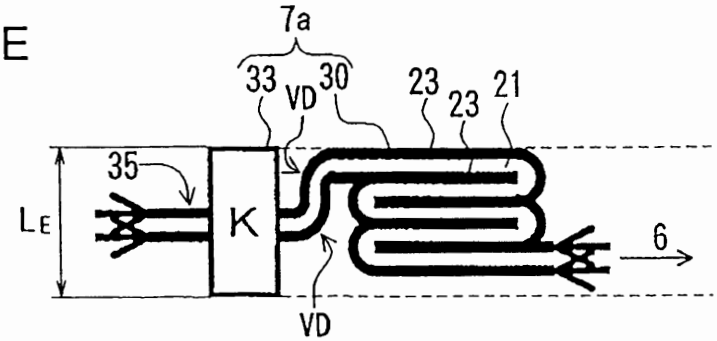

FIG.11A

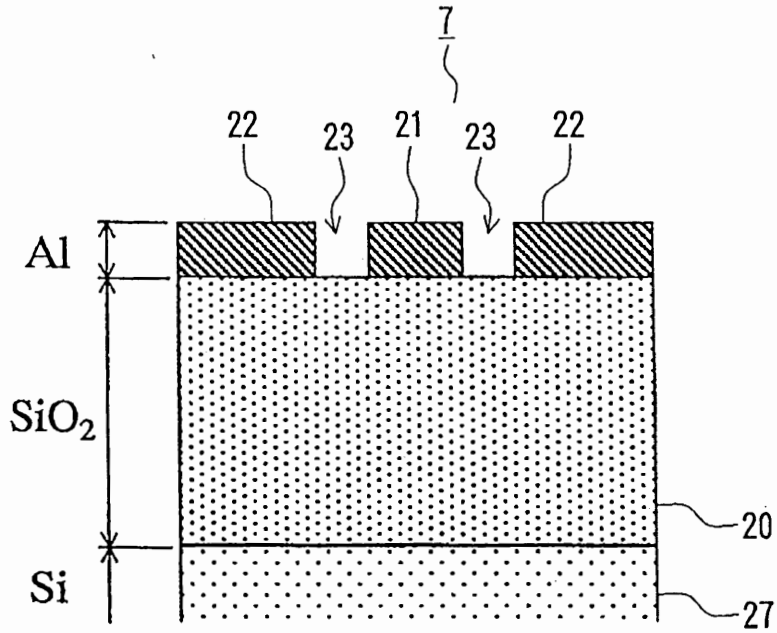

Qu=20

FIG.11B

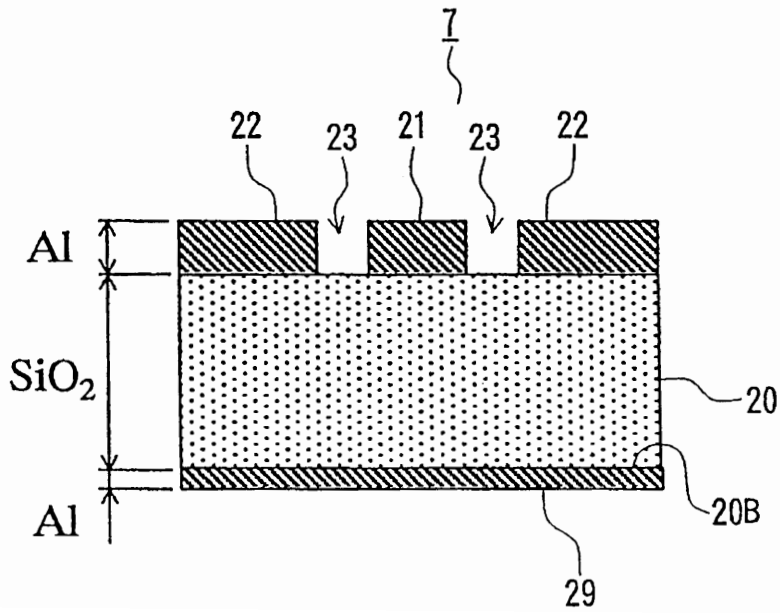

Qu=39

FIG.12A

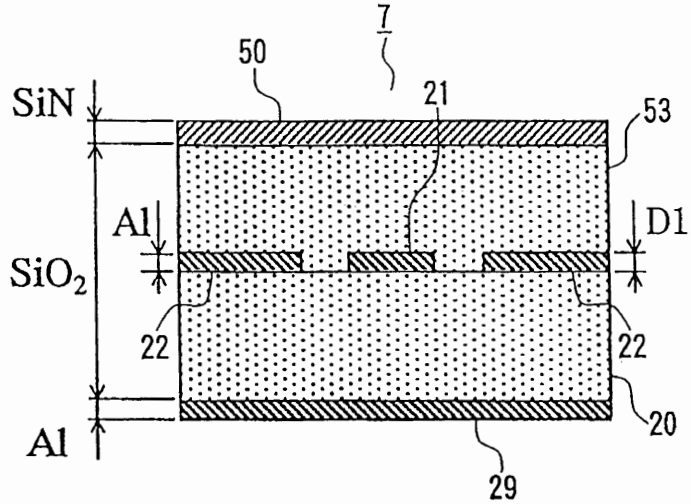

Qu=33

FIG.12B

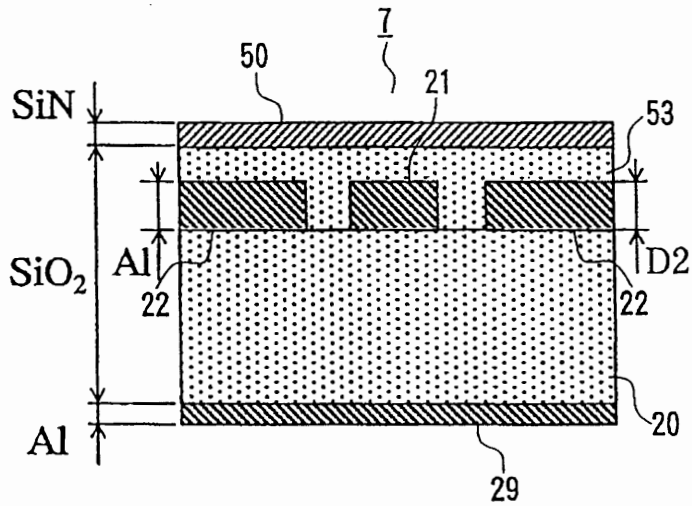

Qu=64

FIG.12C

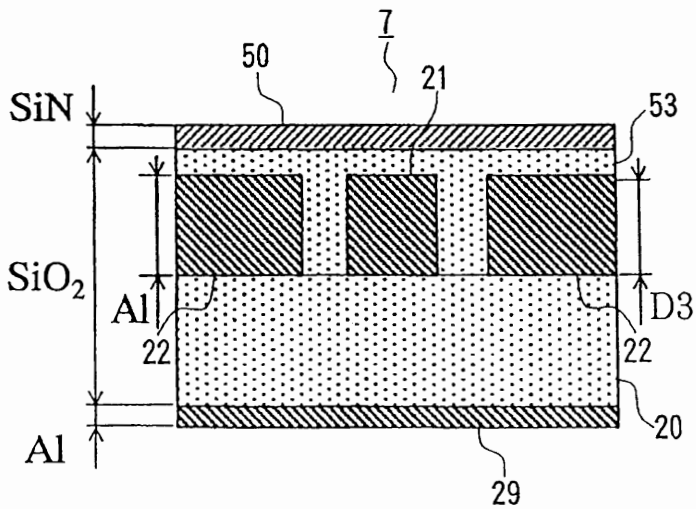

Qu=68

FIG.13

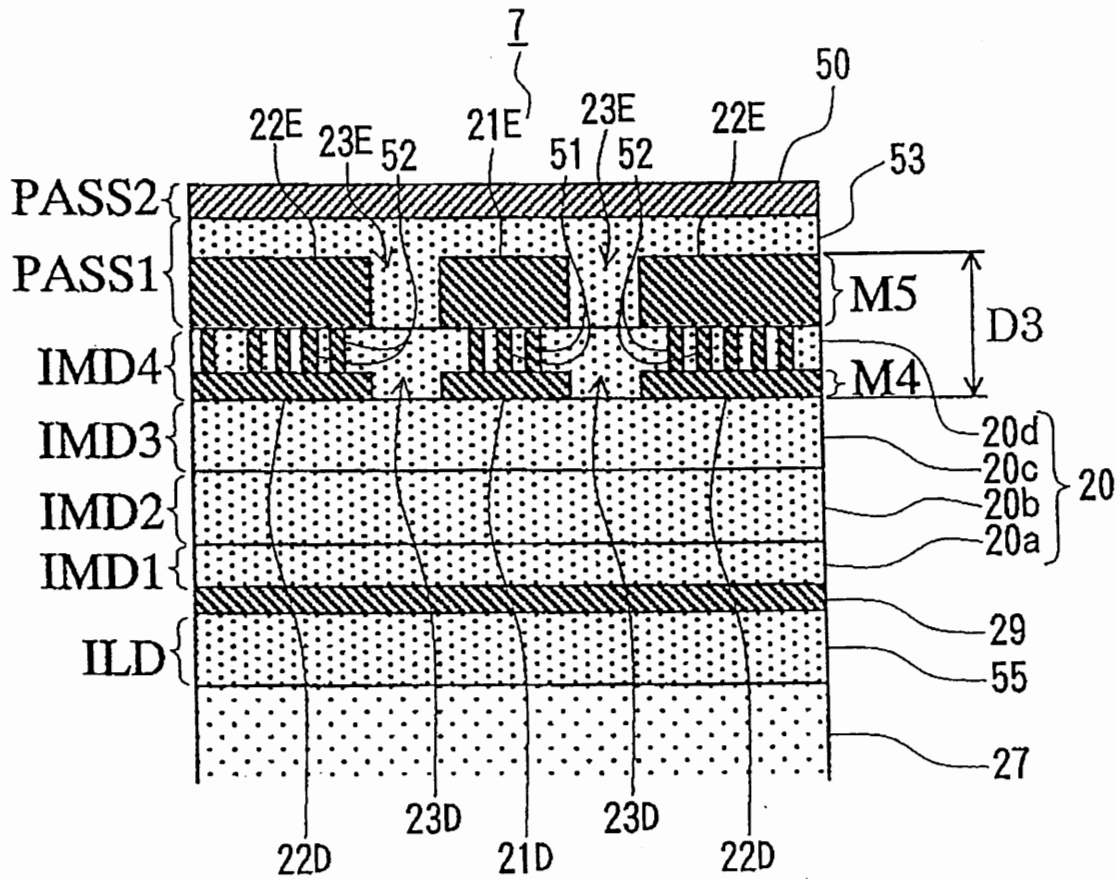
7
50
22E
23E
52
21E
51
23E
52
22E
53
PASS2
PASS1
IMD4
IMD3
IMD2
IMD1
ILD
M5
M4
D3
20d
20c
20b
20a
20
29
55
27
22D
23D
21D
23D
22D

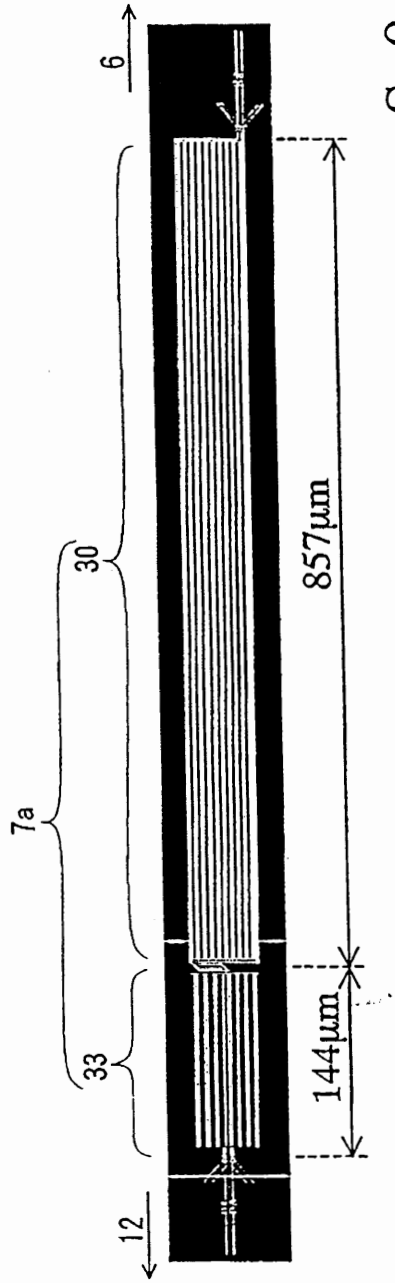

$S=0.09mm^2$

FIG.14A

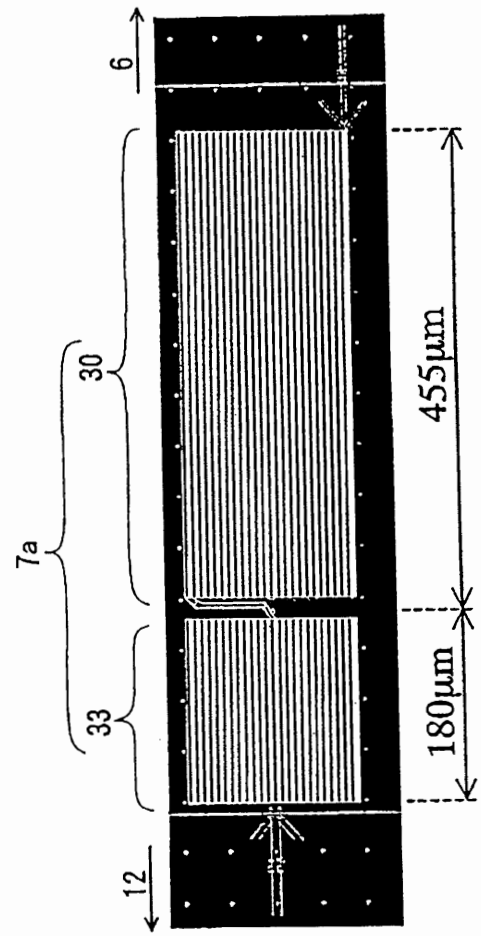

$S=0.12mm^2$

FIG.14B

FIG.15

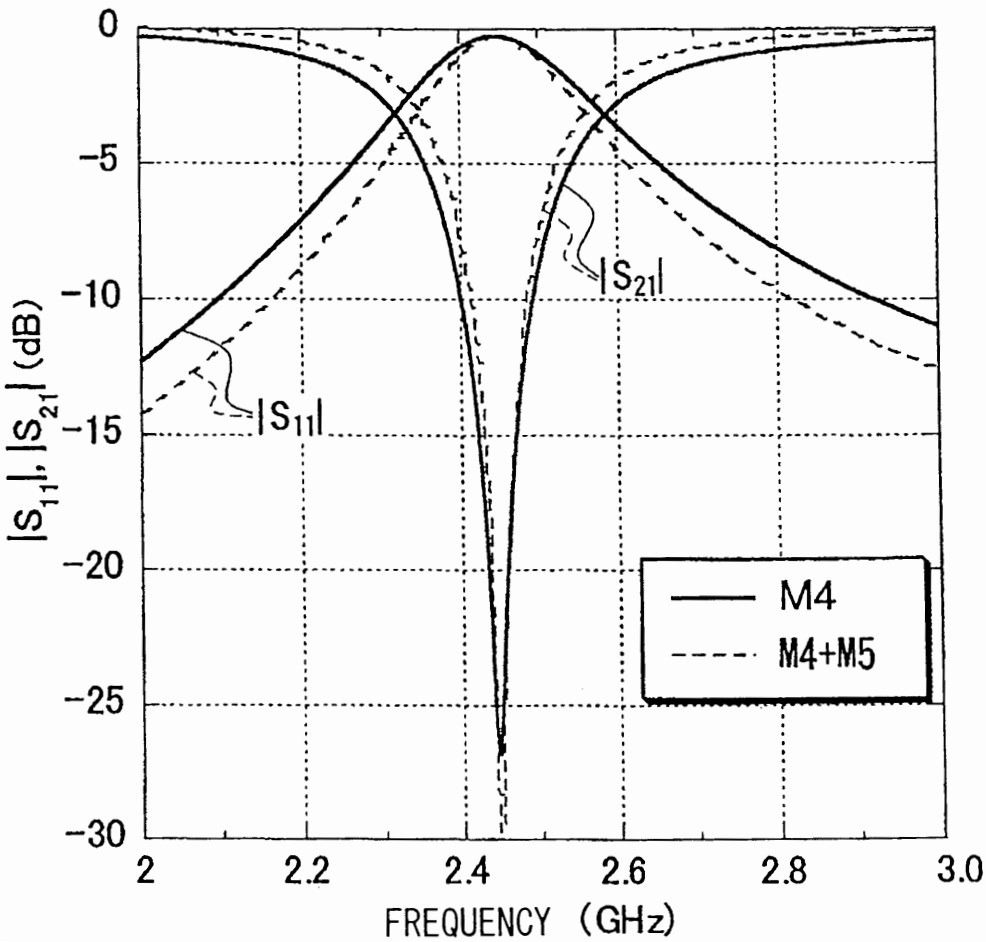
0
-5
-10
-15
-20
-25
-30
2
2.2
2.4
2.6
2.8
3.0
FREQUENCY (GHz)
|S11|, |S21| (dB)
|S11|
|S21|
M4
M4+M5

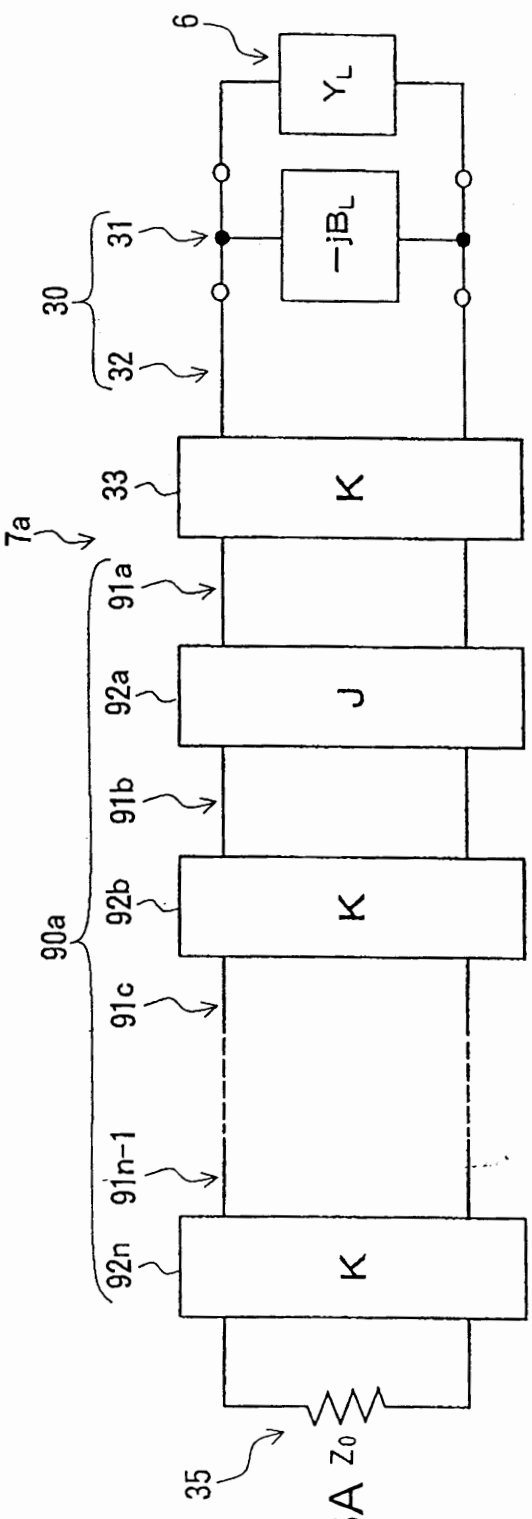

FIG.16A

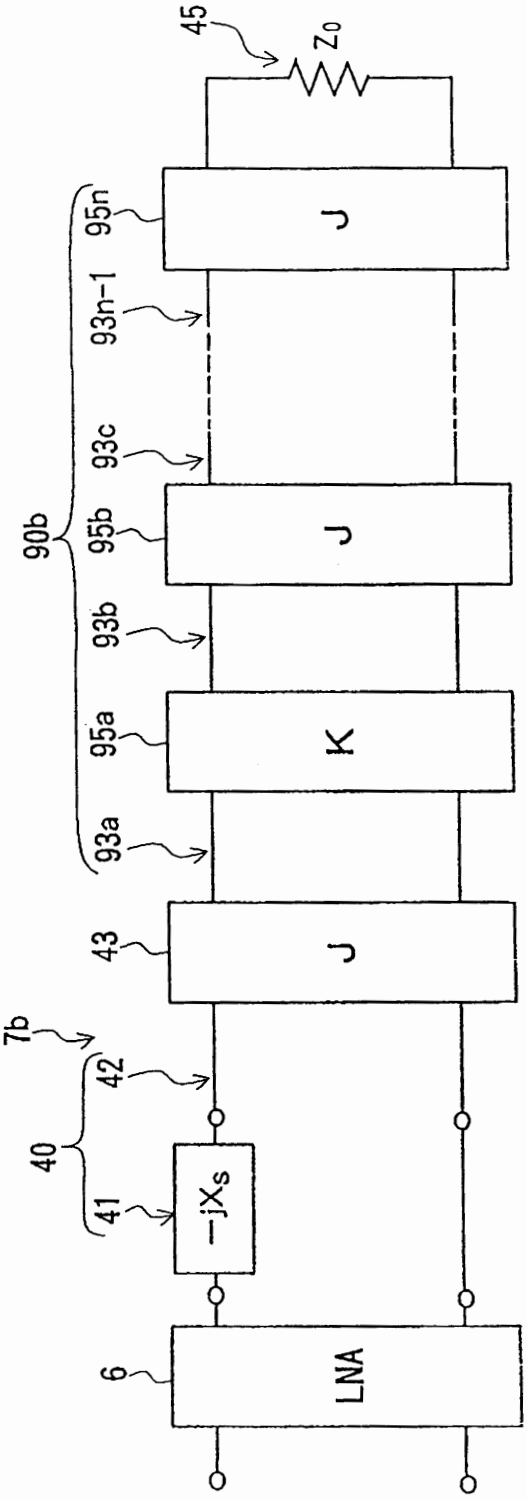

FIG.16B

FIG.17

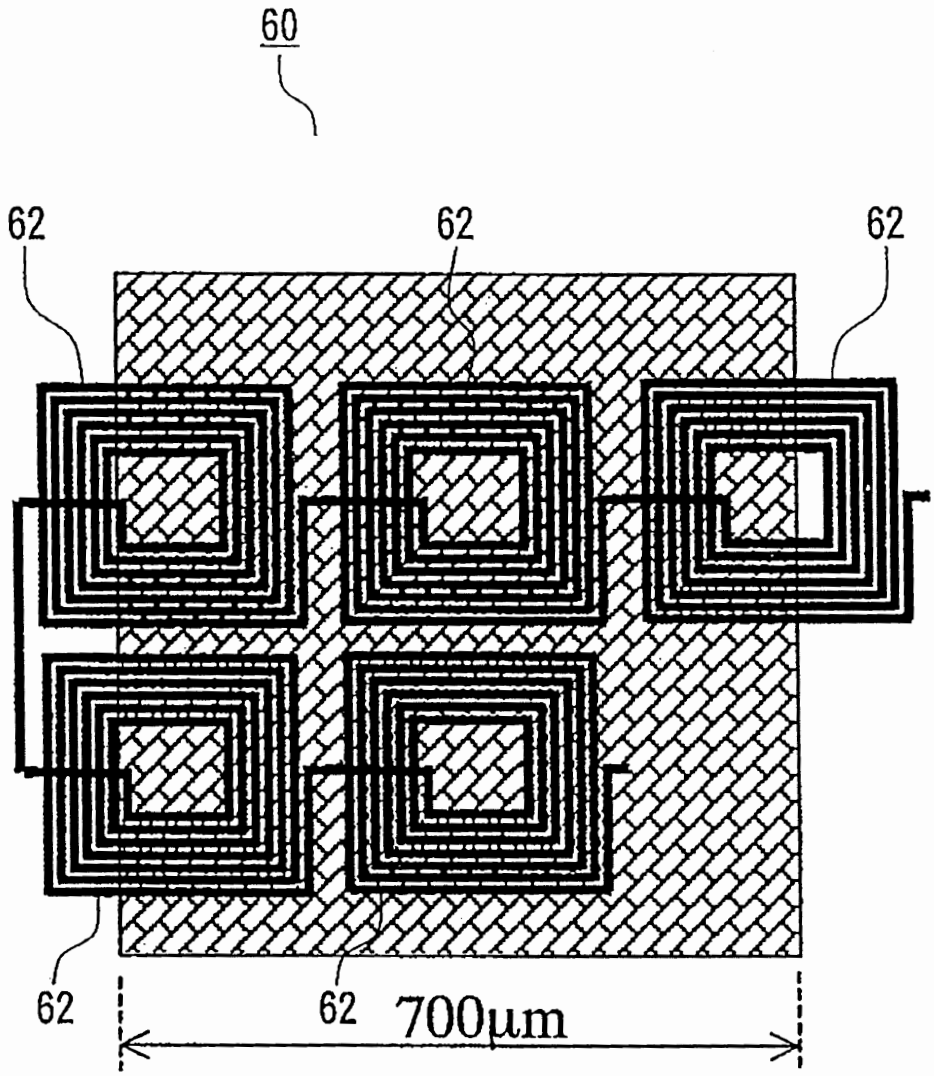

$S=0.5nm^2$