(12) INTERNATIONAL APPLICATION PUBLISHED UNDER THE PATENT COOPERATION TREATY (PCT)

(19) World Intellectual Property Organization
International Bureau

(43) International Publication Date
27 October 2005 (27.10.2005)

PCT

(10) International Publication Number
WO 2005/100537 A1

(51) International Patent Classification[7]: C12M 1/34, 1/26, 3/00, 3/06, 3/08

(21) International Application Number: PCT/SG2005/000121

(22) International Filing Date: 12 April 2005 (12.04.2005)

(25) Filing Language: English

(26) Publication Language: English

(30) Priority Data:
10/823,164 13 April 2004 (13.04.2004) US

(71) Applicant *(for all designated States except US)*: **AGENCY FOR SCIENCE, TECHNOLOGY AND RESEARCH** [SG/SG]; 20 Biopolis Way, #07-01 Centros, Singapore 138668 (SG).

(72) Inventors; and

(75) Inventors/Applicants *(for US only)*: **MUTHIAH, Manimaran** [IN/SG]; 66 Toh Tuck Road, #03-08, Singapore 596730 (SG). **TAY, Eng-Hock, Francis** [SG/SG]; 12 Kent Ridge Drive, Temasek Hall, NUS, Singapore 119243 (SG). **MAO, Pei, Lin** [CA/SG]; 2B Hong San Walk #16-01, Palm Garden, Singapore 689048 (SG). **CHU, Yi, Leonard**; 3F-1, No. 178 Min Sheng East Road, Sec 5, Taipei 105, Taiwan (TW).

(74) Agent: **VIERING, JENTSCHURA & PARTNER**; P.O. Box 1088, Rochor Post Office, Rochor Road, Singapore 911833 (SG).

(81) Designated States *(unless otherwise indicated, for every kind of national protection available)*: AE, AG, AL, AM, AT, AU, AZ, BA, BB, BG, BR, BW, BY, BZ, CA, CH, CN, CO, CR, CU, CZ, DE, DK, DM, DZ, EC, EE, EG, ES, FI, GB, GD, GE, GH, GM, HR, HU, ID, IL, IN, IS, JP, KE, KG, KM, KP, KR, KZ, LC, LK, LR, LS, LT, LU, LV, MA, MD, MG, MK, MN, MW, MX, MZ, NA, NI, NO, NZ, OM, PG, PH, PL, PT, RO, RU, SC, SD, SE, SG, SK, SL, SM, SY, TJ, TM, TN, TR, TT, TZ, UA, UG, US, UZ, VC, VN, YU, ZA, ZM, ZW.

(84) Designated States *(unless otherwise indicated, for every kind of regional protection available)*: ARIPO (BW, GH, GM, KE, LS, MW, MZ, NA, SD, SL, SZ, TZ, UG, ZM, ZW), Eurasian (AM, AZ, BY, KG, KZ, MD, RU, TJ, TM), European (AT, BE, BG, CH, CY, CZ, DE, DK, EE, ES, FI, FR, GB, GR, HU, IE, IS, IT, LT, LU, MC, NL, PL, PT, RO, SE, SI, SK, TR), OAPI (BF, BJ, CF, CG, CI, CM, GA, GN, GQ, GW, ML, MR, NE, SN, TD, TG).

Published:
— *with international search report*

For two-letter codes and other abbreviations, refer to the "Guidance Notes on Codes and Abbreviations" appearing at the beginning of each regular issue of the PCT Gazette.

(54) Title: DEVICE AND METHOD FOR STUDYING CELL MIGRATION AND DEFORMATION

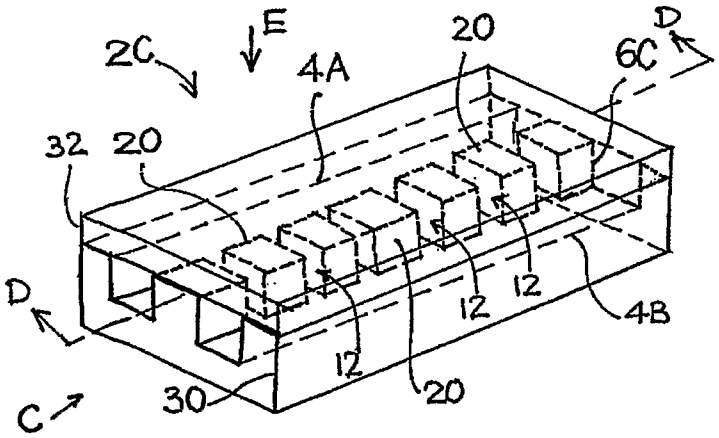

(57) Abstract: A device for studying cell migration and deformation, a method of manufacturing and using the device. The device includes at least two channels defined therein. The two channels are separated by a partitioning wall therebetween. Each channel has an inlet and an outlet. At least one through passage is defined in the partitioning wall to allow fluid communication between the two channels. The method of manufacturing includes molding a substrate having the channels and passage defined therein and covering the substrate with a cover.

WO 2005/100537 A1