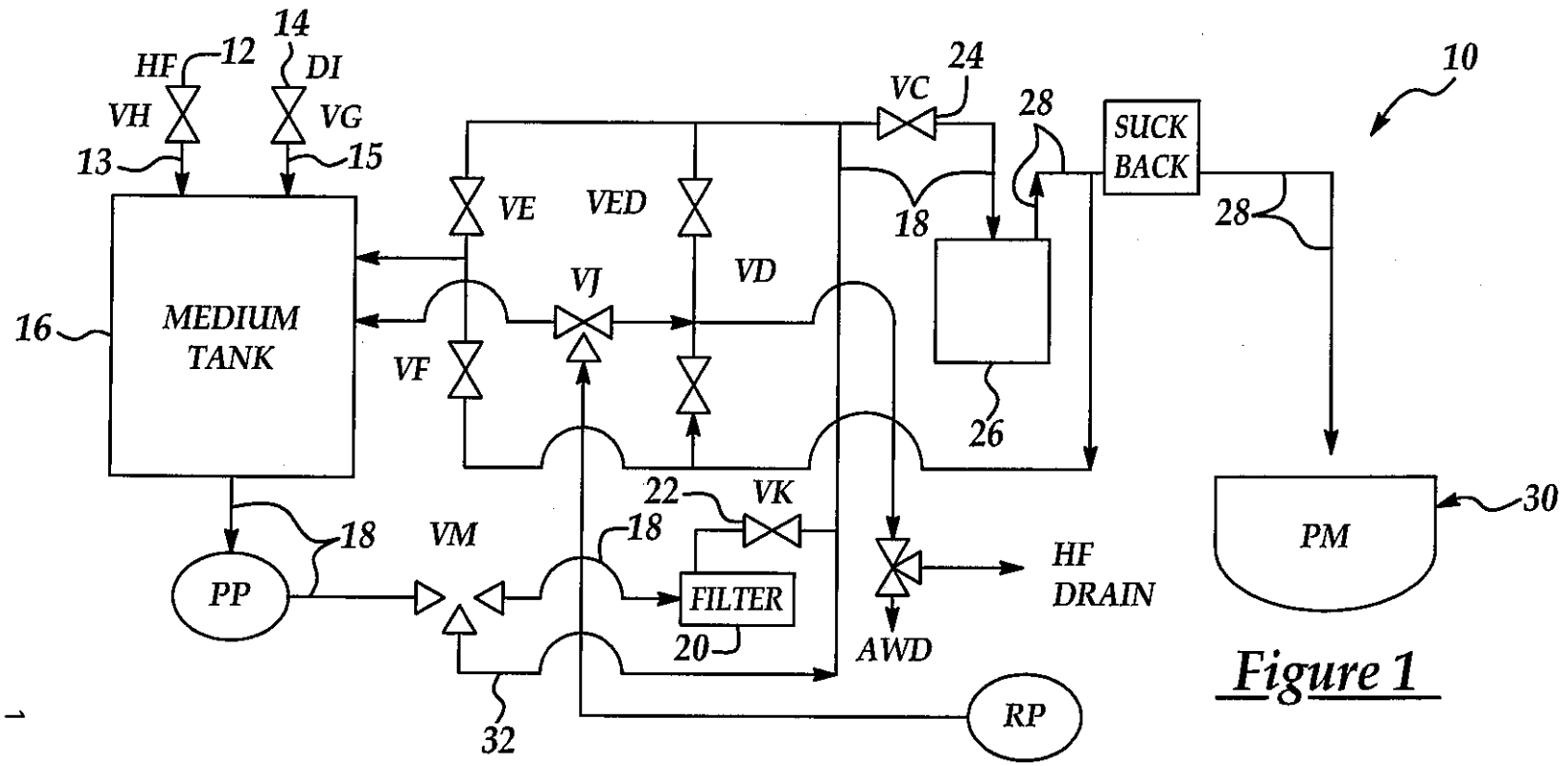

Figure 1

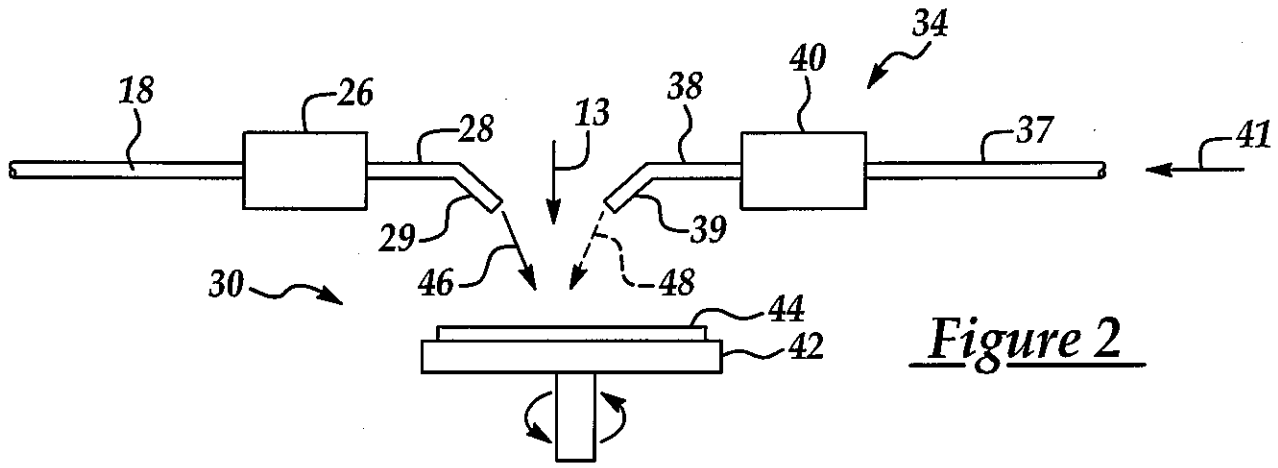

Figure 2

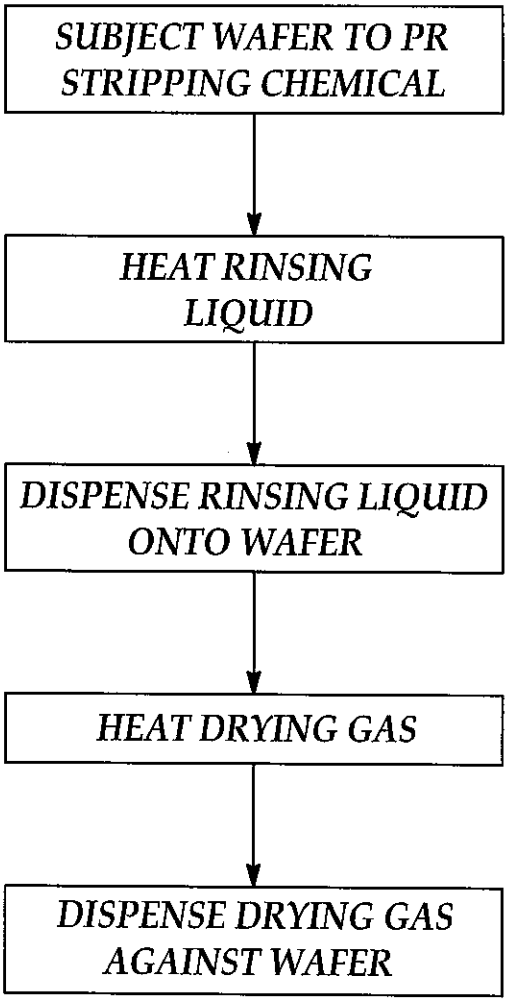
SUBJECT WAFER TO PR STRIPPING CHEMICAL
HEAT RINSING LIQUID
DISPENSE RINSING LIQUID ONTO WAFER
HEAT DRYING GAS
DISPENSE DRYING GAS AGAINST WAFER

Figure 3