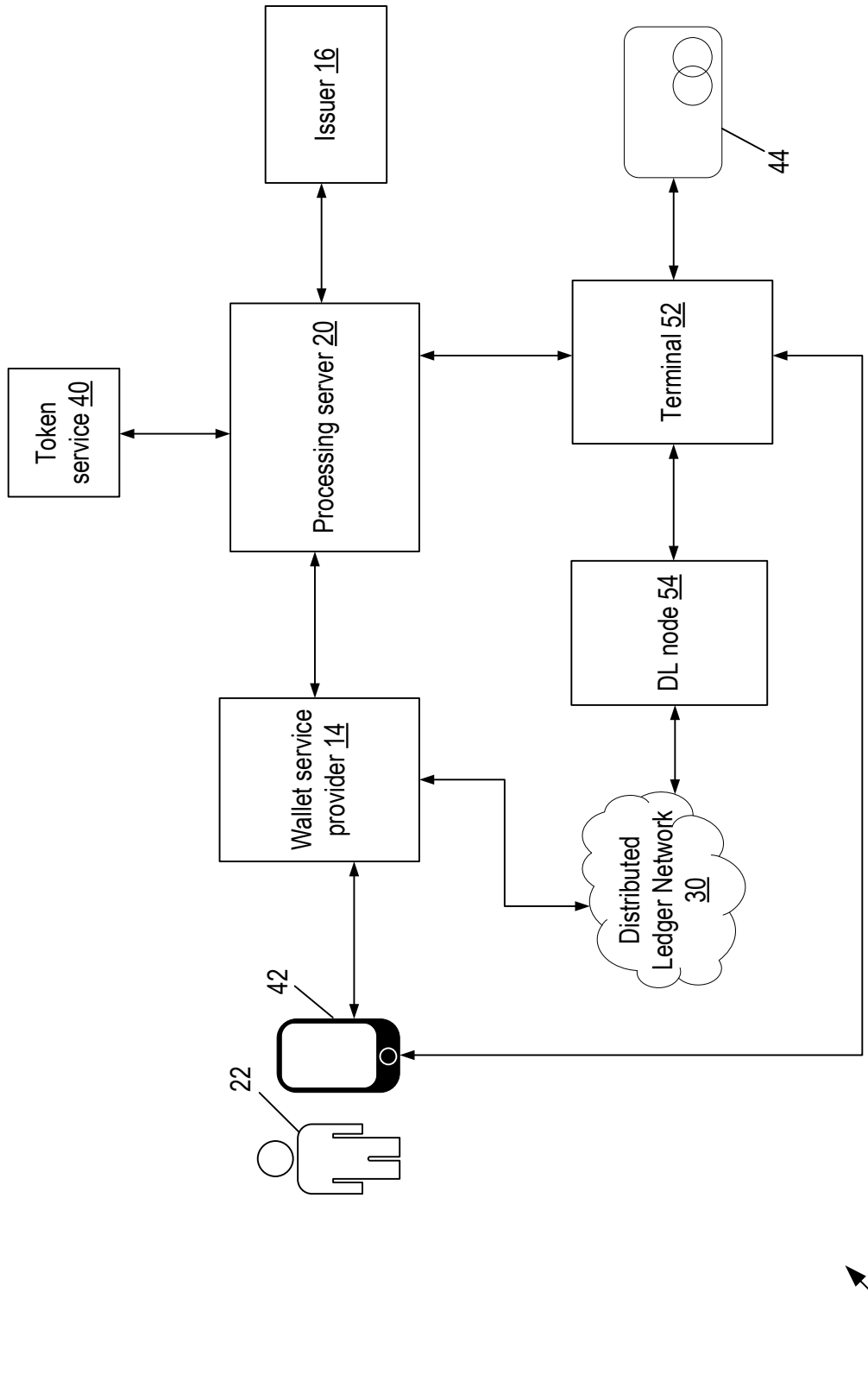
Issuer 16
44
Token service 40
Processing server 20
Terminal 52
DL node 54
Wallet service provider 14
Distributed Ledger Network 30
42
22
10

Figure 1

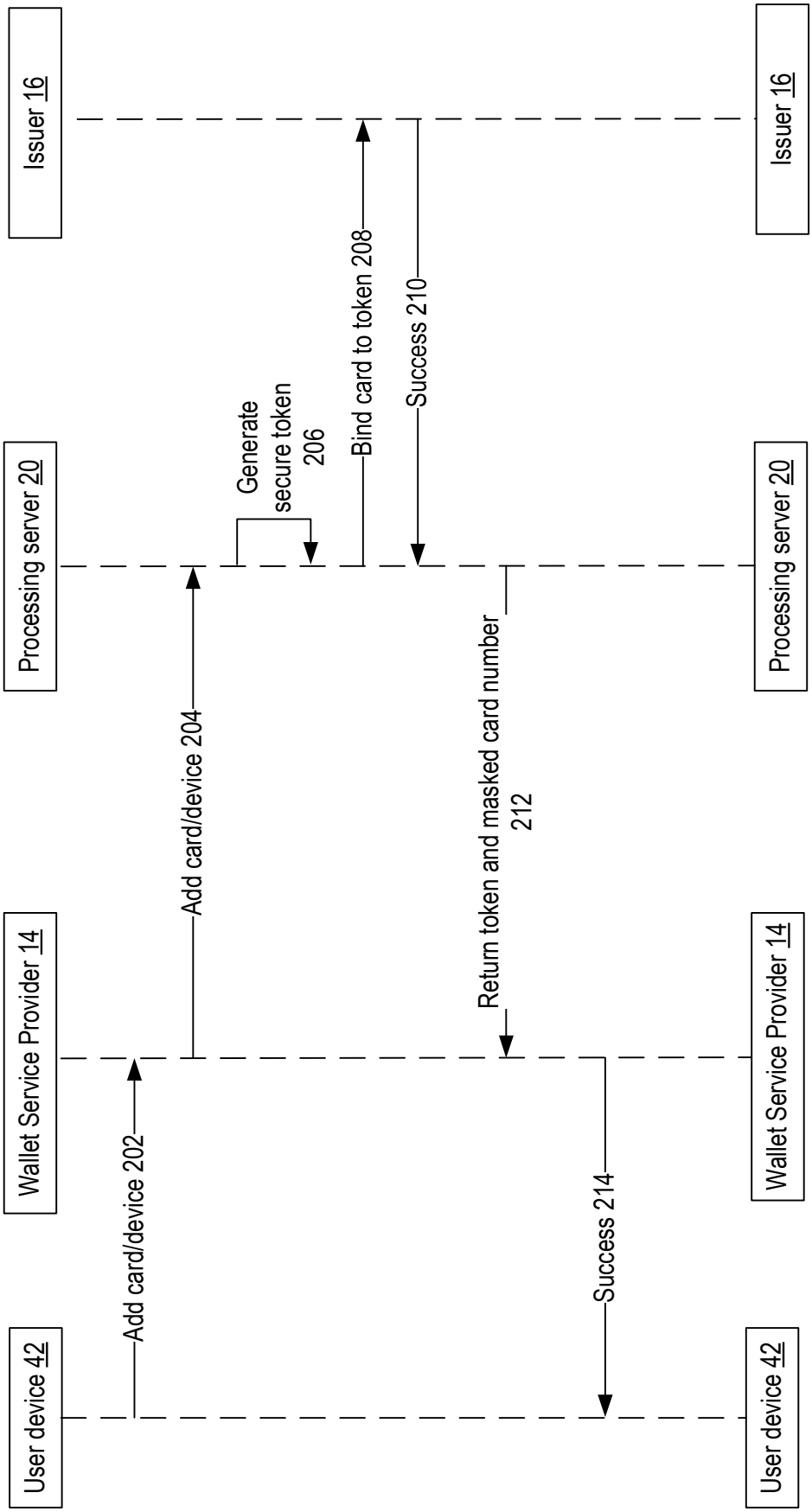
Issuer 16
Issuer 16
Processing server 20
Processing server 20
Wallet Service Provider 14
Wallet Service Provider 14
User device 42
User device 42
Add card/device 202
Add card/device 204
Generate secure token 206
Bind card to token 208
Success 210
Return token and masked card number 212
Success 214
200

Figure 2

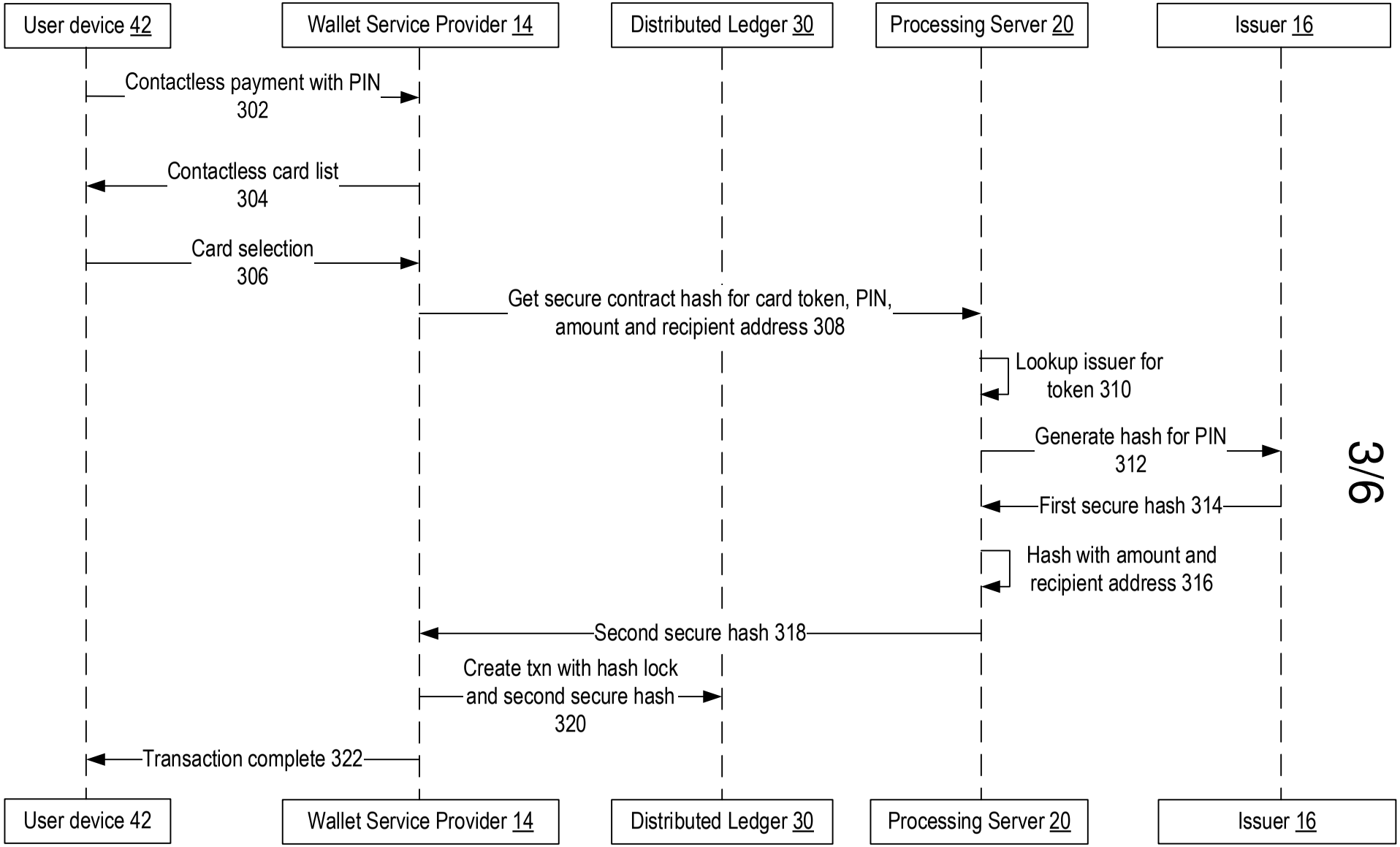
User device 42
Wallet Service Provider 14
Distributed Ledger 30
Processing Server 20
Issuer 16
Contactless payment with PIN 302
Contactless card list 304
Card selection 306
Get secure contract hash for card token, PIN, amount and recipient address 308
Lookup issuer for token 310
Generate hash for PIN 312
First secure hash 314
Hash with amount and recipient address 316
Second secure hash 318
Create txn with hash lock and second secure hash 320
Transaction complete 322
User device 42
Wallet Service Provider 14
Distributed Ledger 30
Processing Server 20
Issuer 16
300

Figure 3

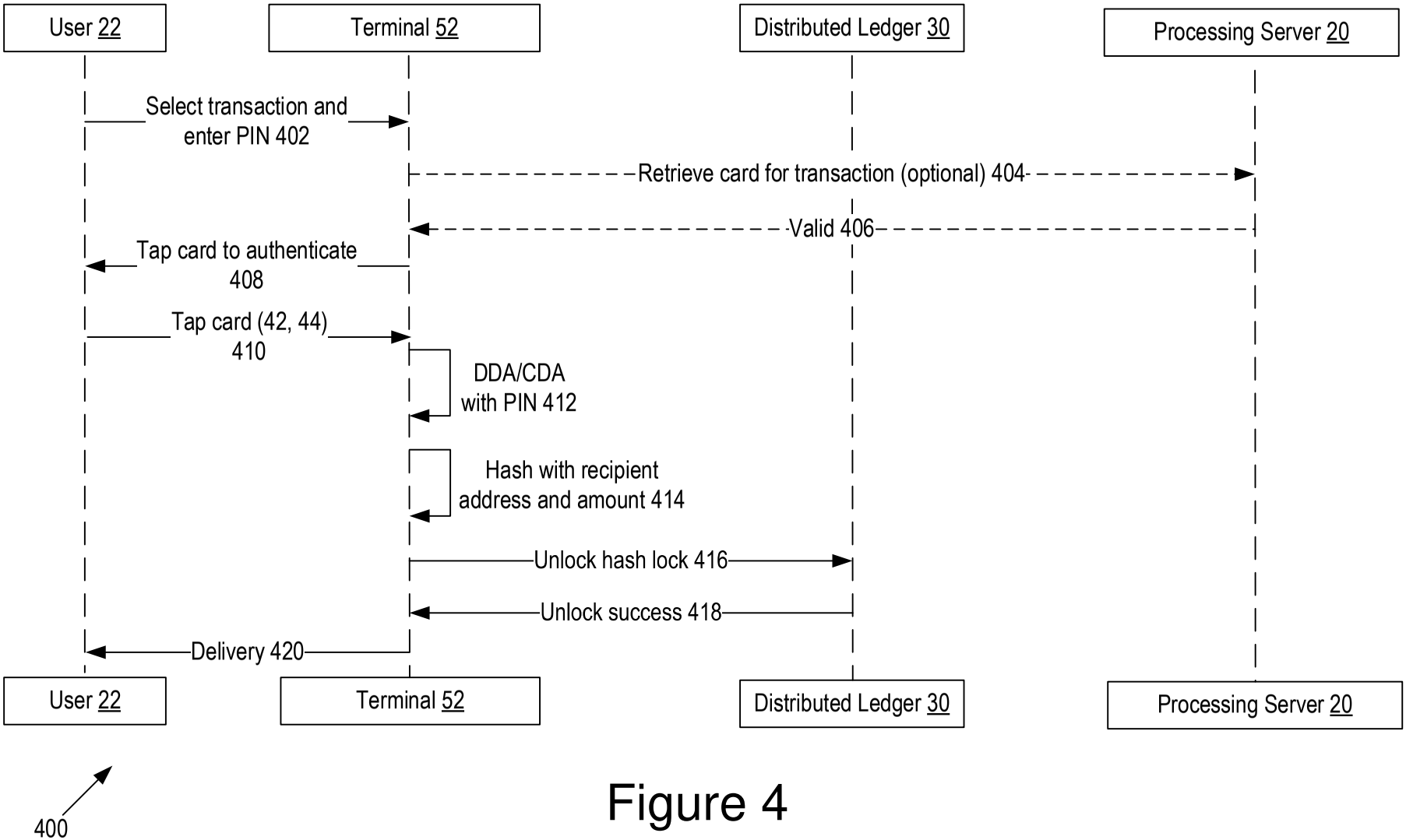
User 22
Terminal 52
Distributed Ledger 30
Processing Server 20
Select transaction and enter PIN 402
Retrieve card for transaction (optional) 404
Valid 406
Tap card to authenticate 408
Tap card (42, 44) 410
DDA/CDA with PIN 412
Hash with recipient address and amount 414
Unlock hash lock 416
Unlock success 418
Delivery 420
User 22
Terminal 52
Distributed Ledger 30
Processing Server 20
400

Figure 4

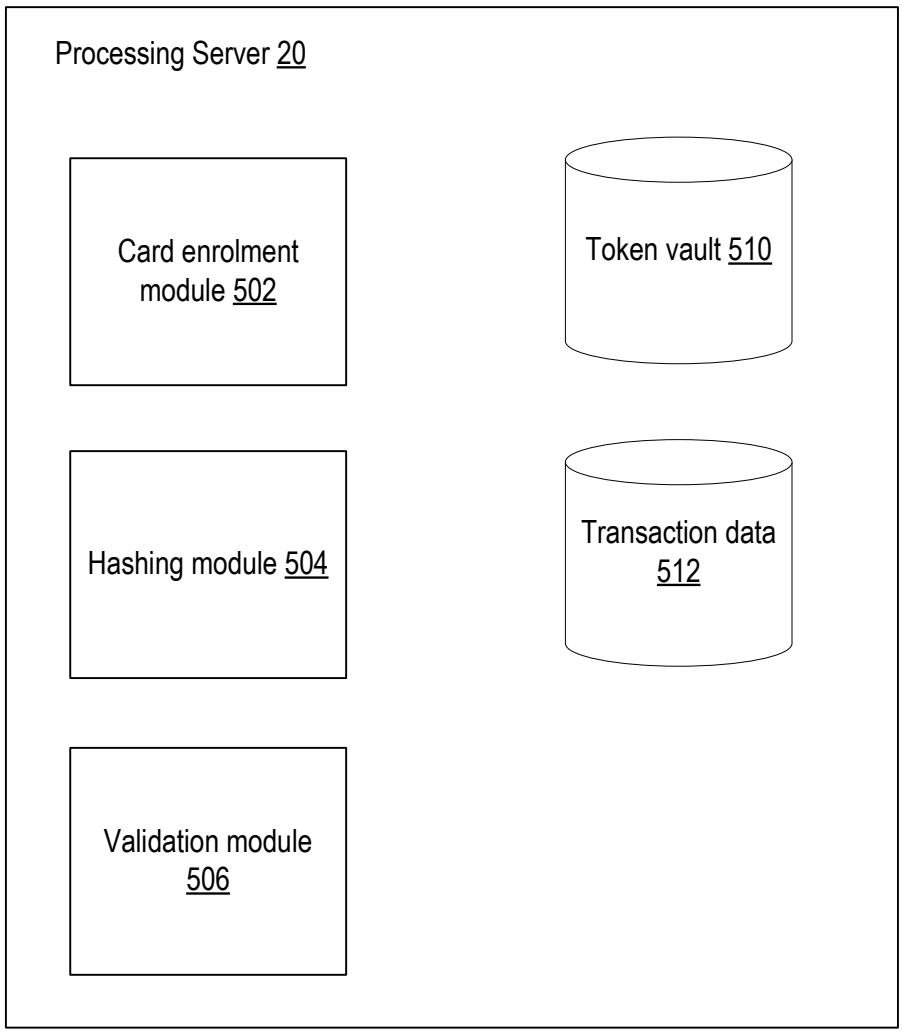
Processing Server 20
Card enrolment module 502
Token vault 510
Hashing module 504
Transaction data 512
Validation module 506

Figure 5

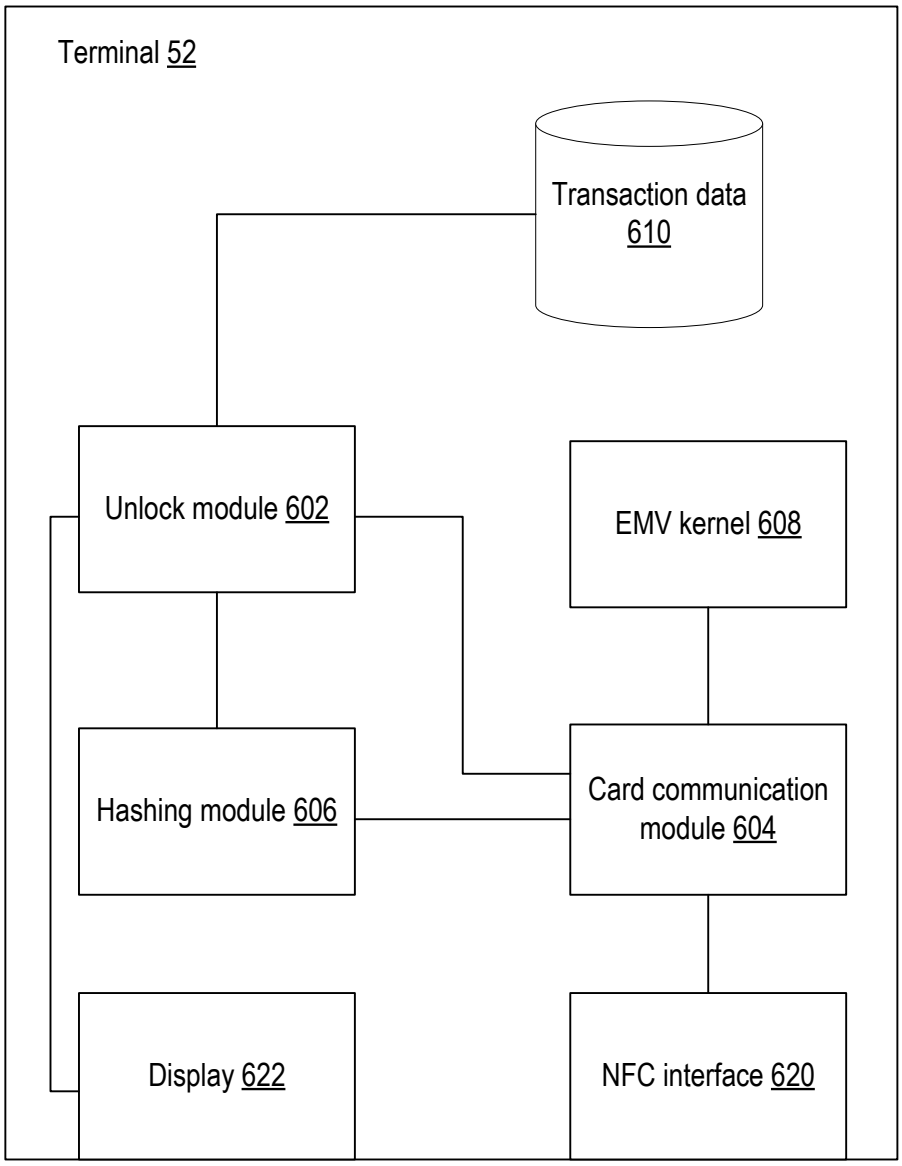
Terminal 52
Transaction data 610
Unlock module 602
EMV kernel 608
Hashing module 606
Card communication module 604
Display 622
NFC interface 620

Figure 6