FIG.1

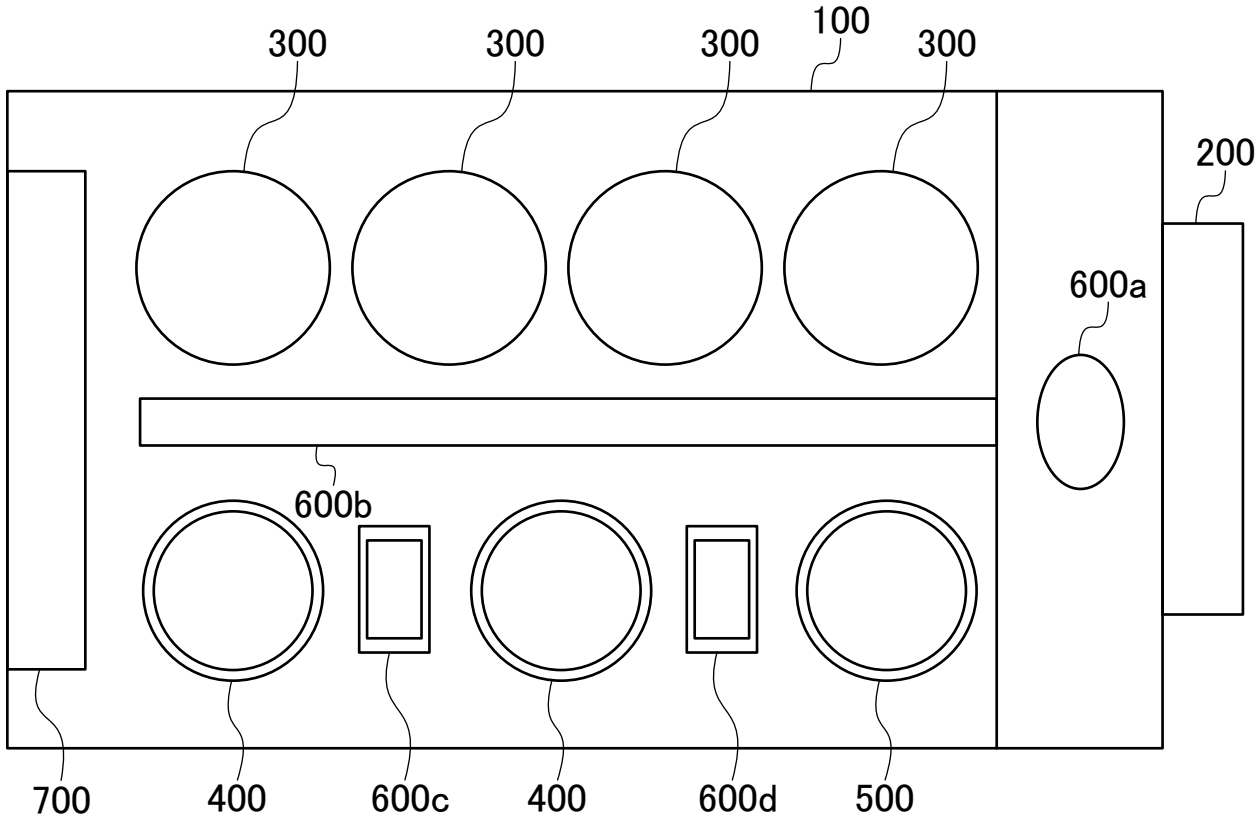

FIG.2

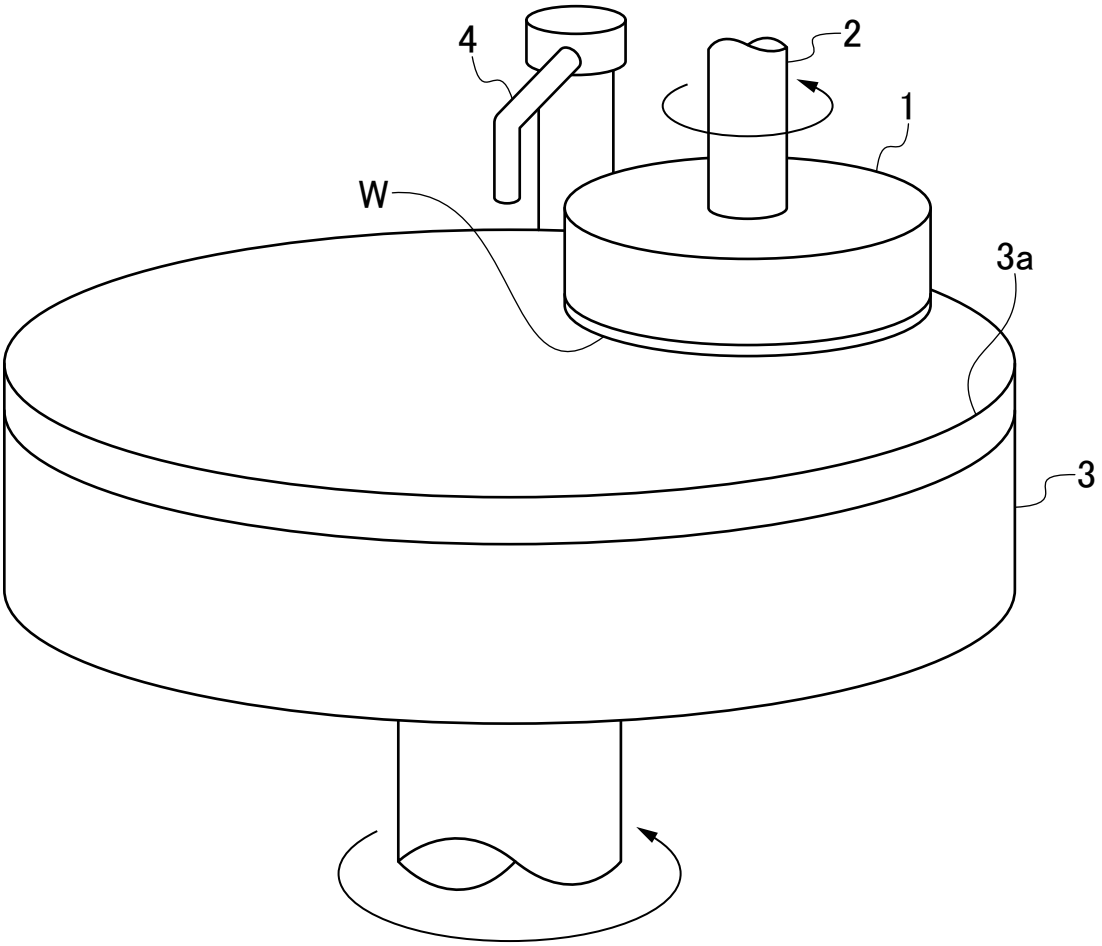

300

FIG.3

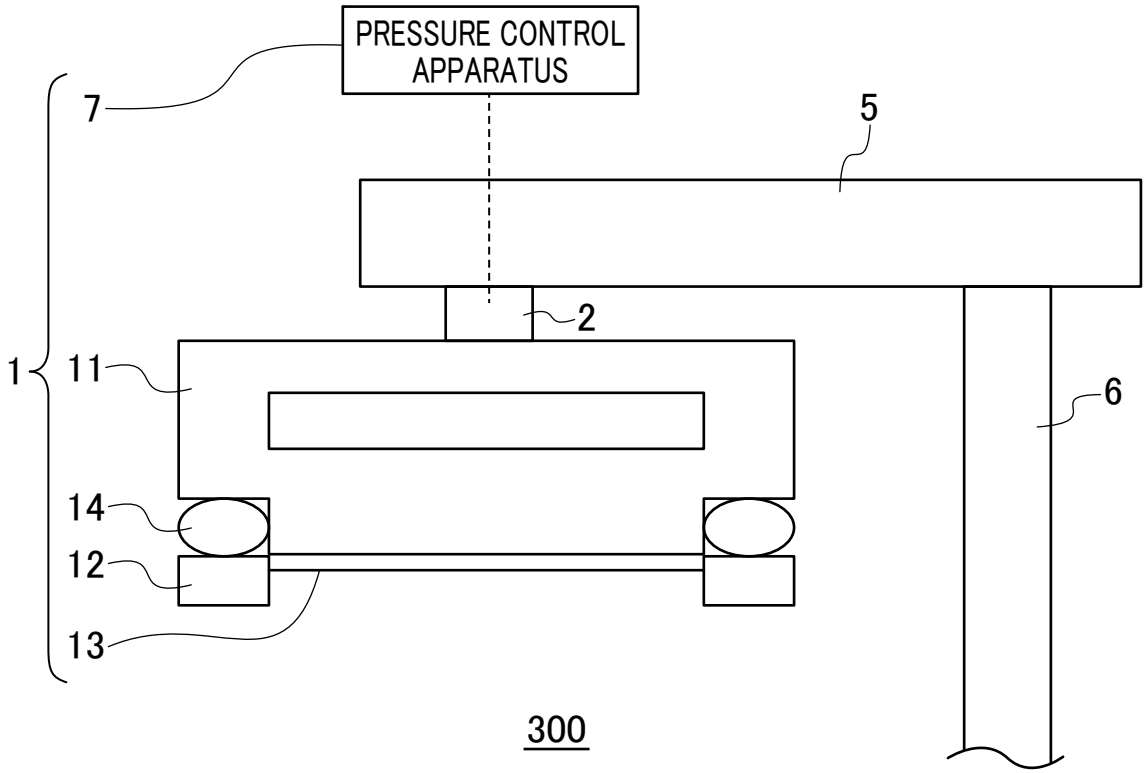

FIG.4A

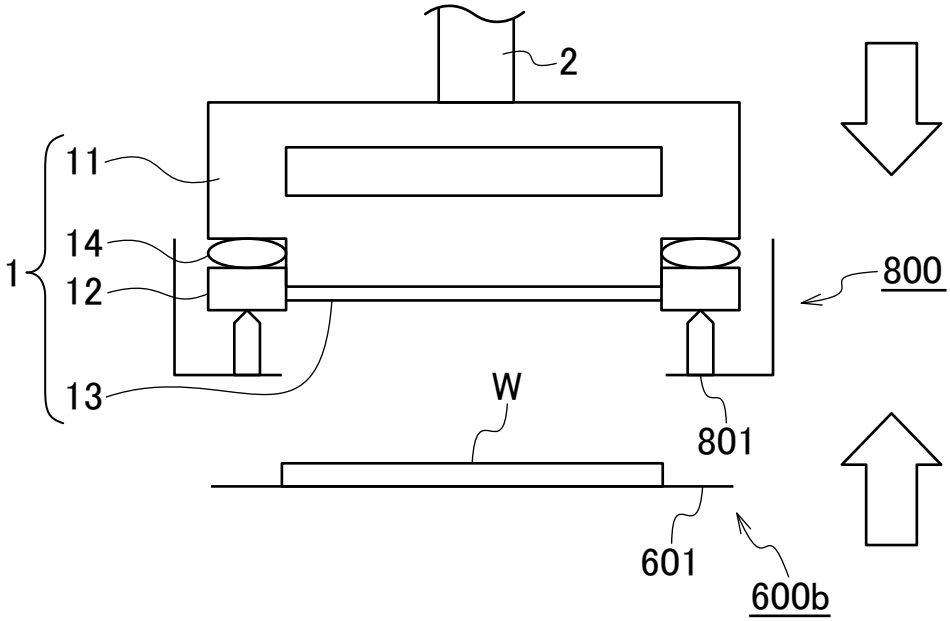

FIG.4B

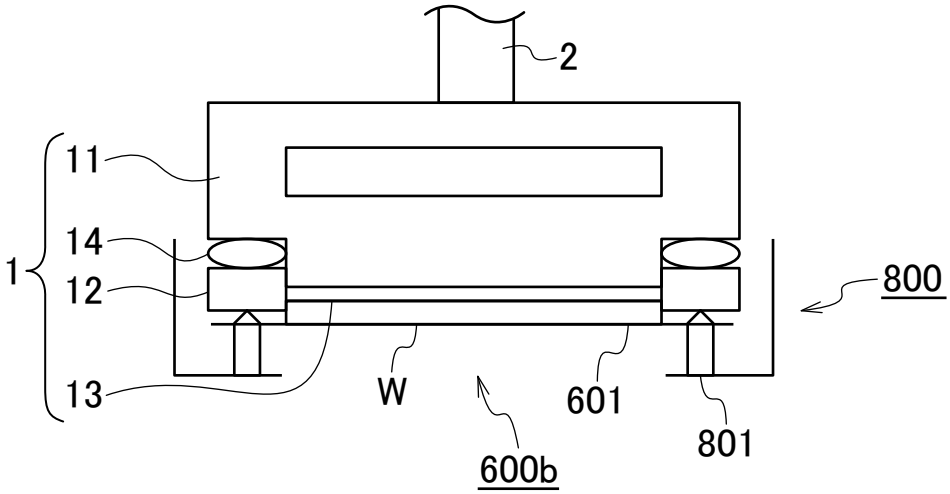

FIG.4C

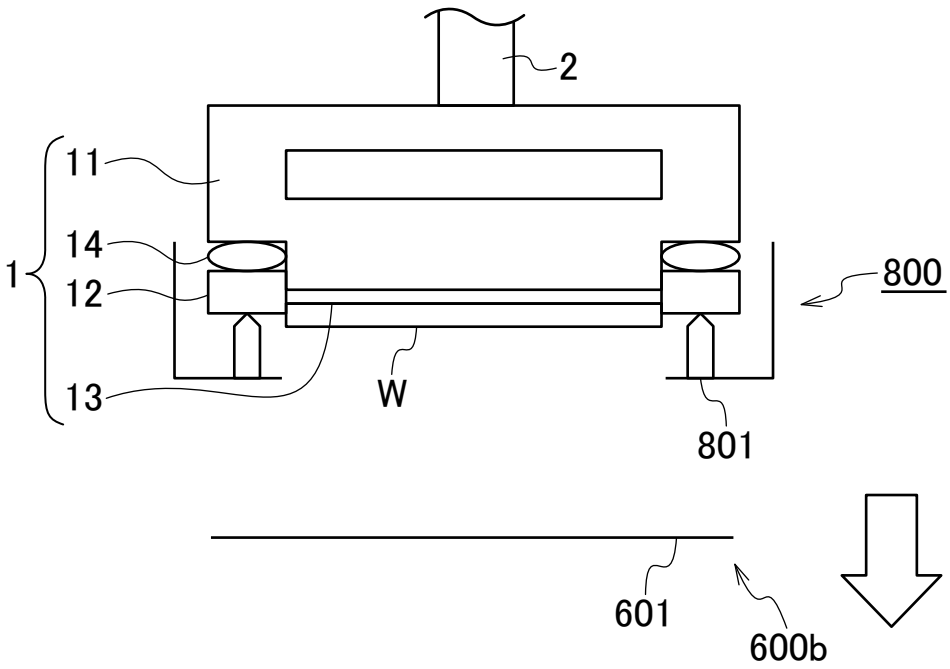

FIG.5

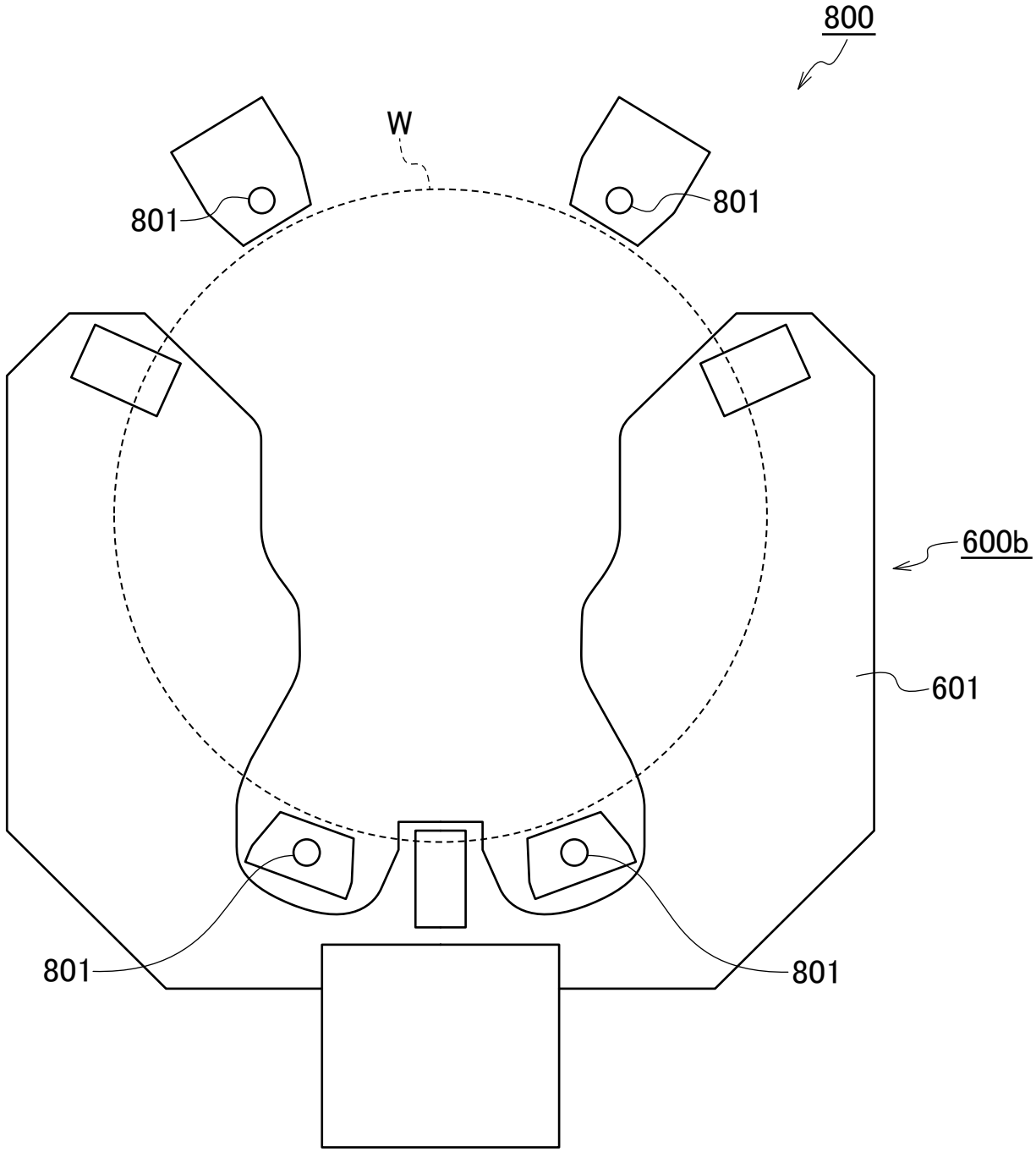

FIG.6

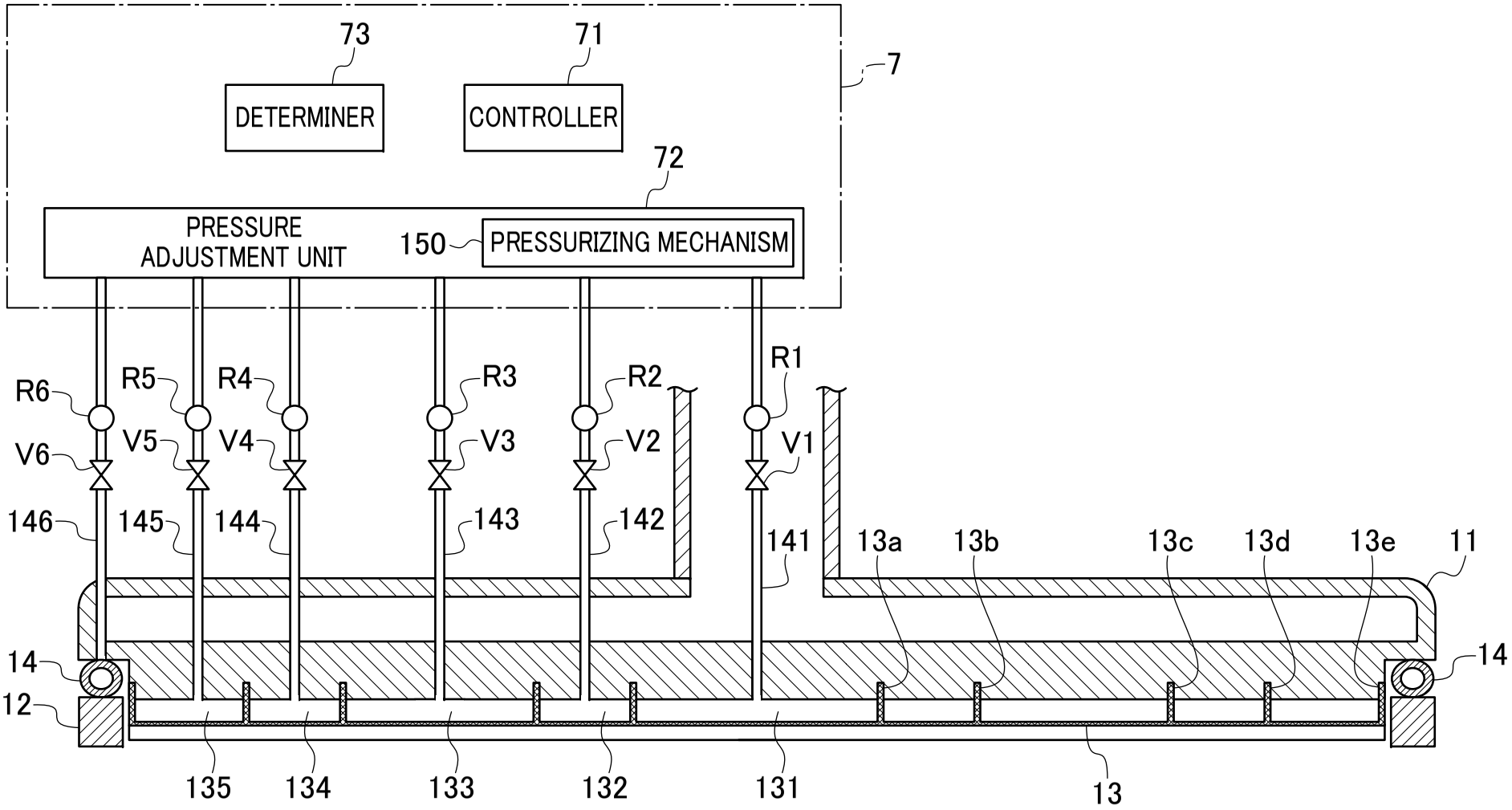
73
71
7
DETERMINER
CONTROLLER
72
PRESSURE
ADJUSTMENT UNIT
150
PRESSURIZING MECHANISM
R6
R5
R4
R3
R2
R1
V6
V5
V4
V3
V2
V1
146
145
144
143
142
141
13a
13b
13c
13d
13e
11
14
14
12
135
134
133
132
131
13

FIG.7

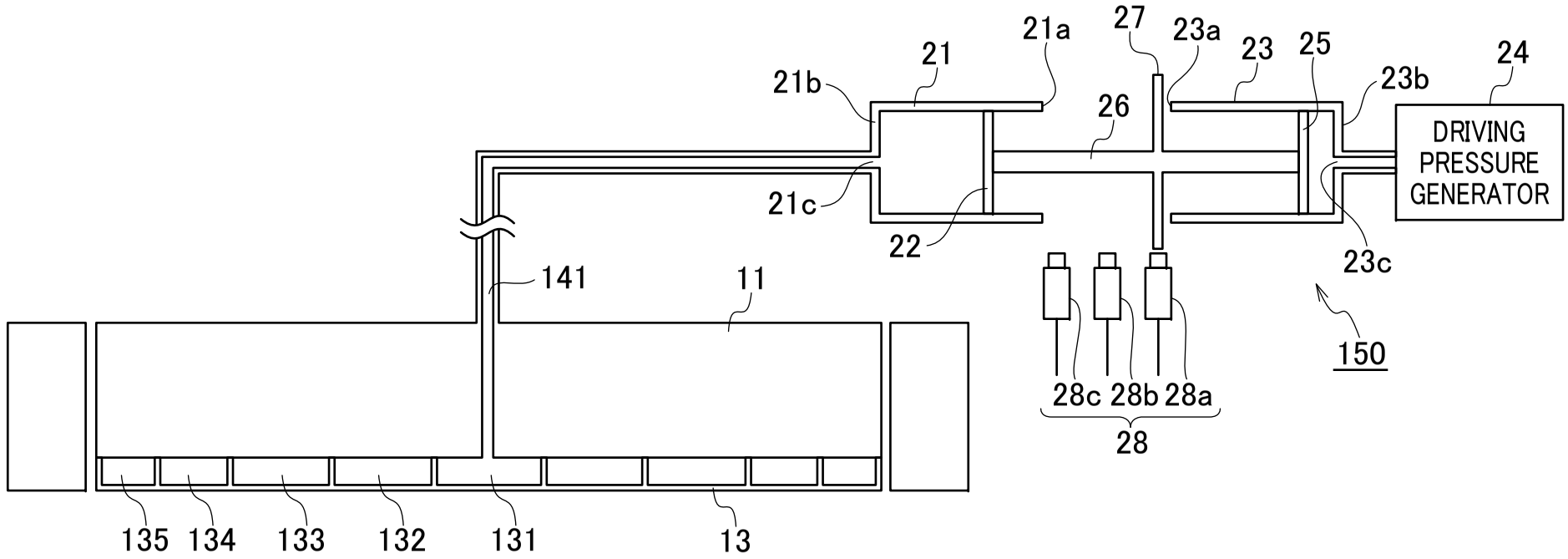
21
21a
21b
21c
22
23
23a
23b
23c
24
25
26
27
28
28a
28b
28c
DRIVING PRESSURE GENERATOR
150
11
13
131
132
133
134
135
141

FIG.8A

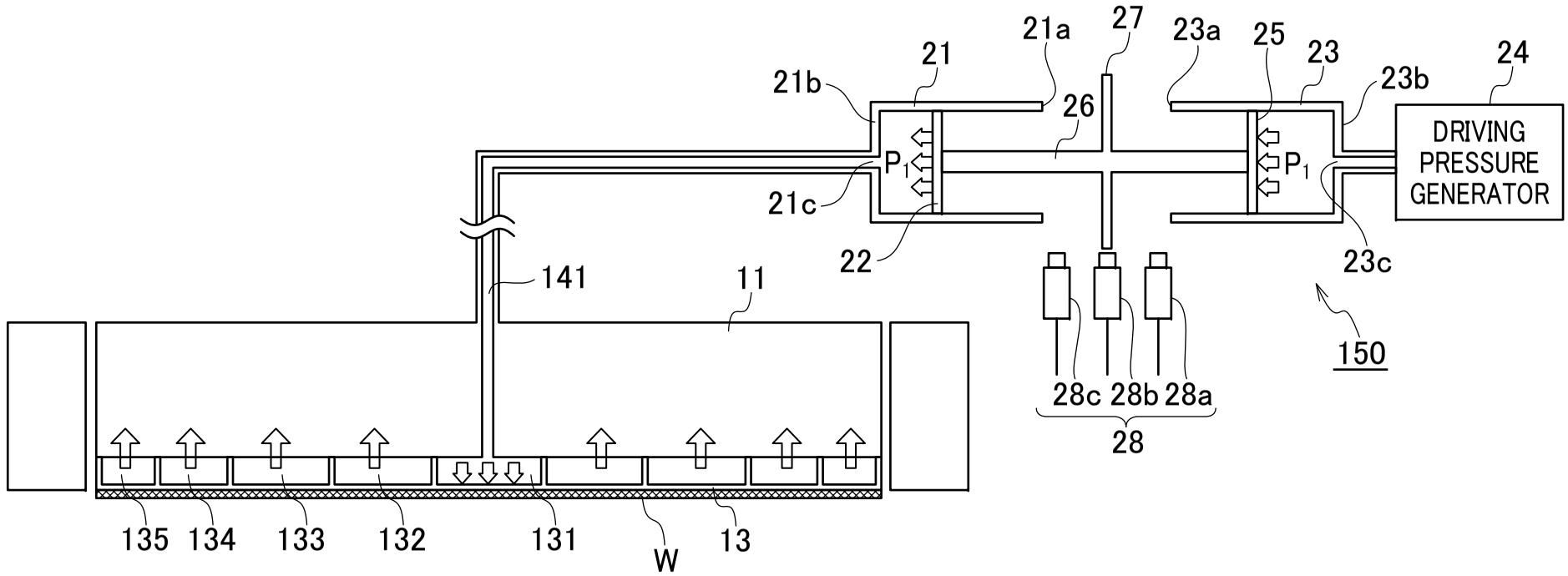
21
21a
27
23a
25
23
24
21b
26
23b
DRIVING
PRESSURE
GENERATOR
P1
P1
21c
22
23c
141
11
150
28c
28b
28a
28
135
134
133
132
131
W
13

FIG.8B

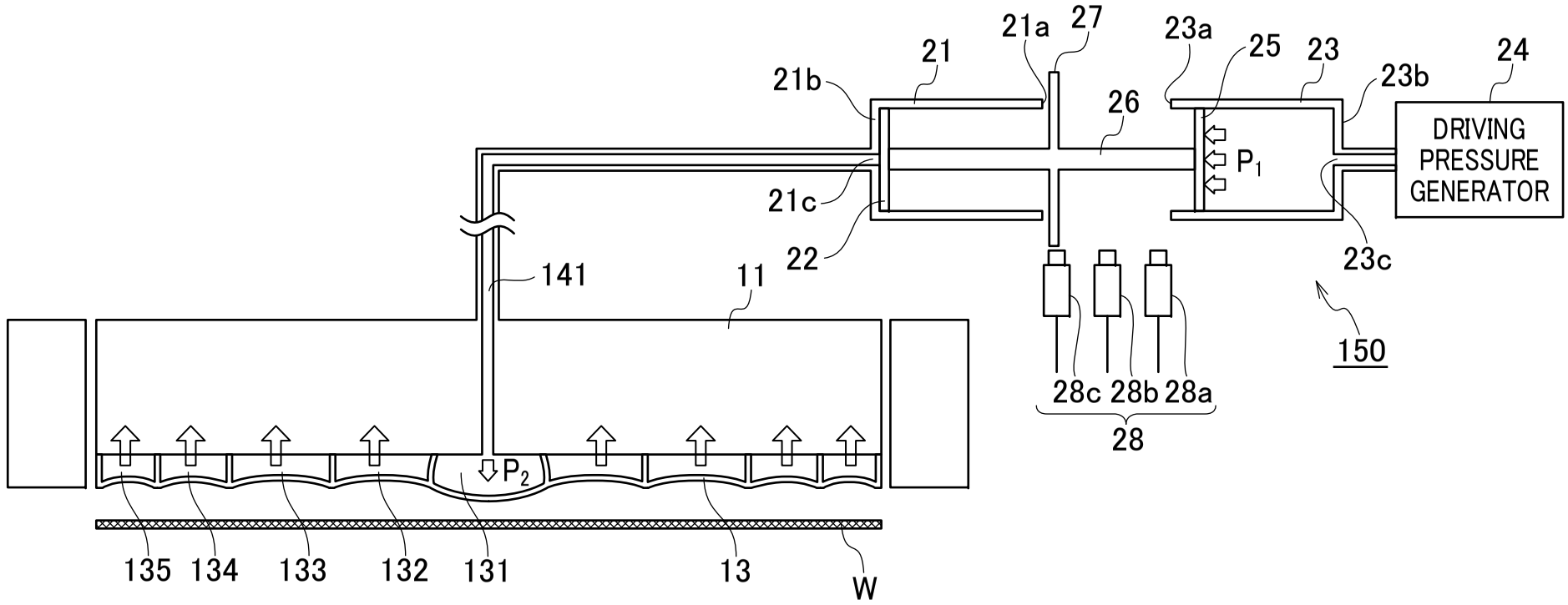
21
21a
27
23a
25
23
23b
24
21b
26
DRIVING
PRESSURE
GENERATOR
P1
21c
22
23c
141
11
150
28c
28b
28a
28
P2
135
134
133
132
131
13
W

FIG.9

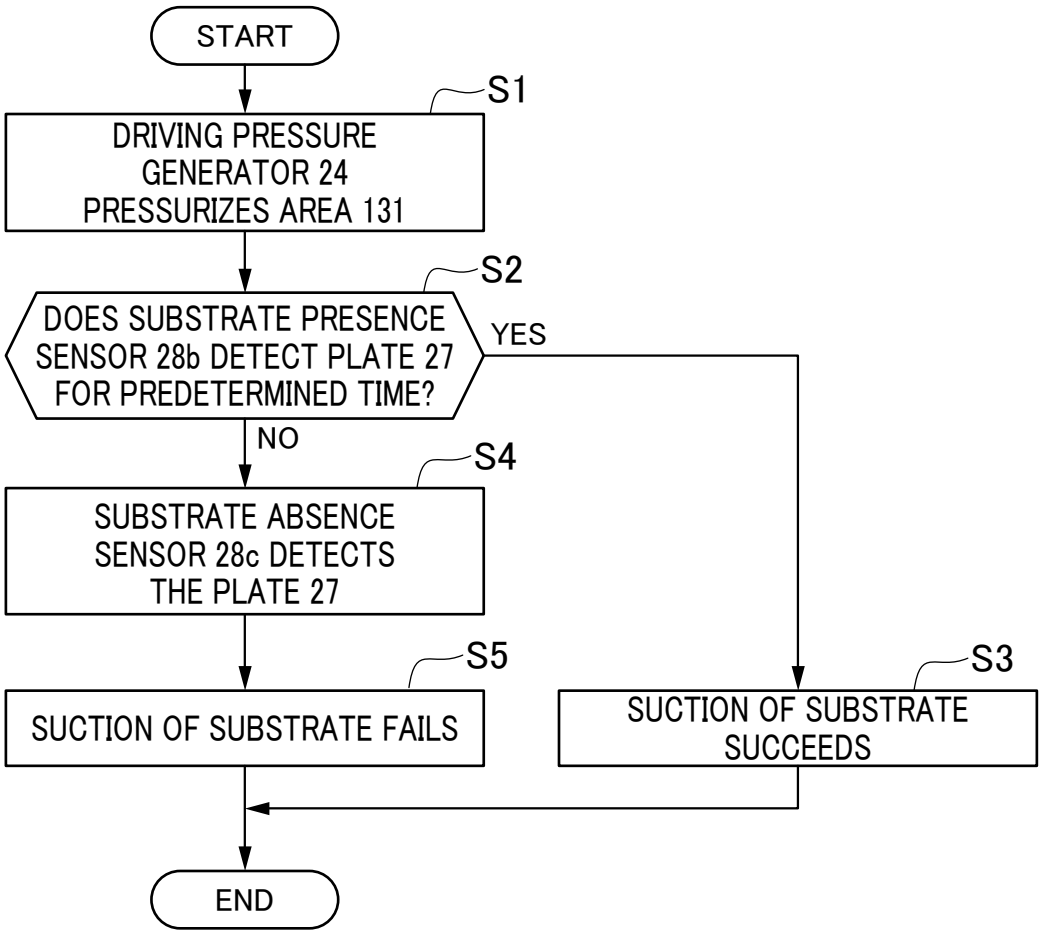
START
S1
DRIVING PRESSURE GENERATOR 24 PRESSURIZES AREA 131
S2
DOES SUBSTRATE PRESENCE SENSOR 28b DETECT PLATE 27 FOR PREDETERMINED TIME?
YES
NO
S4
SUBSTRATE ABSENCE SENSOR 28c DETECTS THE PLATE 27
S5
SUCTION OF SUBSTRATE FAILS
S3
SUCTION OF SUBSTRATE SUCCEEDS
END

FIG.10

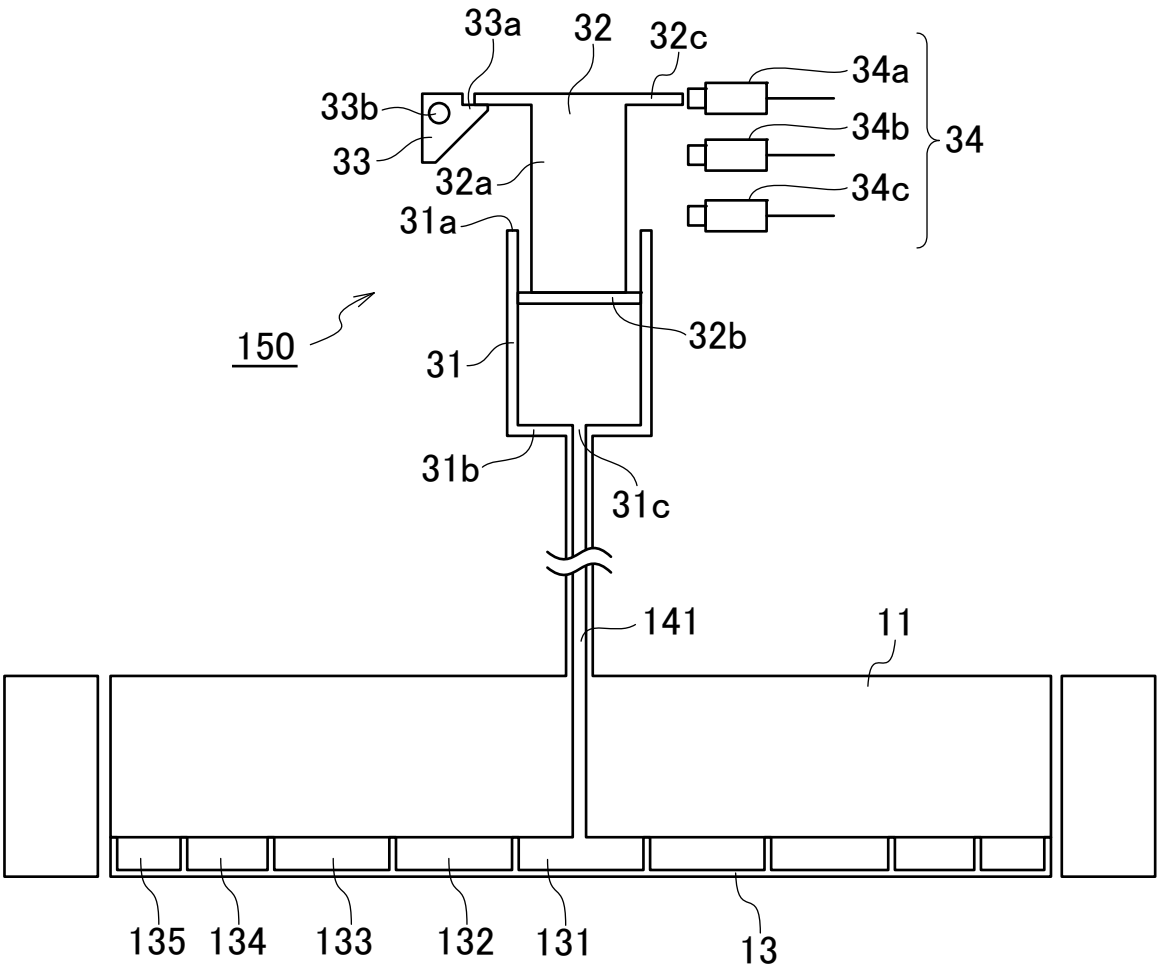
33a
32
32c
34a
33b
34b
34
33
32a
34c
31a
150
32b
31
31b
31c
141
11
135
134
133
132
131
13

FIG.11A

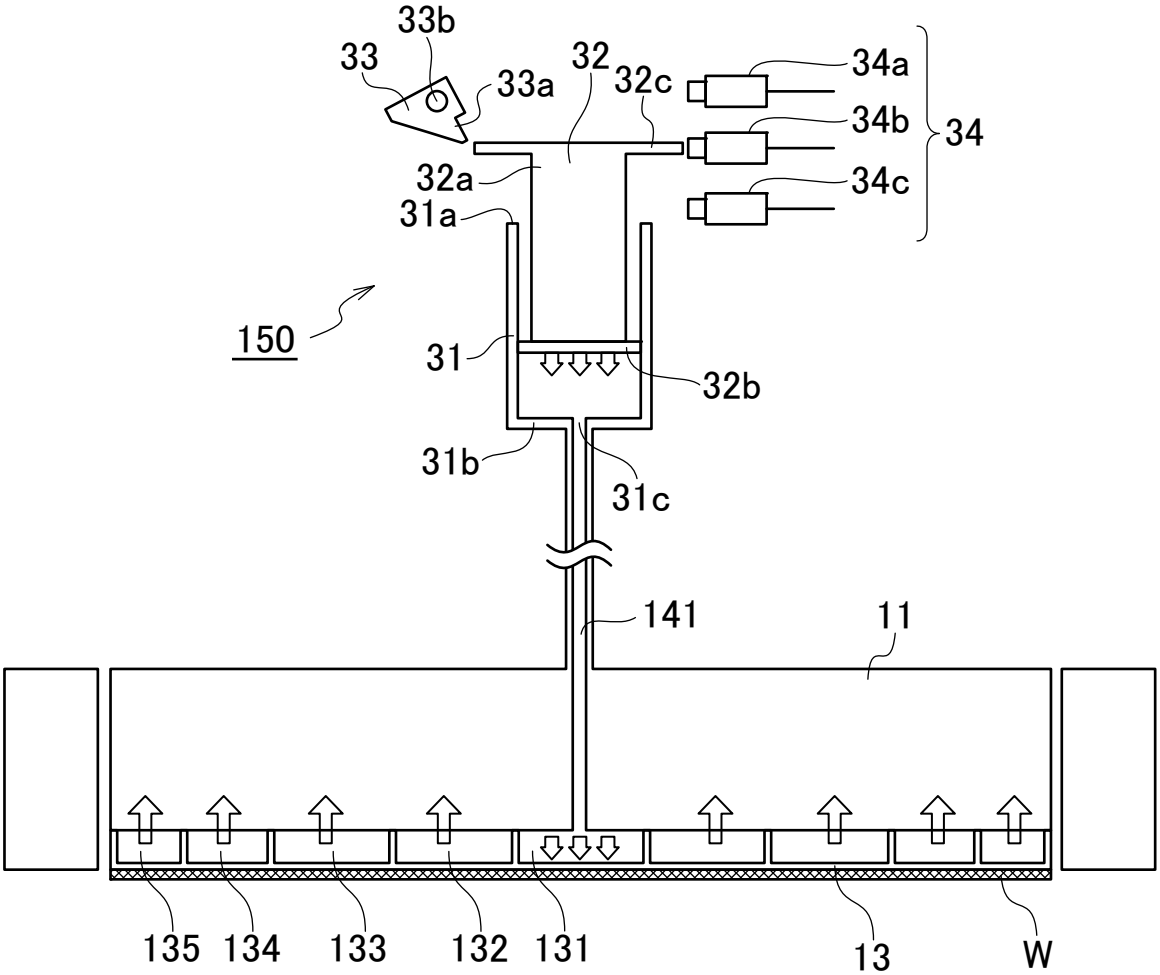
33b
33
33a
32
32c
34a
34b
34
34c
32a
31a
150
31
32b
31b
31c
141
11
135
134
133
132
131
13
W

FIG.11B

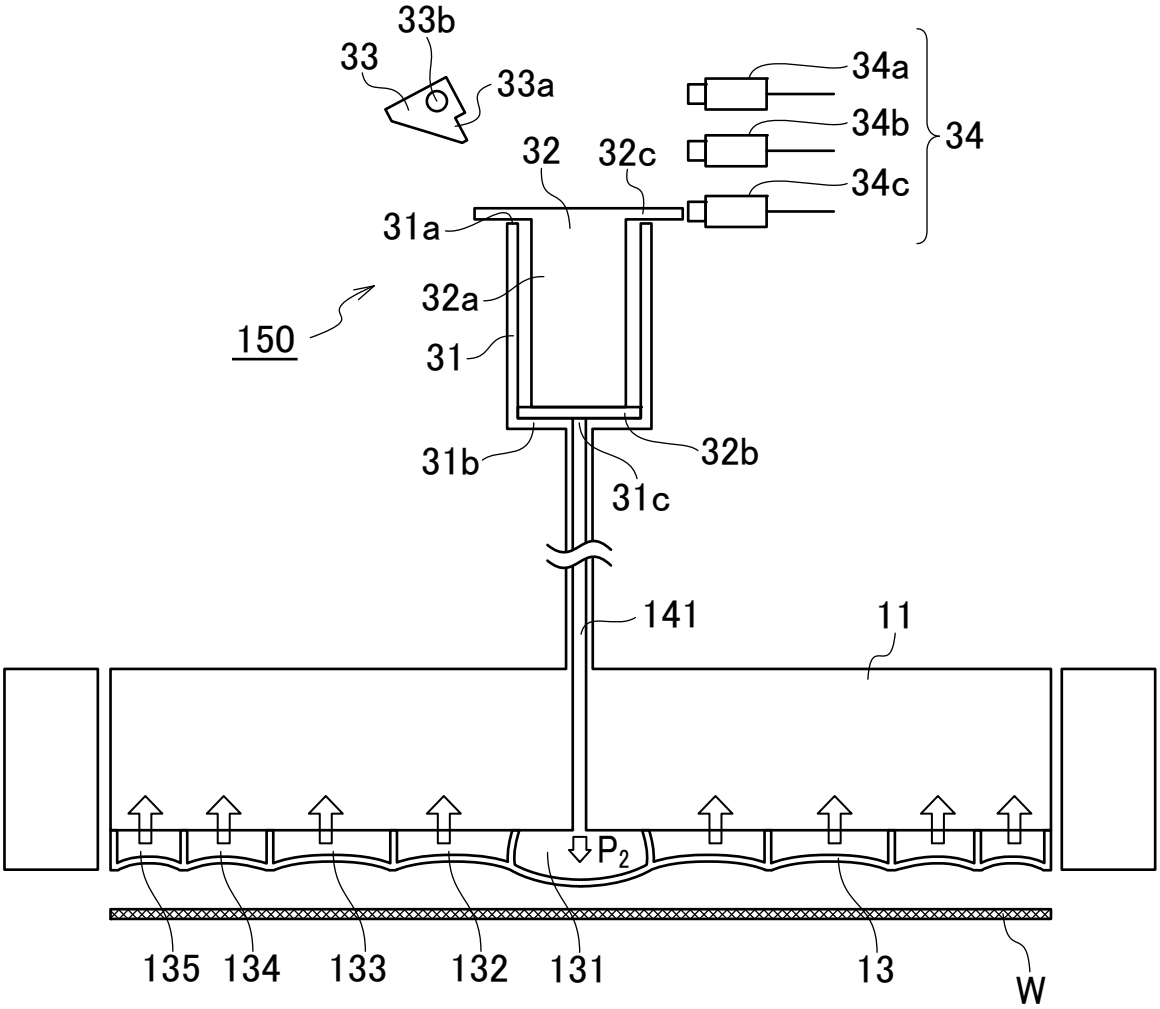
33b
33
33a
34a
34b
34
34c
32
32c
31a
32a
150
31
31b
32b
31c
141
11
P2
135
134
133
132
131
13
W

FIG.12

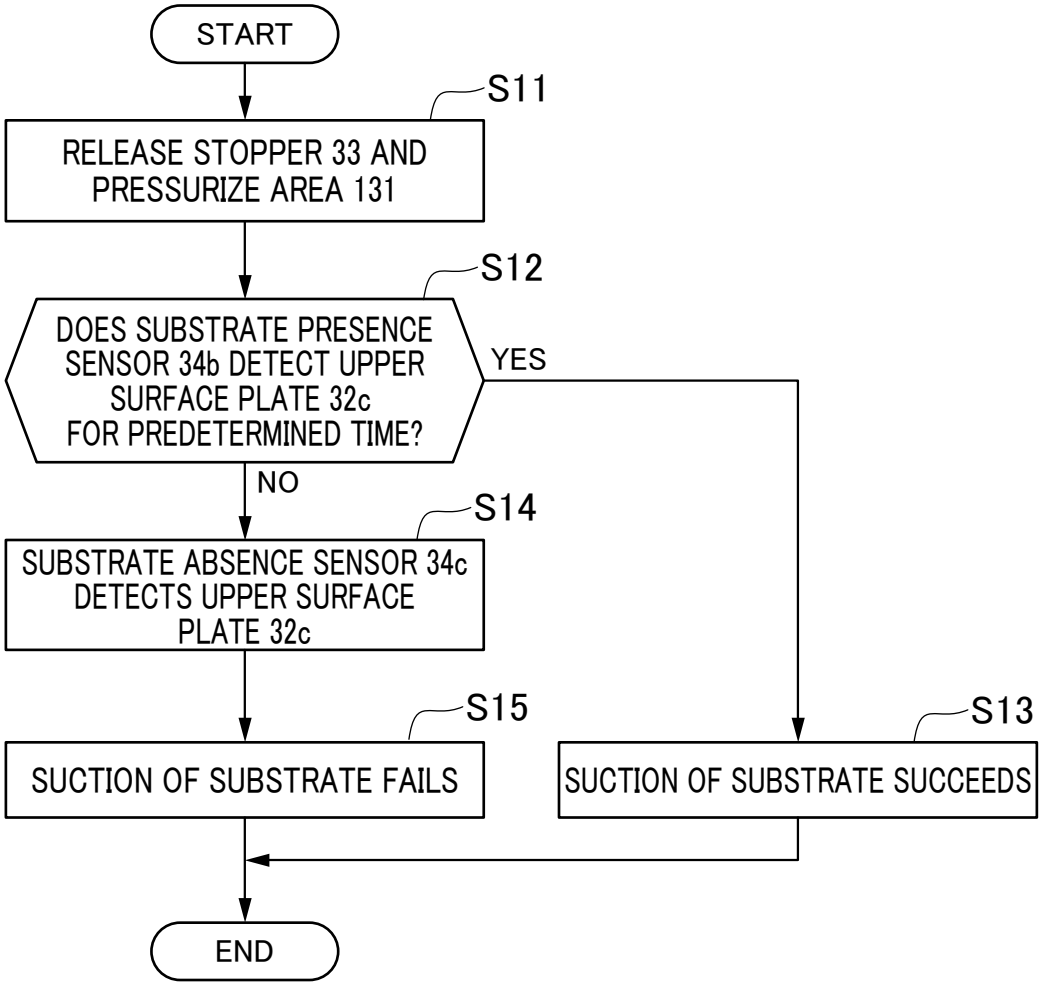
START
S11
RELEASE STOPPER 33 AND PRESSURIZE AREA 131
S12
DOES SUBSTRATE PRESENCE SENSOR 34b DETECT UPPER SURFACE PLATE 32c FOR PREDETERMINED TIME?
YES
NO
S14
SUBSTRATE ABSENCE SENSOR 34c DETECTS UPPER SURFACE PLATE 32c
S15
SUCTION OF SUBSTRATE FAILS
S13
SUCTION OF SUBSTRATE SUCCEEDS
END

FIG.13

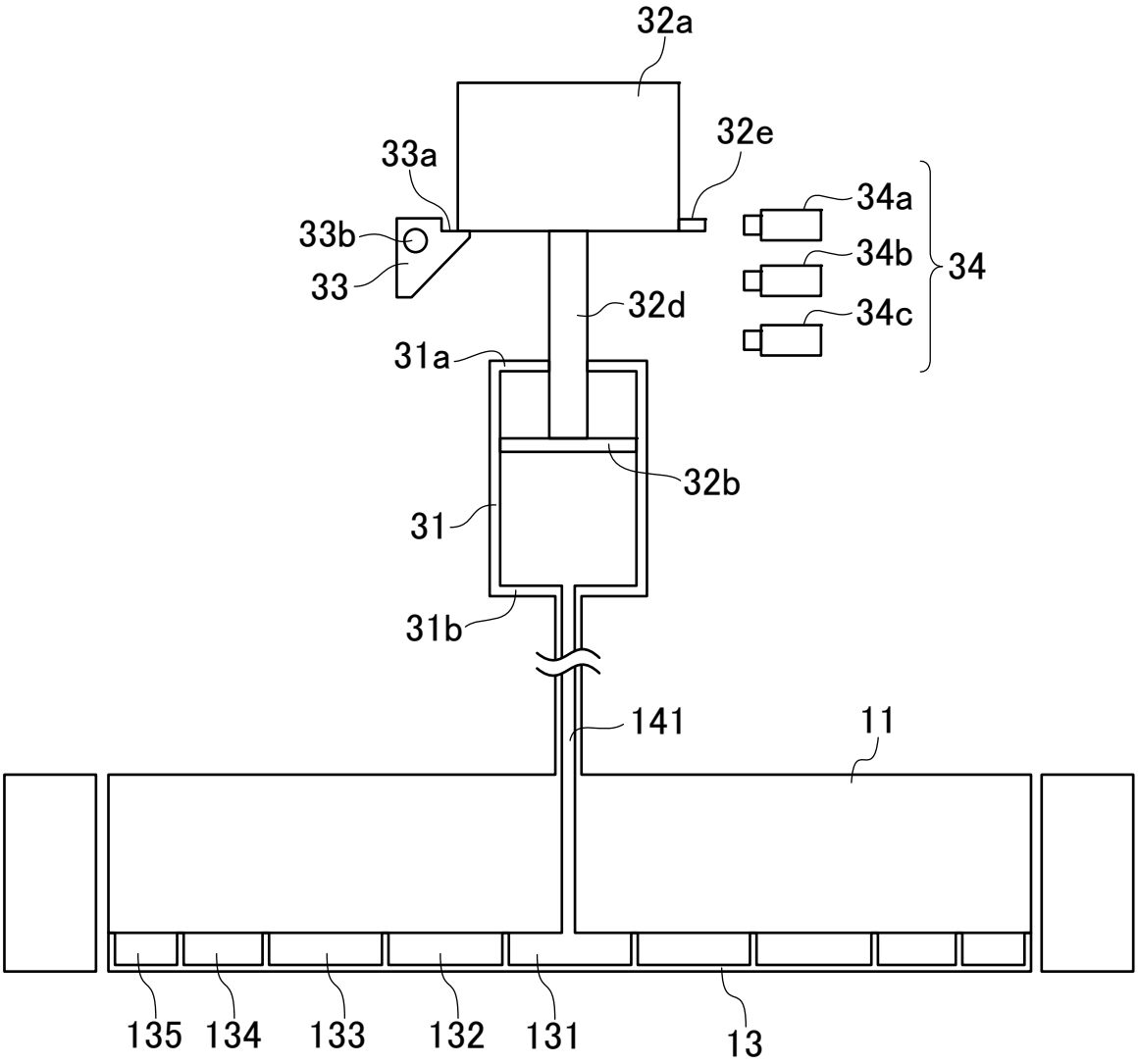
32a
32e
33a
33b
33
34a
34b
34c
34
32d
31a
32b
31
31b
141
11
135
134
133
132
131
13

FIG.14

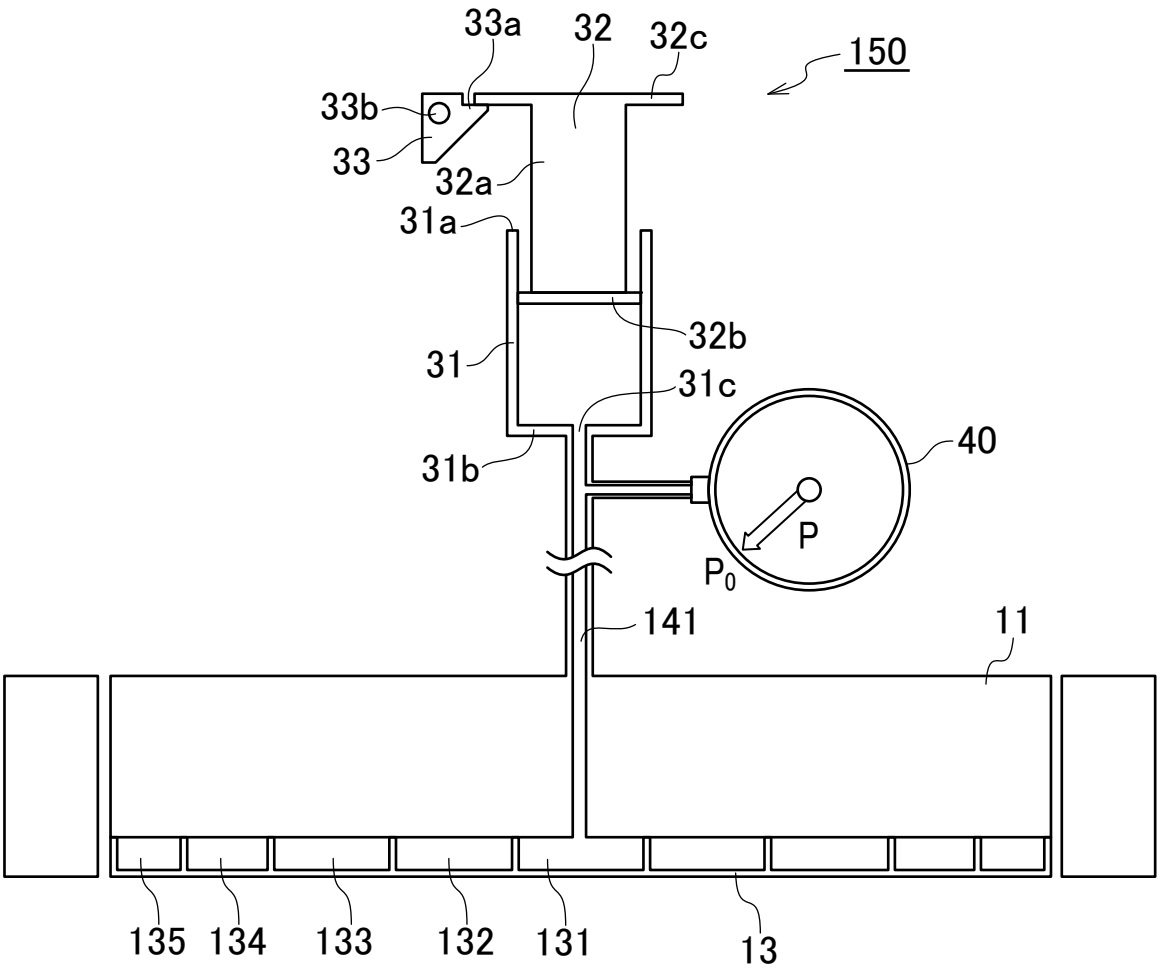
33a
32
32c
150
33b
33
32a
31a
32b
31
31c
40
31b
P
P_0
141
11
135
134
133
132
131
13

FIG.15A

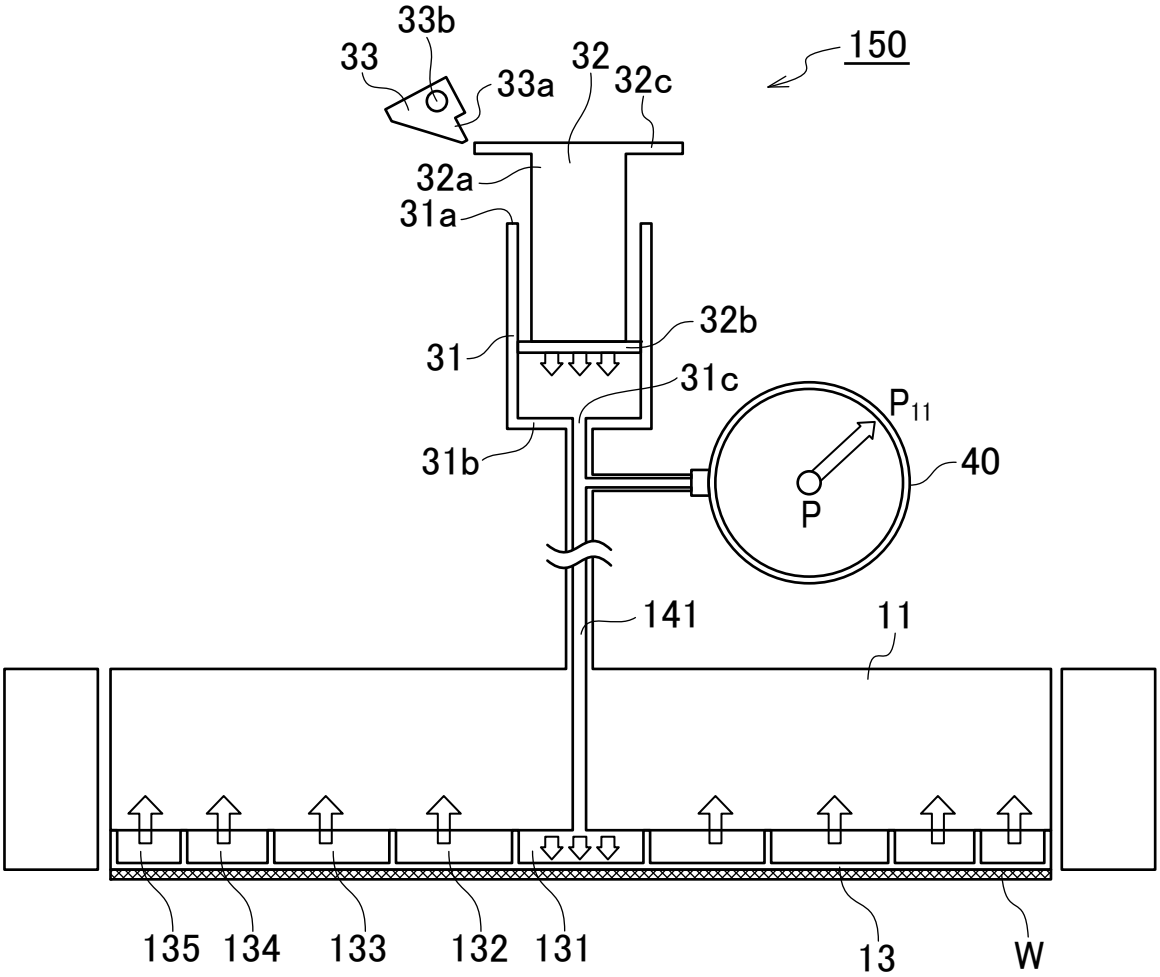
33b
33
33a
32
32c
150
32a
31a
32b
31
31c
P_{11}
31b
40
P
141
11
135
134
133
132
131
13
W

FIG.15B

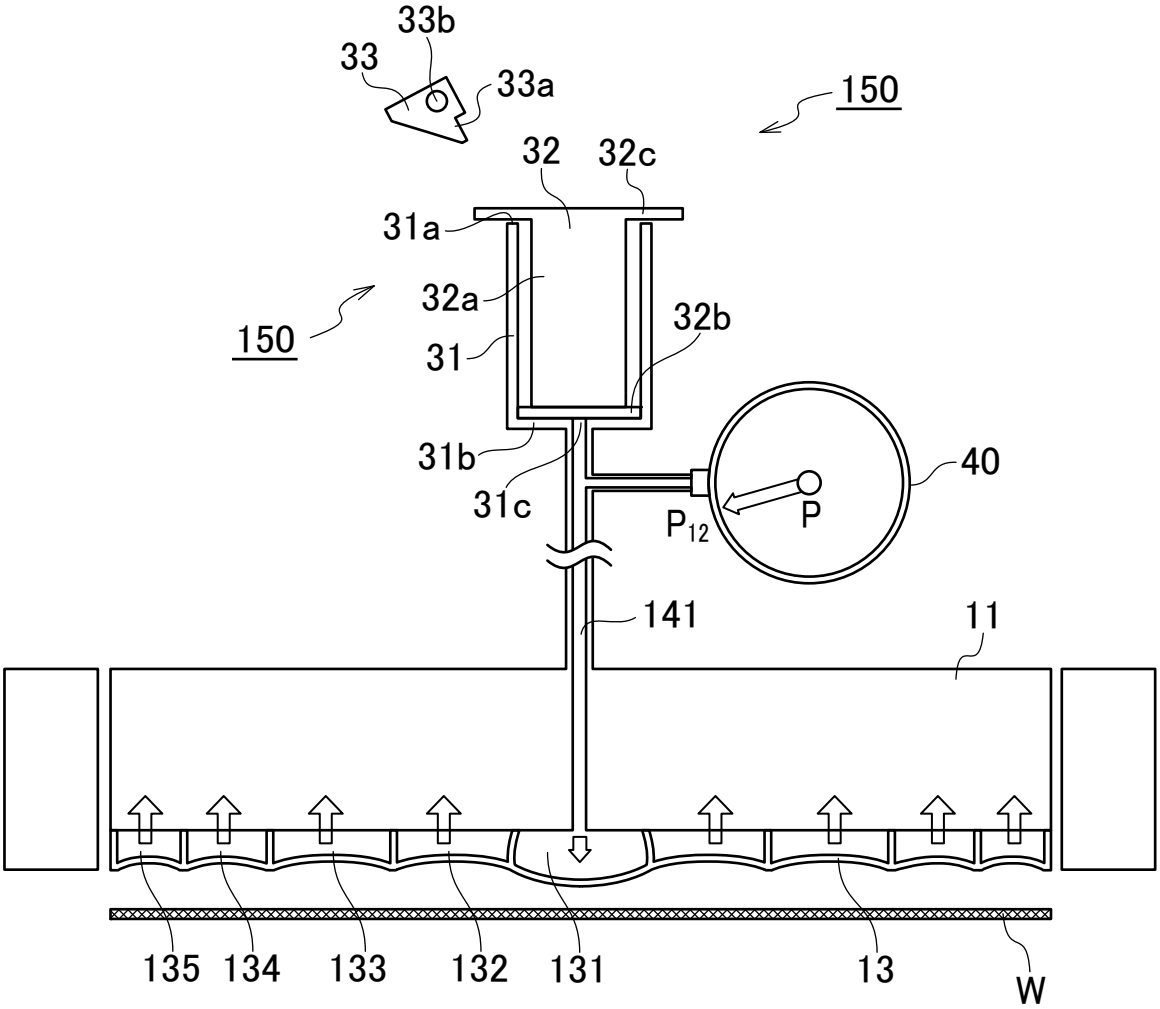
33b
33
33a
150
32
32c
31a
32a
150
32b
31
31b
31c
40
P
P_{12}
141
11
135
134
133
132
131
13
W

FIG.16

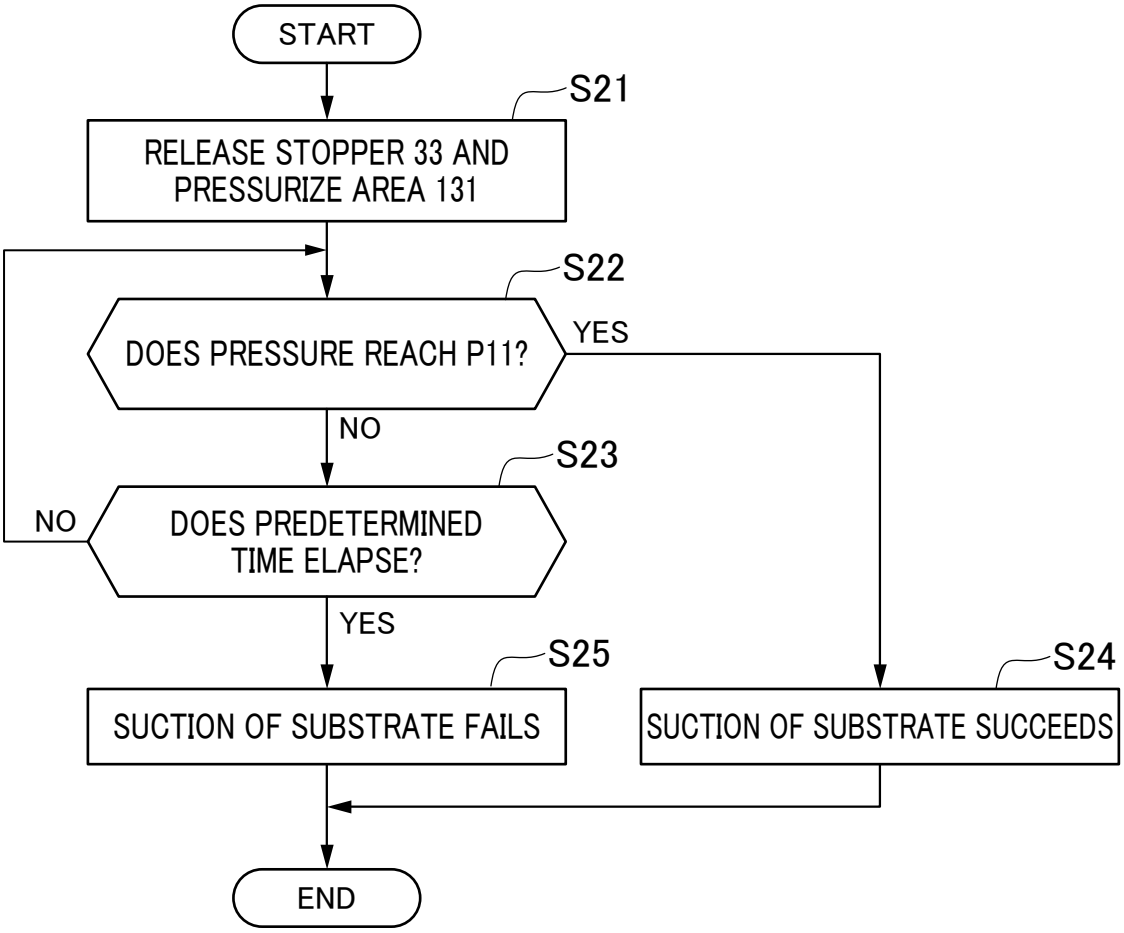
START
S21
RELEASE STOPPER 33 AND PRESSURIZE AREA 131
S22
DOES PRESSURE REACH P11?
YES
NO
S23
NO
DOES PREDETERMINED TIME ELAPSE?
YES
S25
S24
SUCTION OF SUBSTRATE FAILS
SUCTION OF SUBSTRATE SUCCEEDS
END

FIG.17

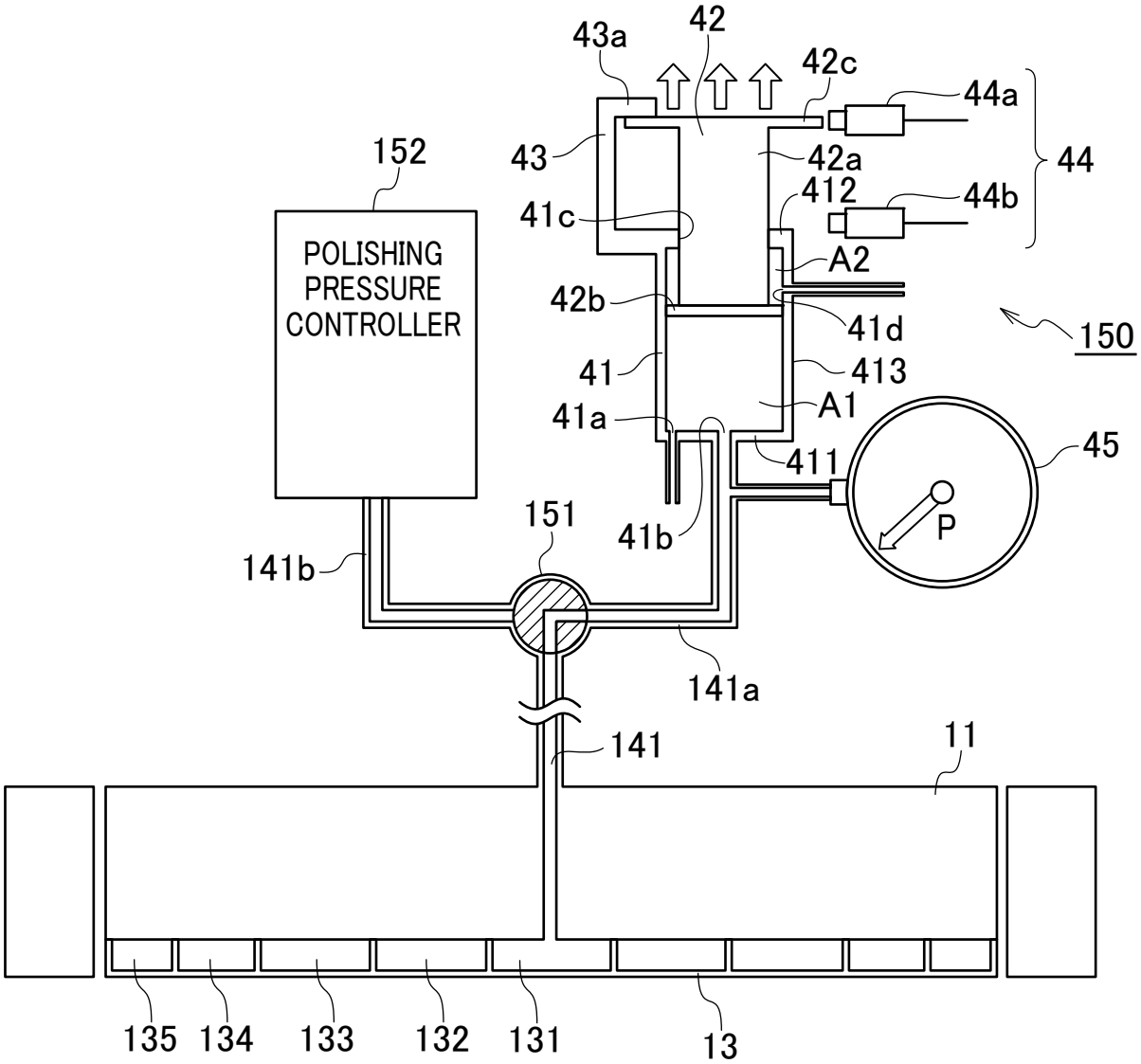
43a
42
42c
44a
44
152
43
42a
412
44b
41c
POLISHING
PRESSURE
CONTROLLER
A2
42b
41d
150
41
413
41a
A1
45
411
151
41b
P
141b
141a
141
11
135
134
133
132
131
13

FIG.18

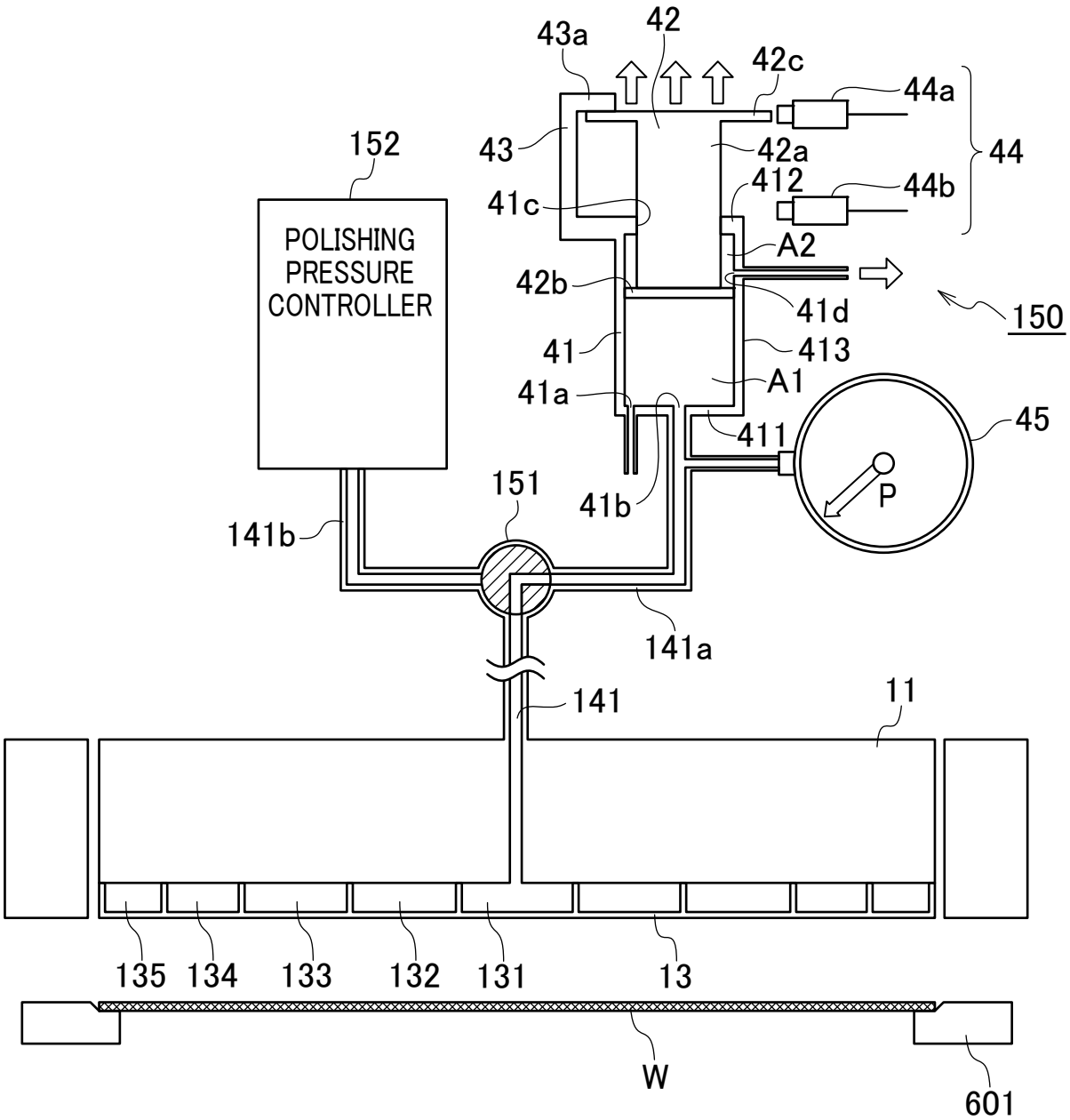
43a
42
42c
44a
44
152
43
42a
412
44b
41c
POLISHING
PRESSURE
CONTROLLER
A2
42b
41d
150
41
413
A1
41a
45
411
P
151
41b
141b
141a
141
11
135
134
133
132
131
13
W
601

FIG.19A

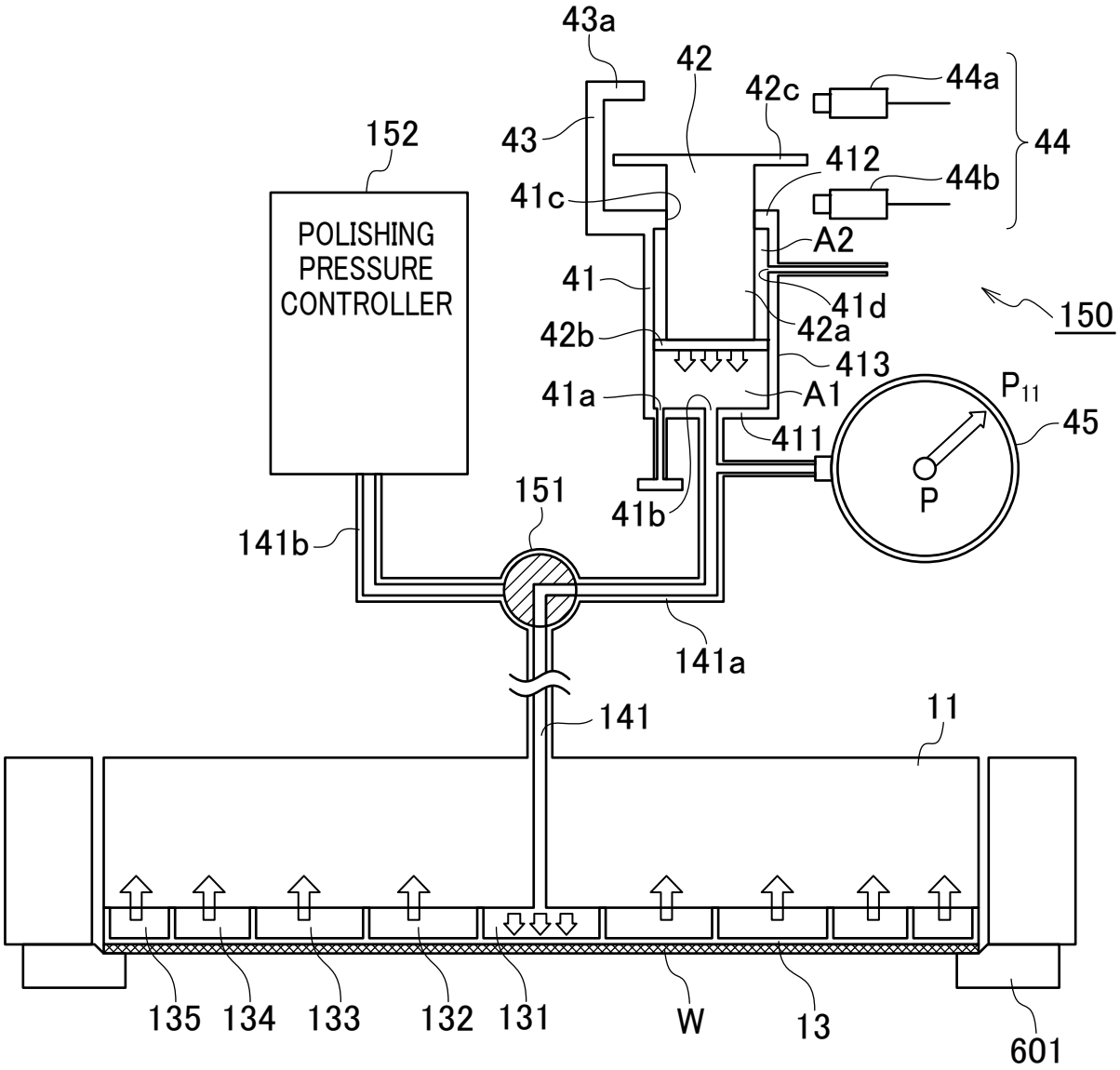
43a
42
42c
44a
44
152
43
412
44b
41c
POLISHING
PRESSURE
CONTROLLER
A2
41
41d
150
42b
42a
413
41a
A1
P_{11}
45
411
151
41b
P
141b
141a
141
11
135
134
133
132
131
W
13
601

FIG.19B

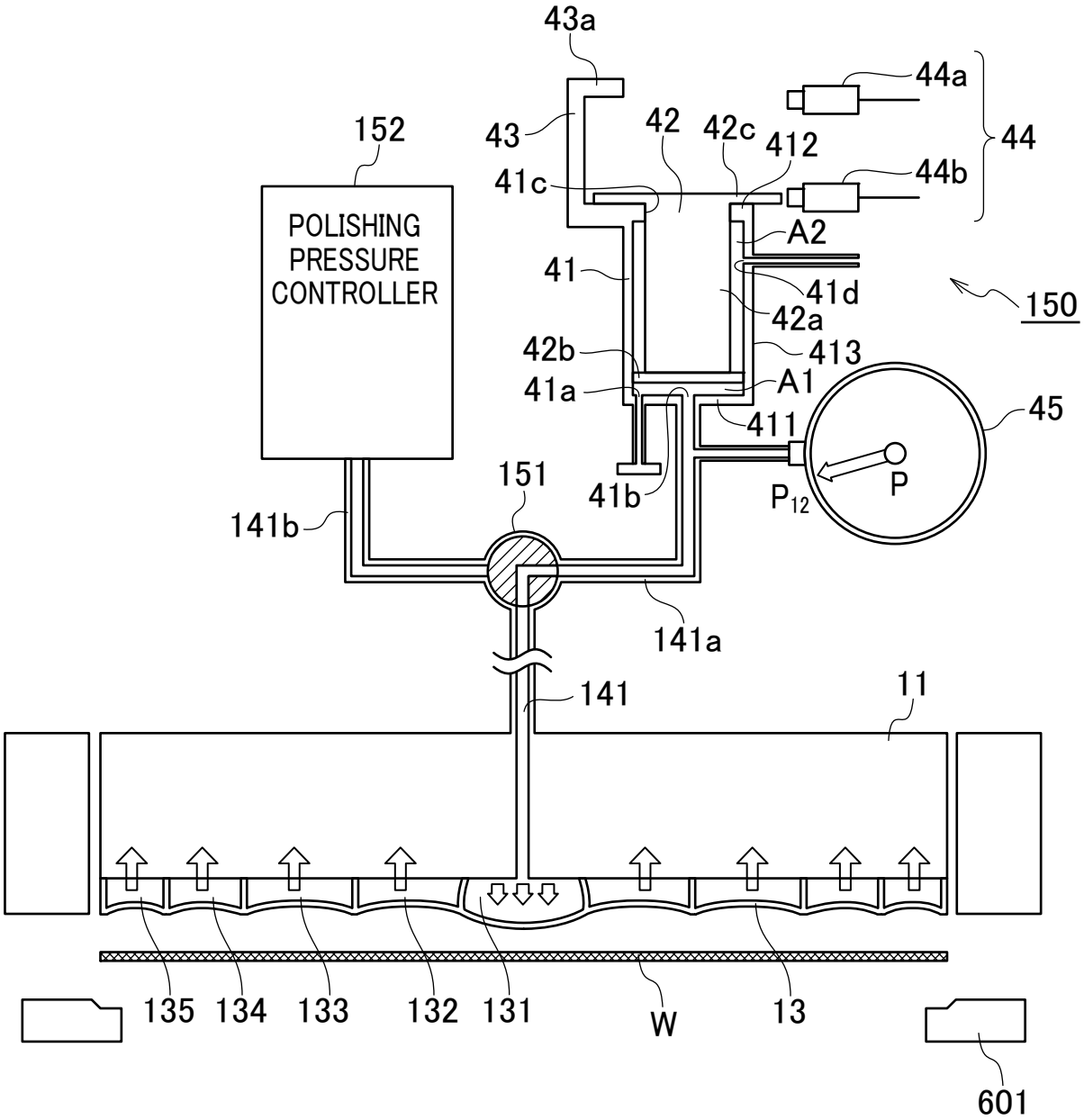
43a
44a
44
152
43
42
42c
412
44b
41c
POLISHING
PRESSURE
CONTROLLER
A2
41
41d
150
42a
42b
413
41a
A1
45
411
151
41b
P
P_{12}
141b
141a
141
11
135
134
133
132
131
W
13
601

FIG.20

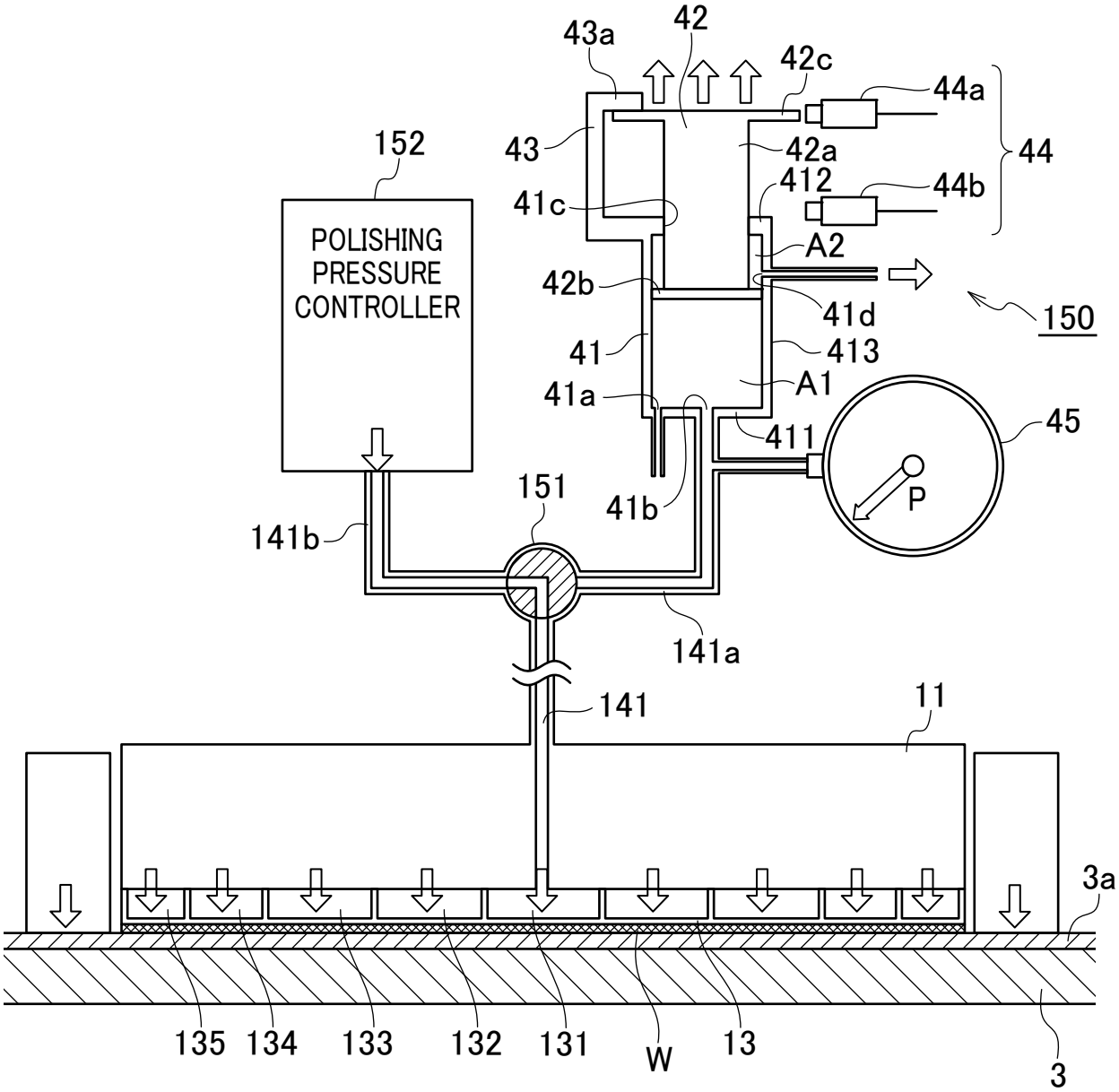
43a
42
42c
44a
44
152
43
42a
412
44b
41c
POLISHING
PRESSURE
CONTROLLER
A2
42b
41d
150
41
413
41a
A1
45
411
151
41b
P
141b
141a
141
11
3a
135
134
133
132
131
W
13
3

FIG.21

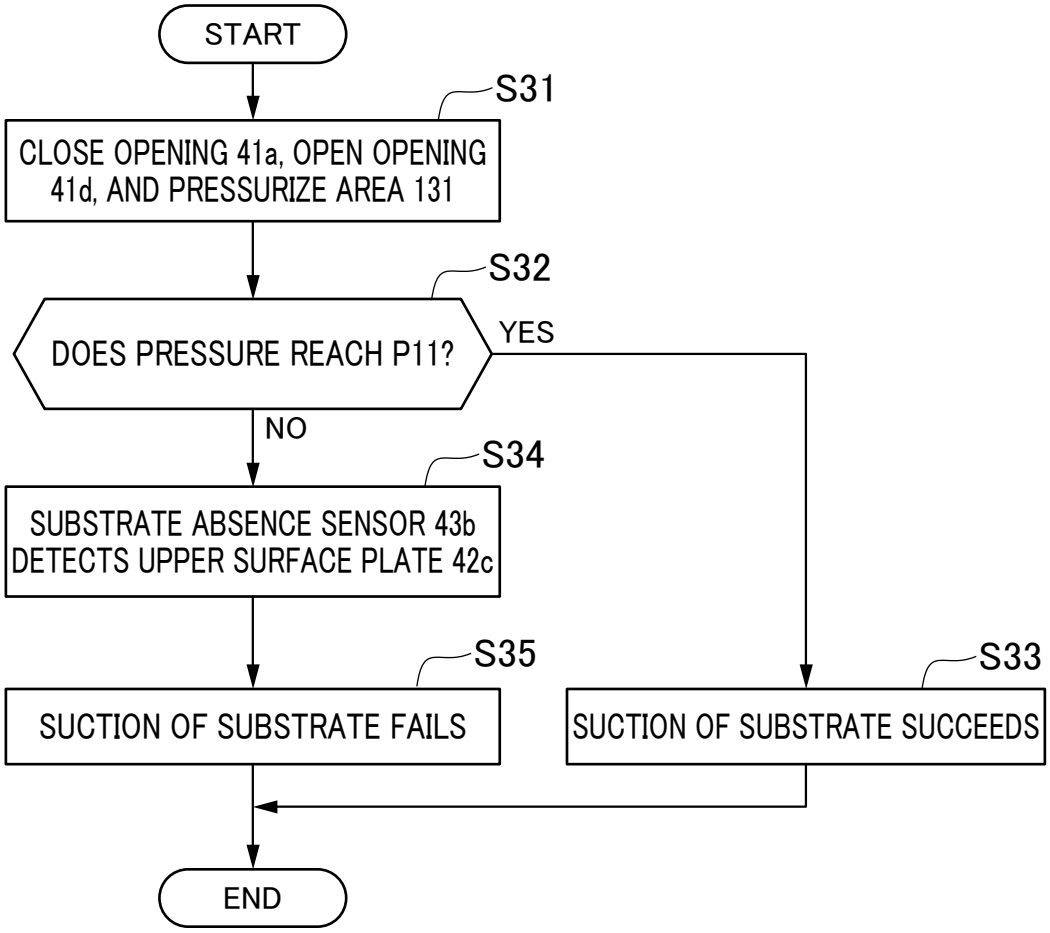
START
S31
CLOSE OPENING 41a, OPEN OPENING 41d, AND PRESSURIZE AREA 131
S32
DOES PRESSURE REACH P11?
YES
NO
S34
SUBSTRATE ABSENCE SENSOR 43b DETECTS UPPER SURFACE PLATE 42c
S35
SUCTION OF SUBSTRATE FAILS
S33
SUCTION OF SUBSTRATE SUCCEEDS
END

FIG.22

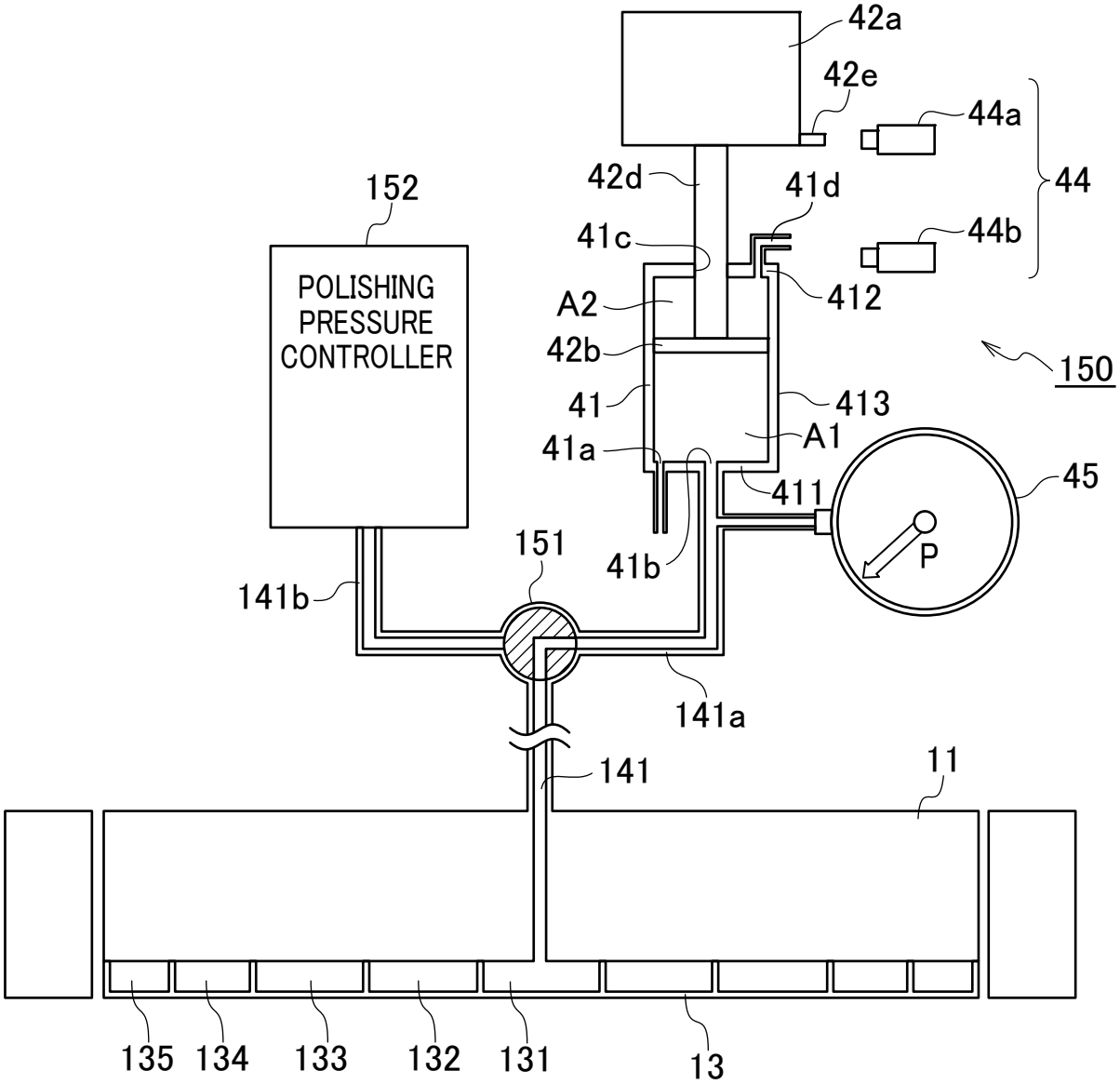
42a
42e
44a
44
42d
41d
44b
152
41c
POLISHING
PRESSURE
CONTROLLER
412
A2
42b
150
41
413
A1
41a
45
411
P
151
41b
141b
141a
141
11
135
134
133
132
131
13

FIG.23A

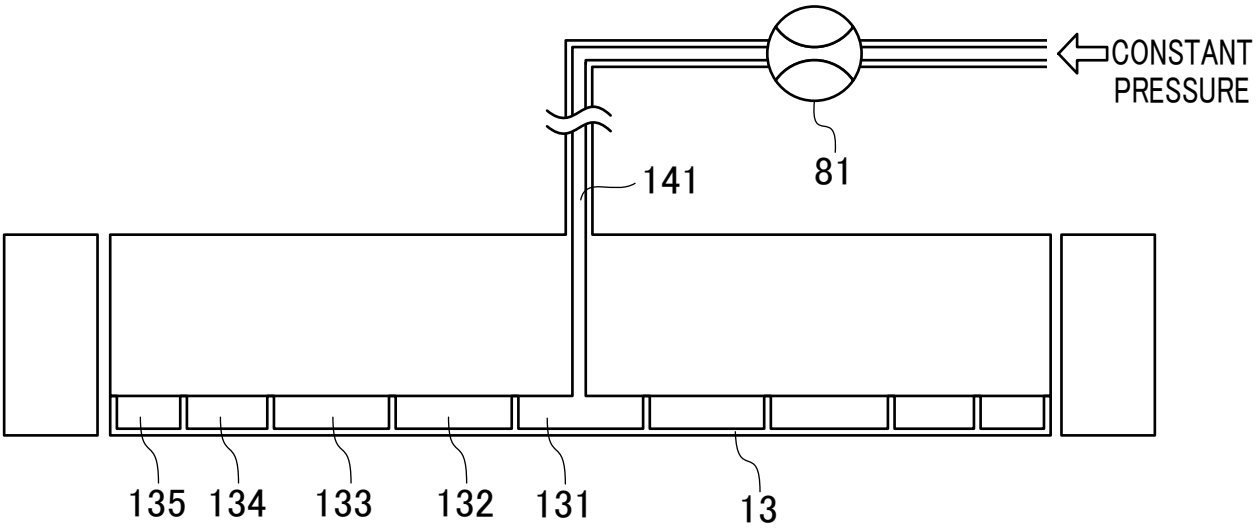

FIG.23B

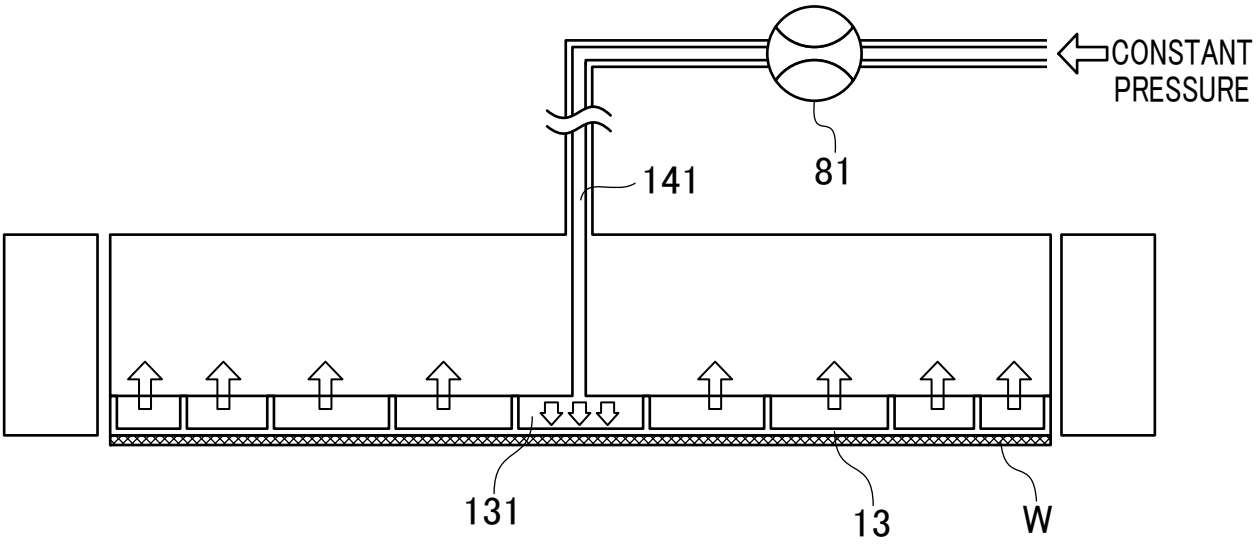

FIG.23C

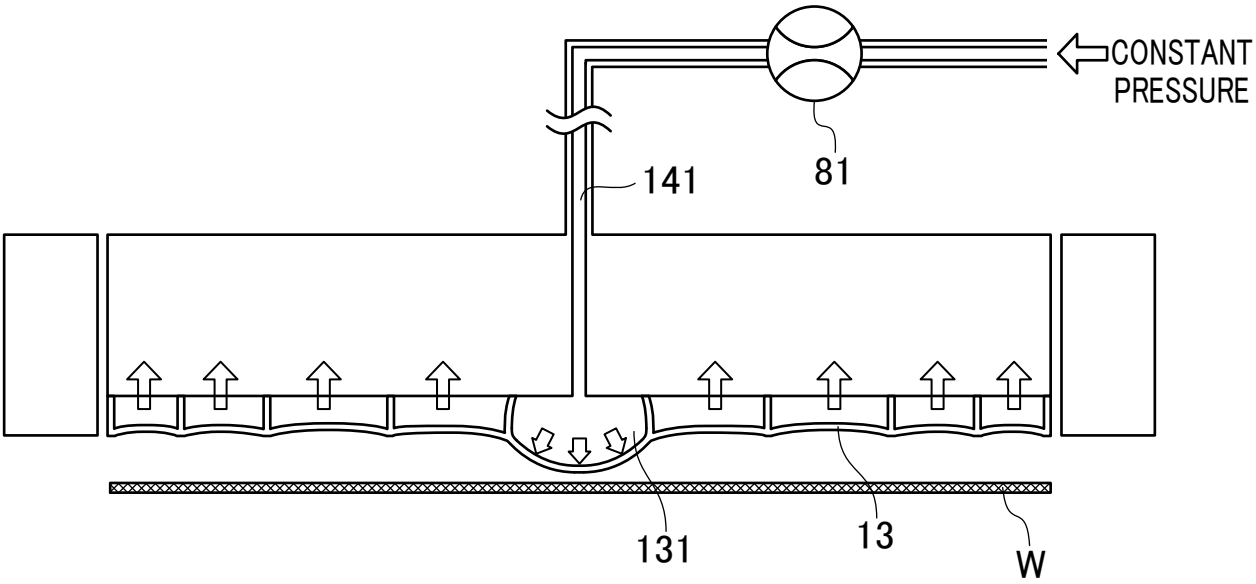

FIG.24

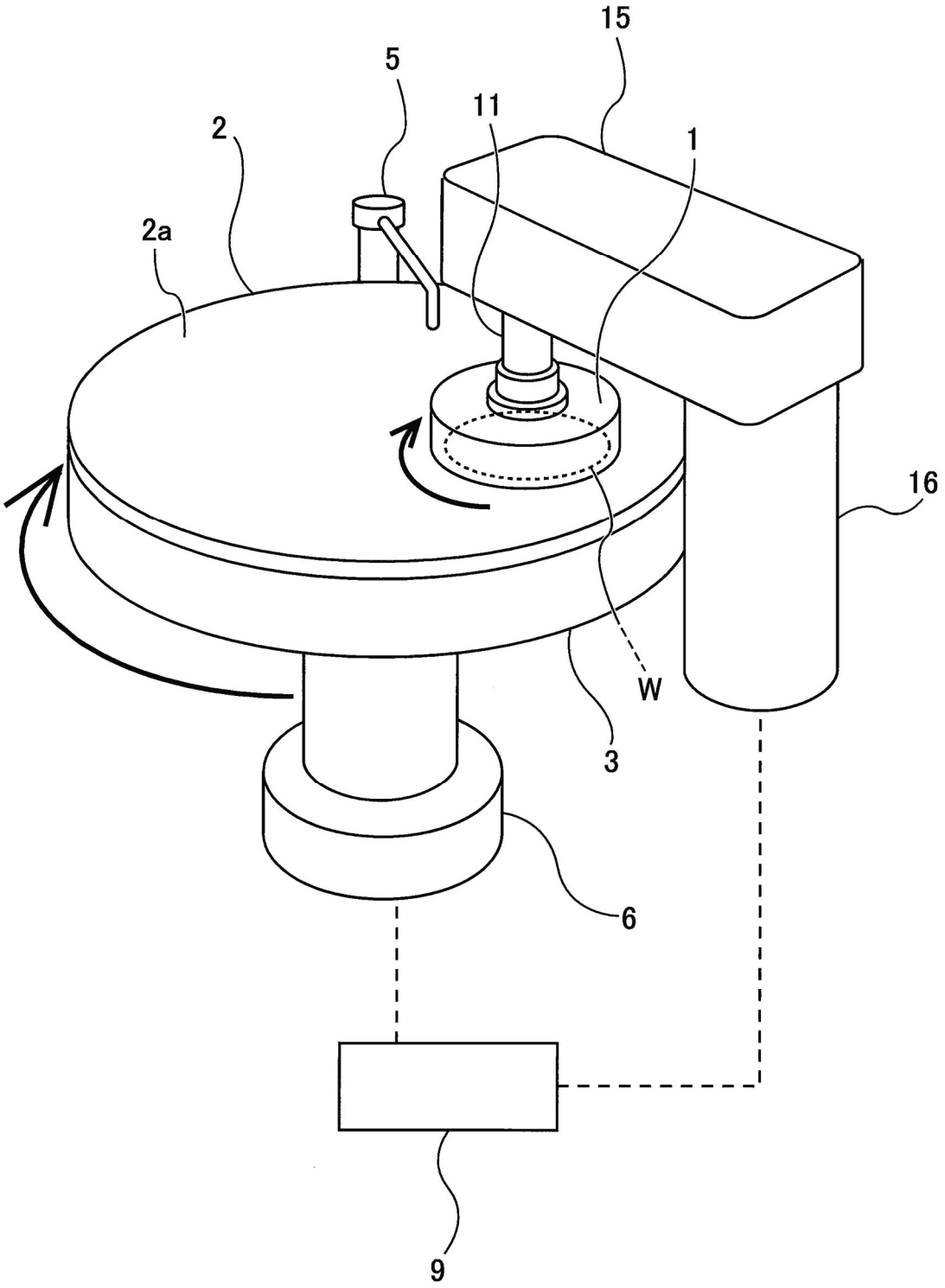

FIG.25

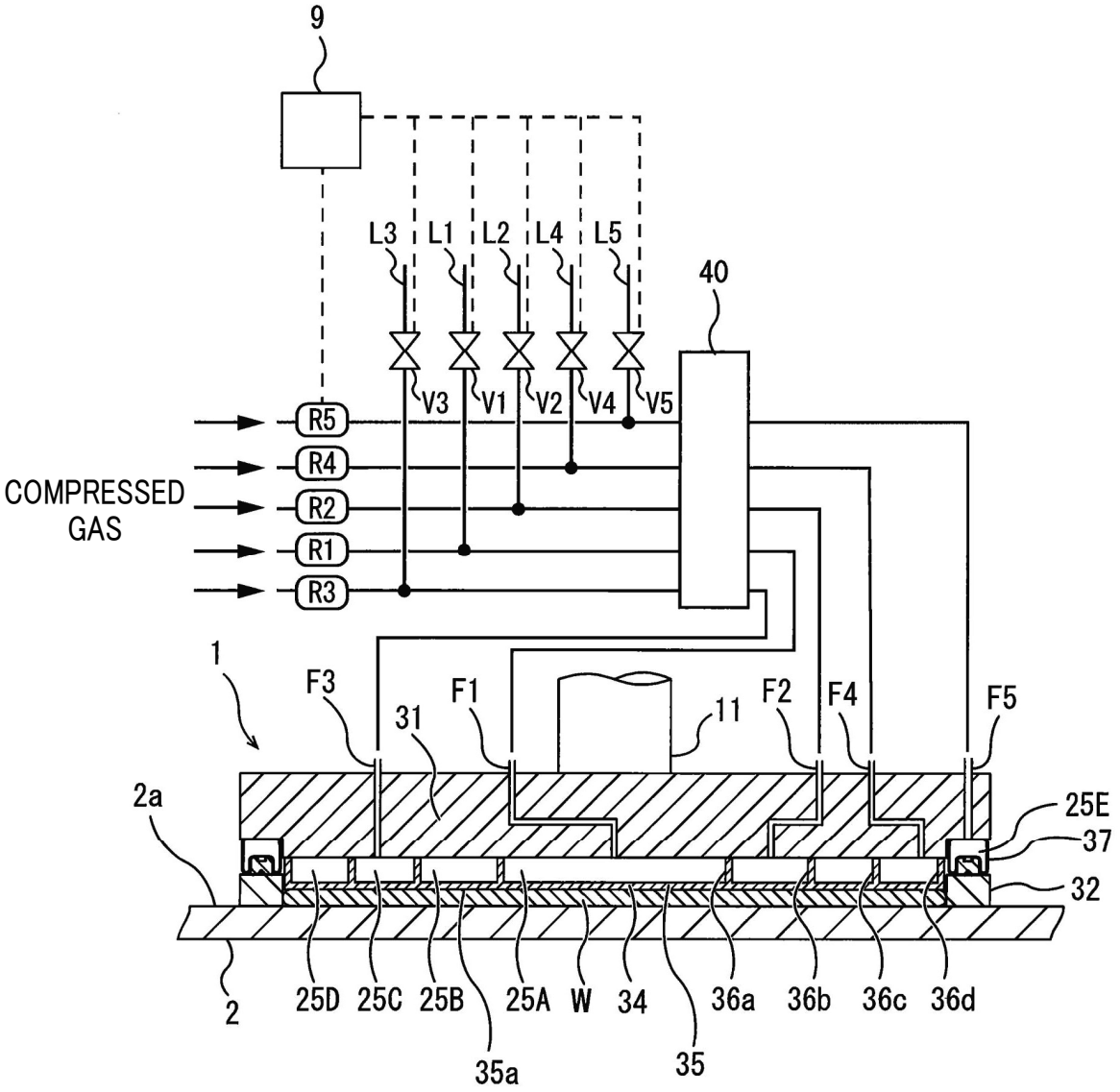
9
L3
L1
L2
L4
L5
40
V3
V1
V2
V4
V5
R5
R4
R2
R1
R3
COMPRESSED GAS
1
F3
F1
31
11
F2
F4
F5
2a
25E
37
32
2
25D
25C
25B
25A
W
34
36a
36b
36c
36d
35a
35

FIG.26

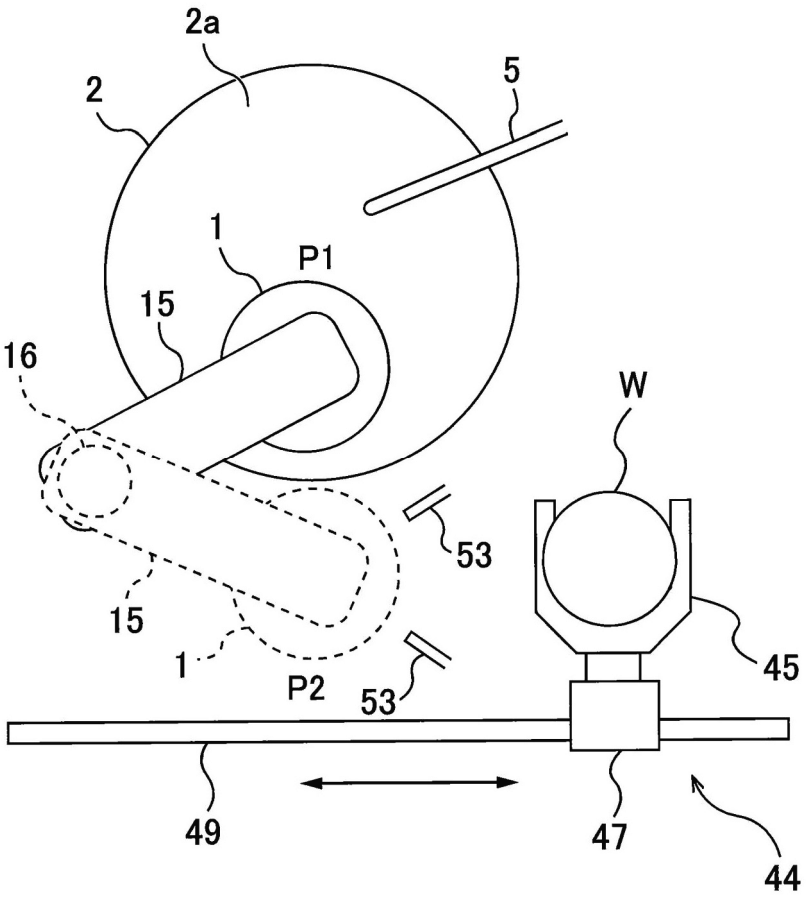
2a
2
5
1
P1
15
16
W
53
15
1
P2
53
45
49
47
44

FIG.27

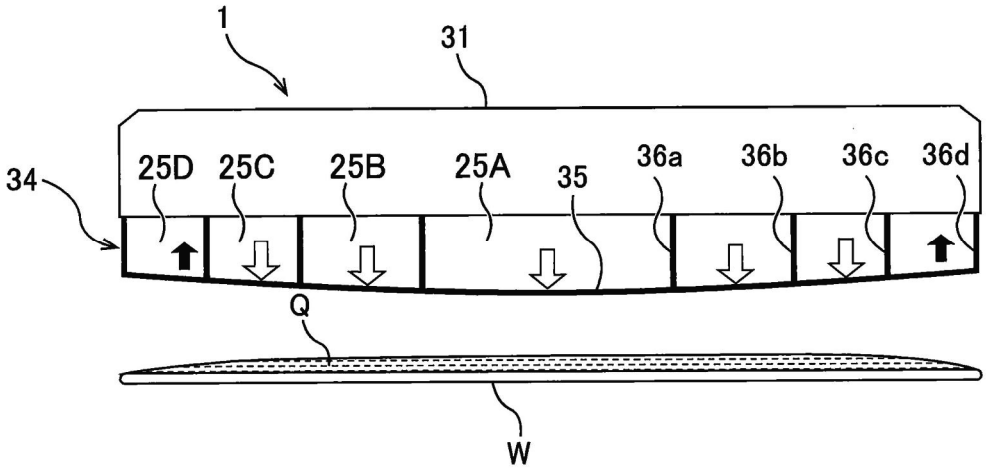
1
31
34
25D
25C
25B
25A
35
36a
36b
36c
36d
Q
W

FIG.28

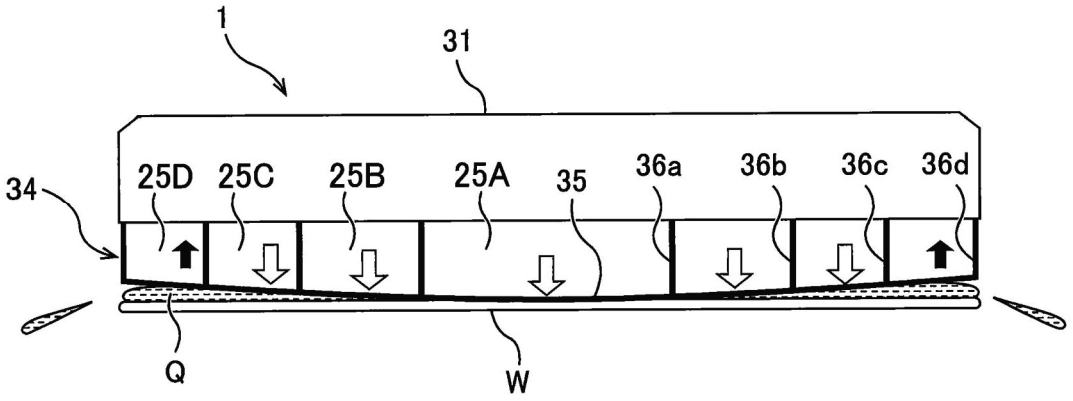
1
31
34
25D
25C
25B
25A
35
36a
36b
36c
36d
Q
W

FIG.29

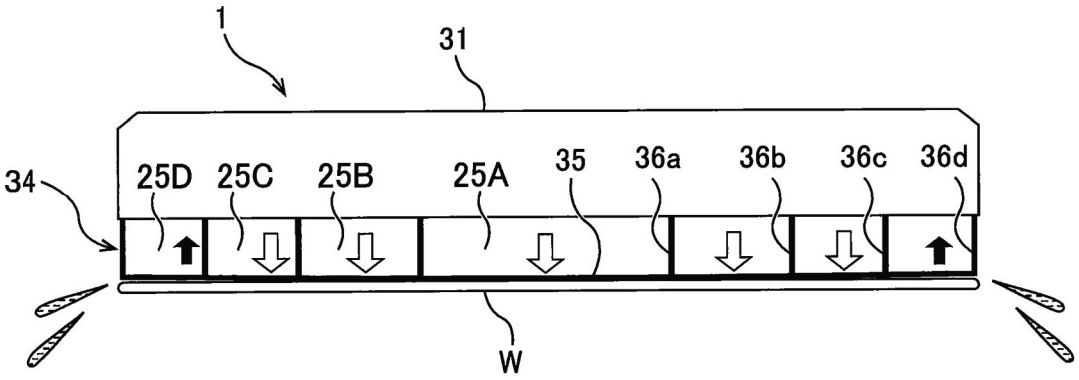
1
31
34
25D
25C
25B
25A
35
36a
36b
36c
36d
W

FIG.30

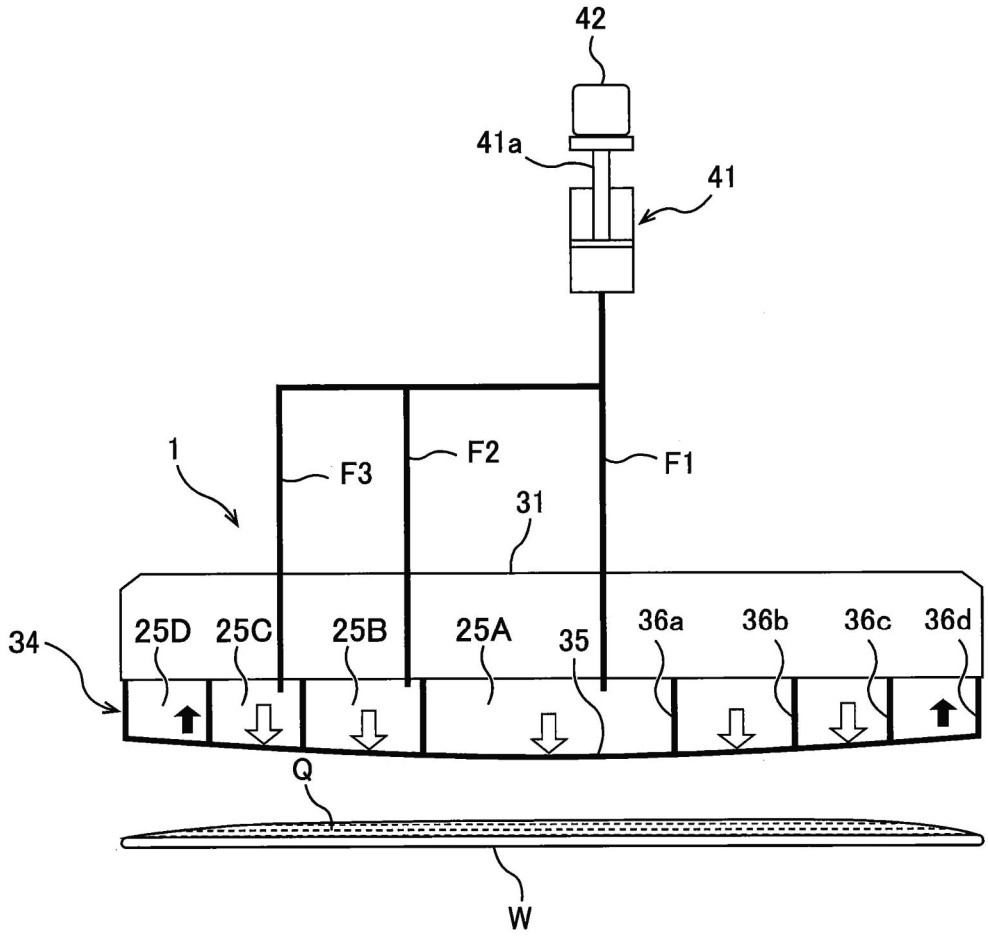
42
41a
41
1
F3
F2
F1
31
34
25D
25C
25B
25A
35
36a
36b
36c
36d
Q
W

FIG.31

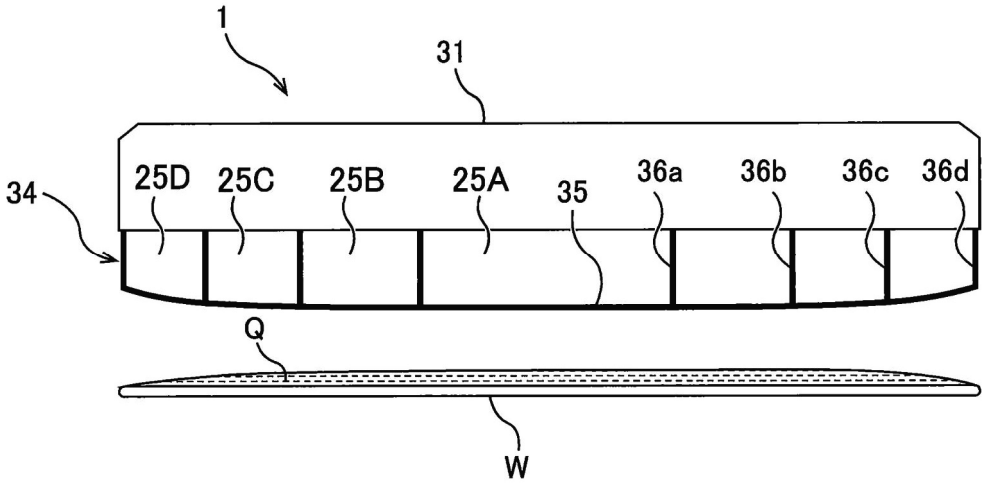
1
31
34
25D
25C
25B
25A
35
36a
36b
36c
36d
Q
W

FIG.32

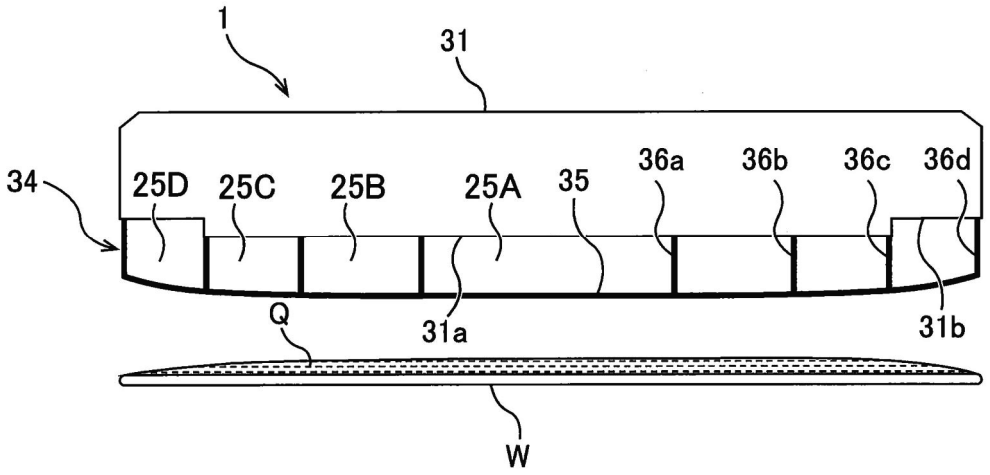

FIG.33

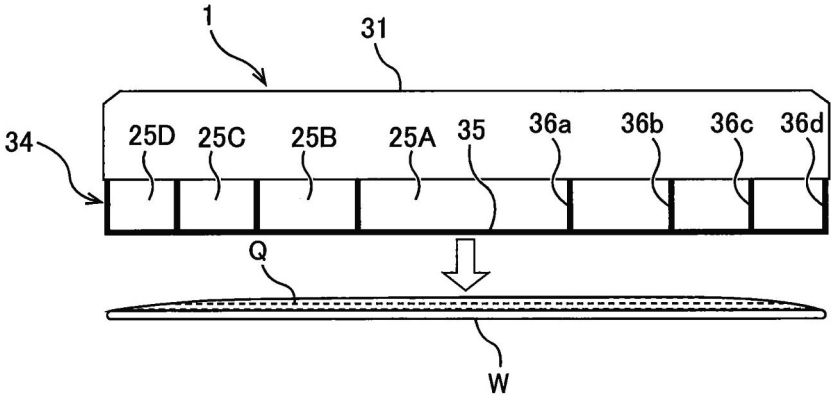

FIG.34

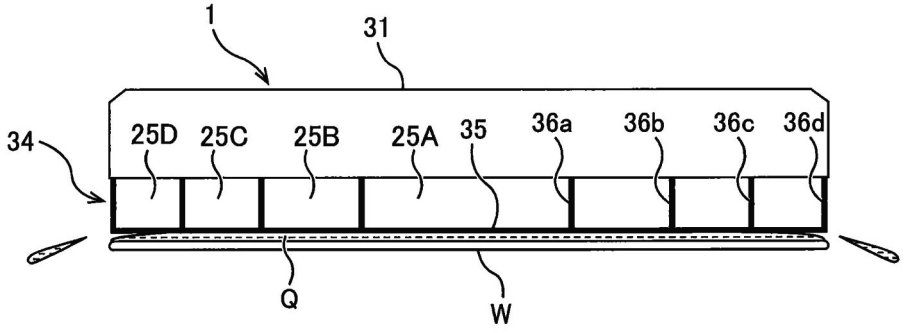

FIG.35

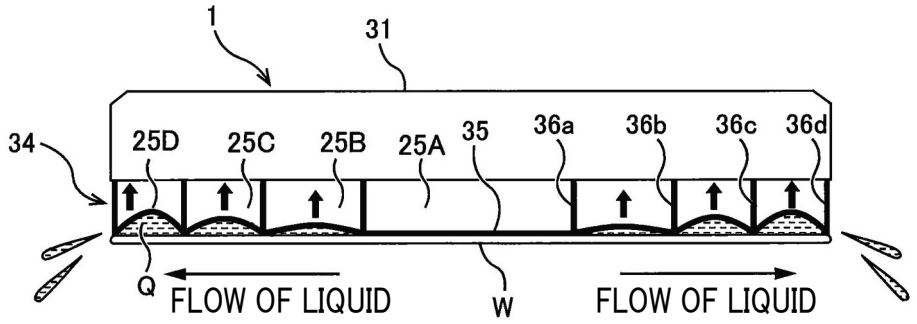

FIG.36

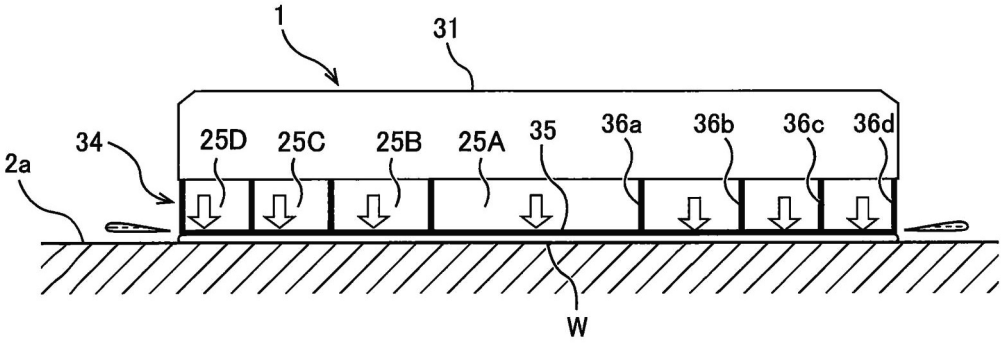

FIG.37

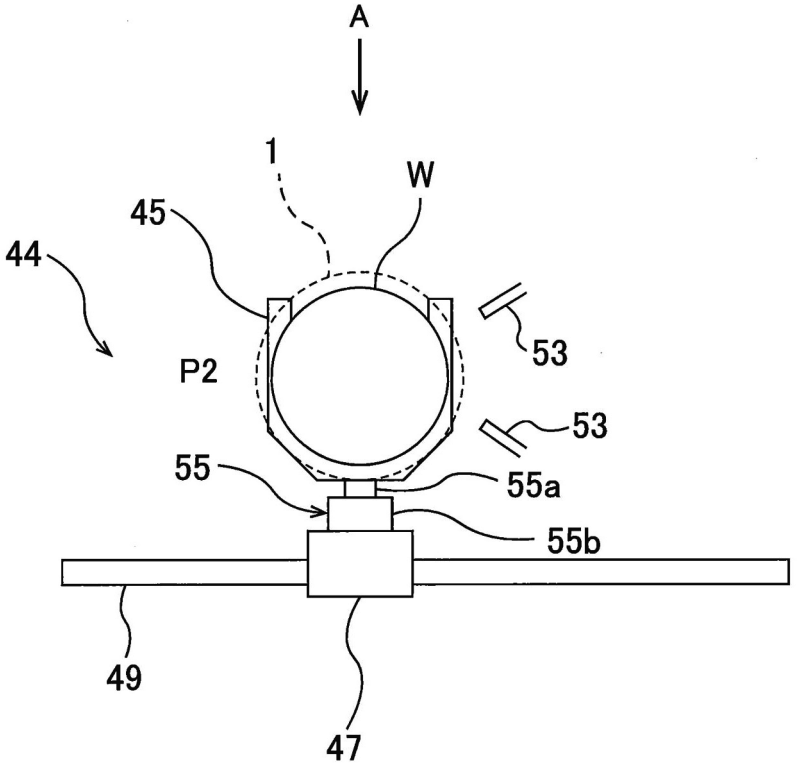

FIG.38

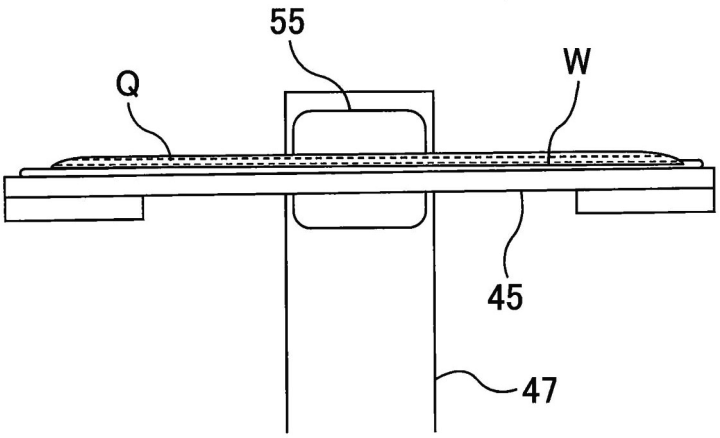

FIG.39

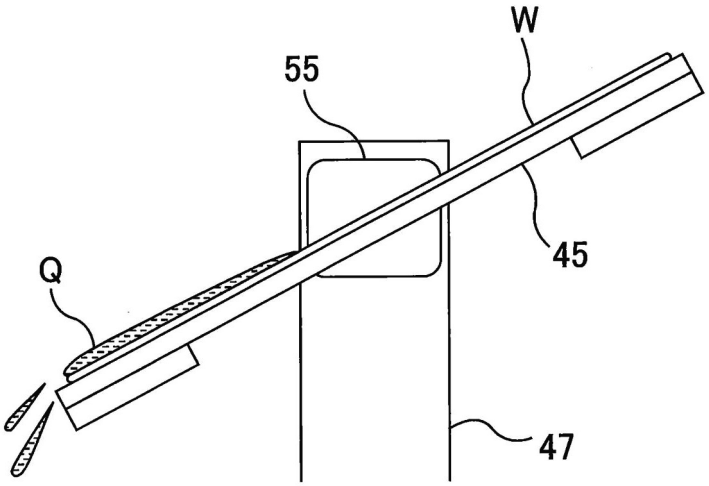

FIG.40

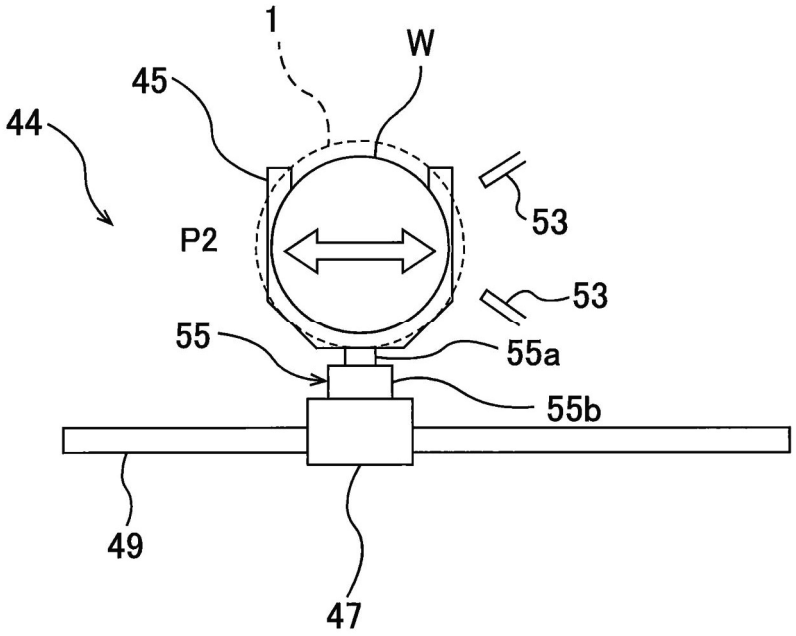

FIG.41

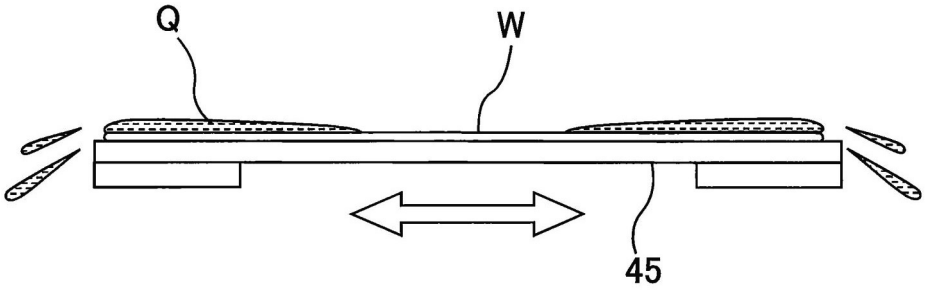

FIG.42

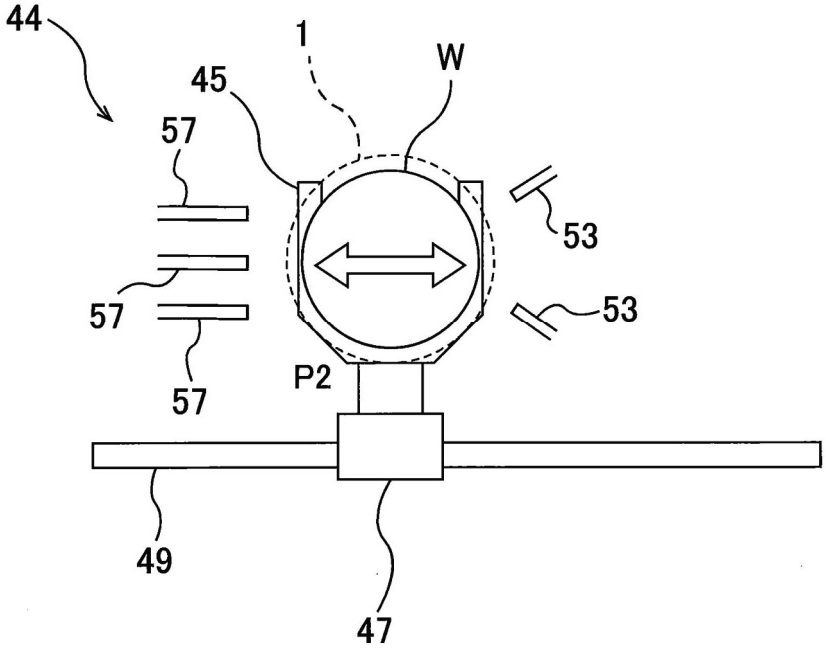

FIG.43

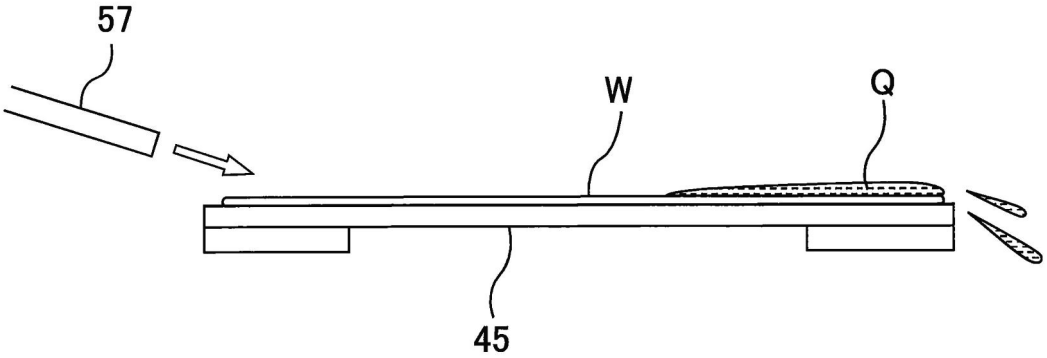

FIG.44

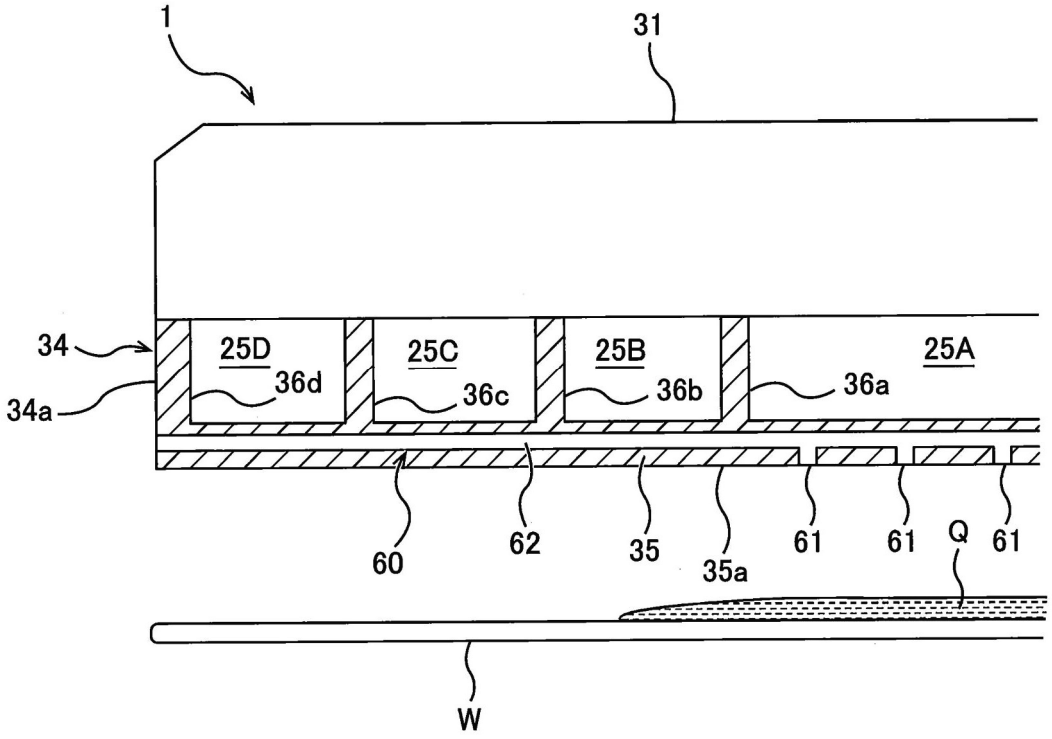
1
31
34
34a
25D
25C
25B
25A
36d
36c
36b
36a
60
62
35
35a
61
61
Q
61
W

FIG.45

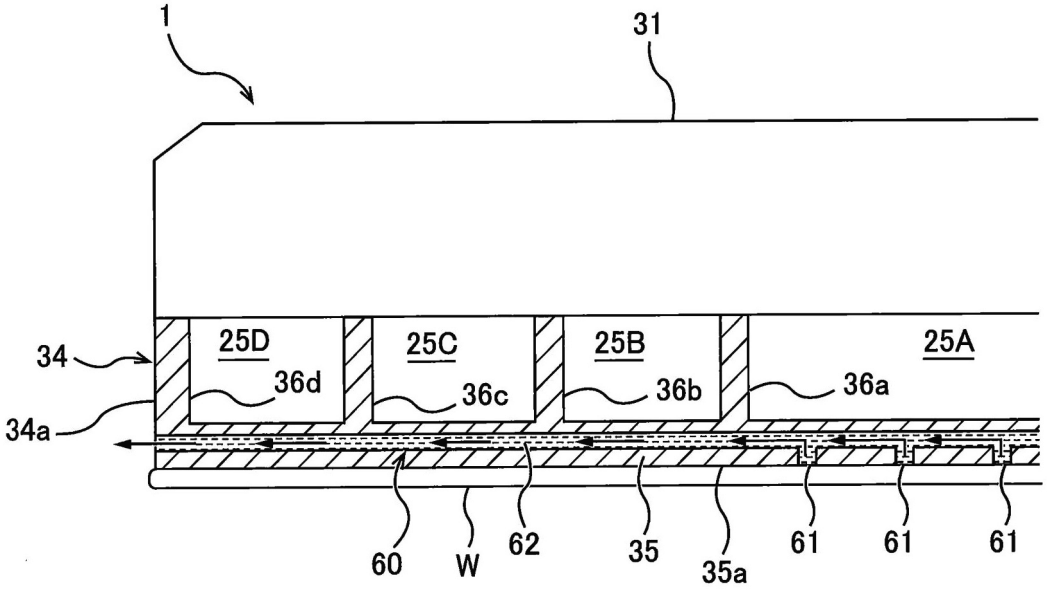
1
31
34
34a
25D
25C
25B
25A
36d
36c
36b
36a
60
W
62
35
35a
61
61
61

FIG.46

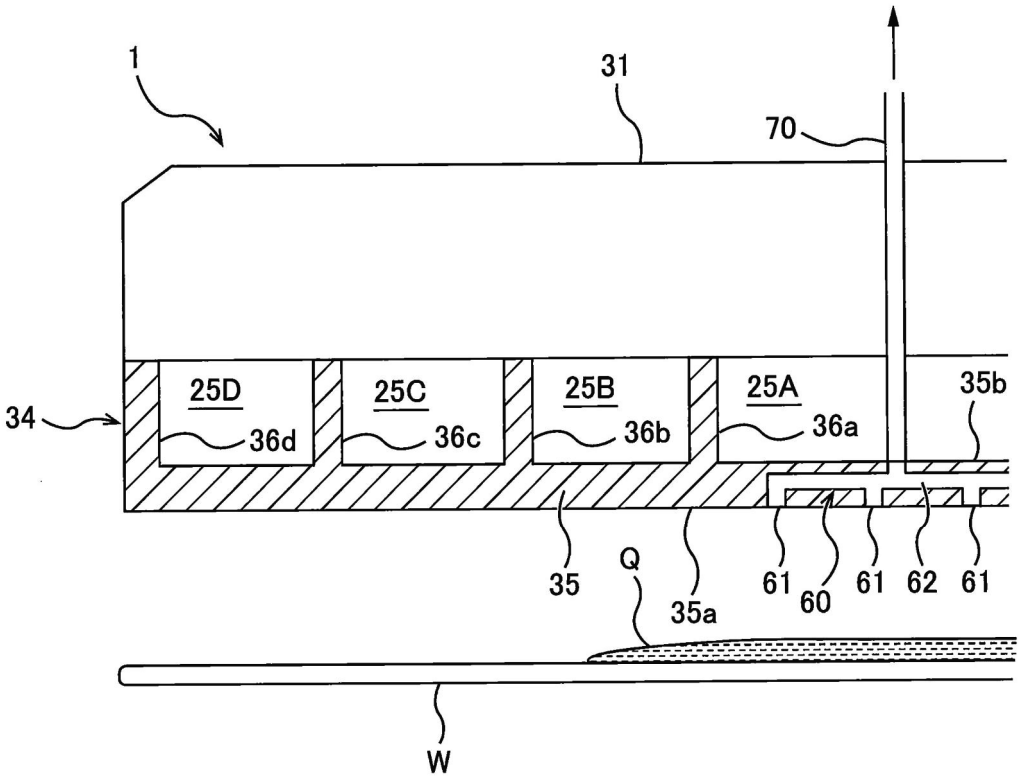
1
31
70
34
25D
36d
25C
36c
25B
36b
25A
36a
35b
35
Q
35a
61
60
61
62
61
W

FIG.47

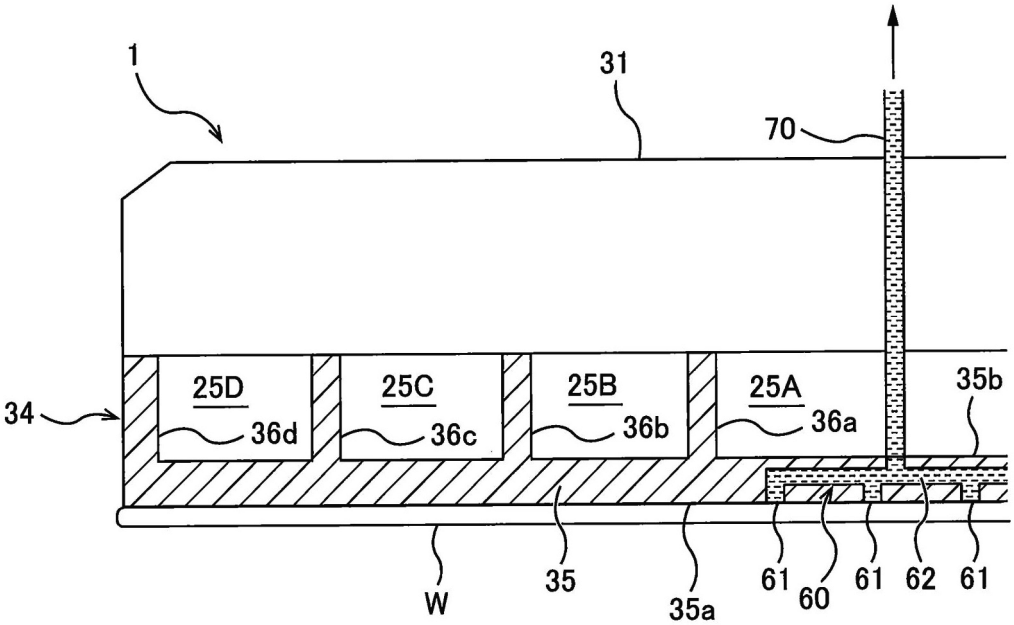
1
31
70
34
25D
36d
25C
36c
25B
36b
25A
36a
35b
W
35
35a
61
60
61
62
61

FIG.48

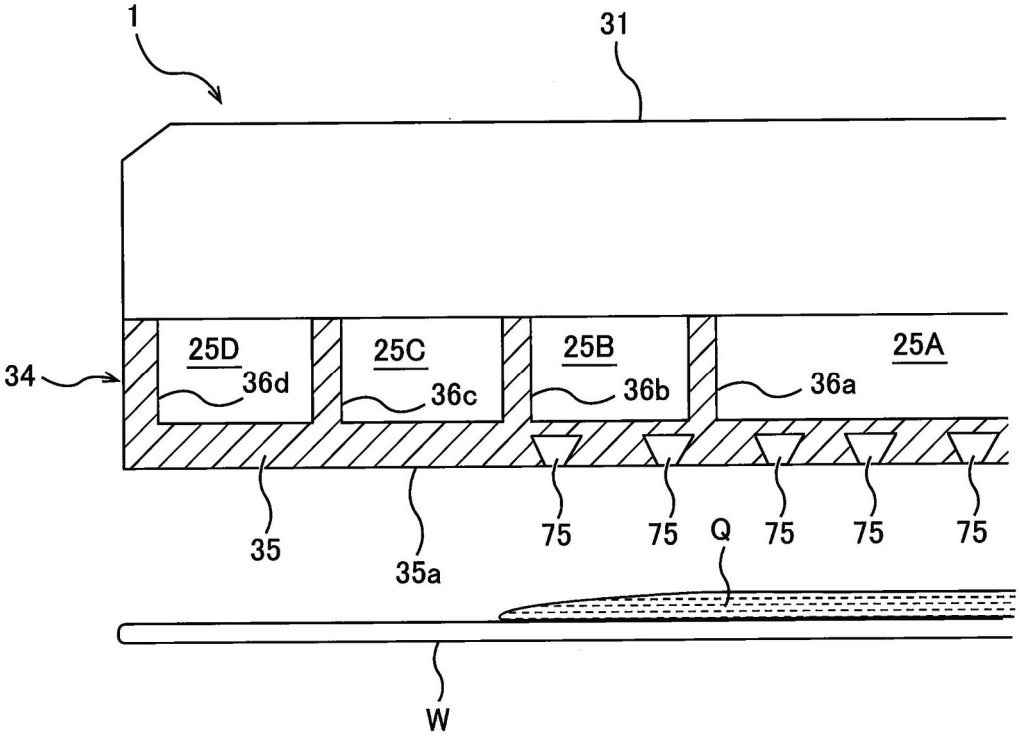
1
31
34
25D
36d
25C
36c
25B
36b
25A
36a
35
35a
75
75
Q
75
75
75
W

FIG.49

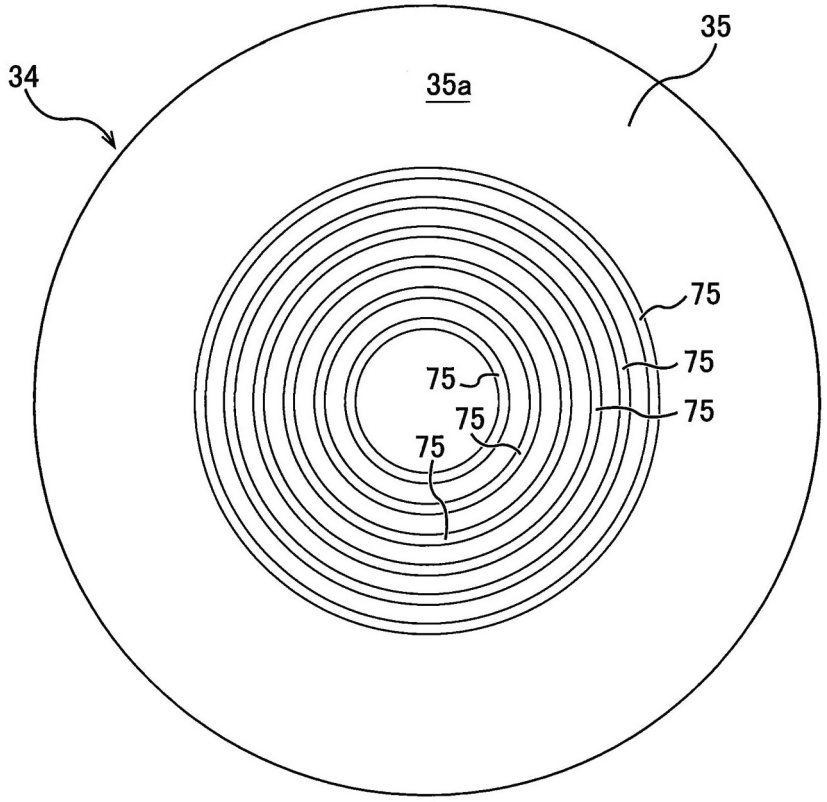
34
35
35a
75
75
75
75
75

FIG.50

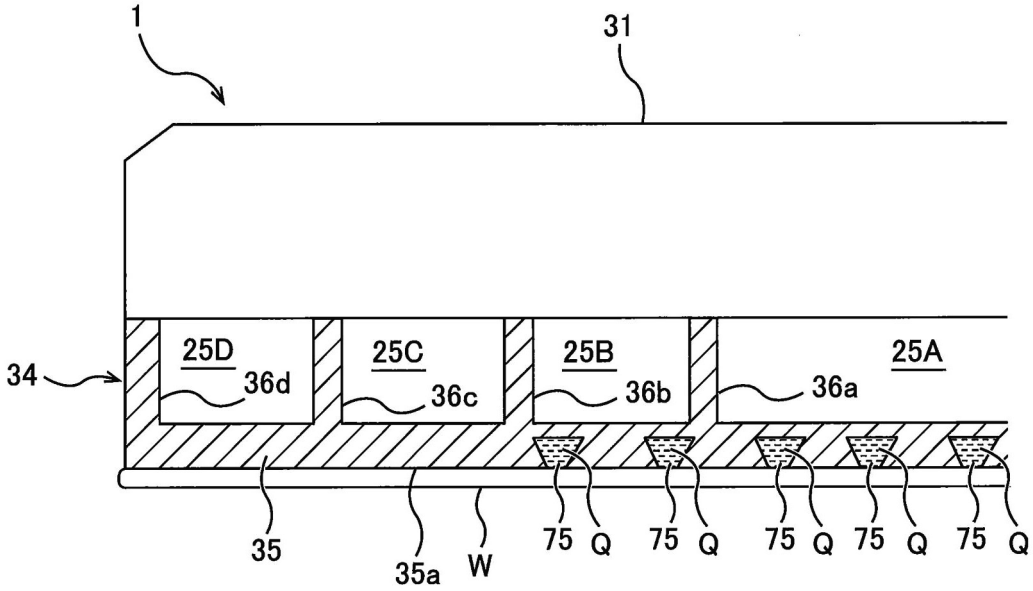
1
31
34
25D
36d
25C
36c
25B
36b
25A
36a
35
35a
W
75
Q
75
Q
75
Q
75
Q
75
Q

FIG.51

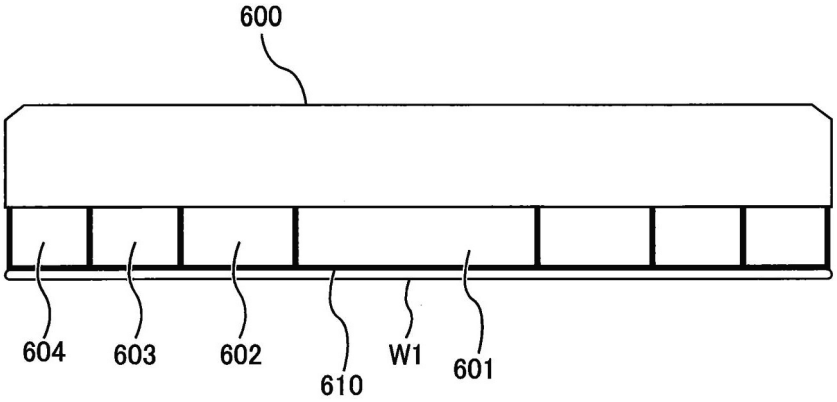
600
604
603
602
610
W1
601

FIG.52

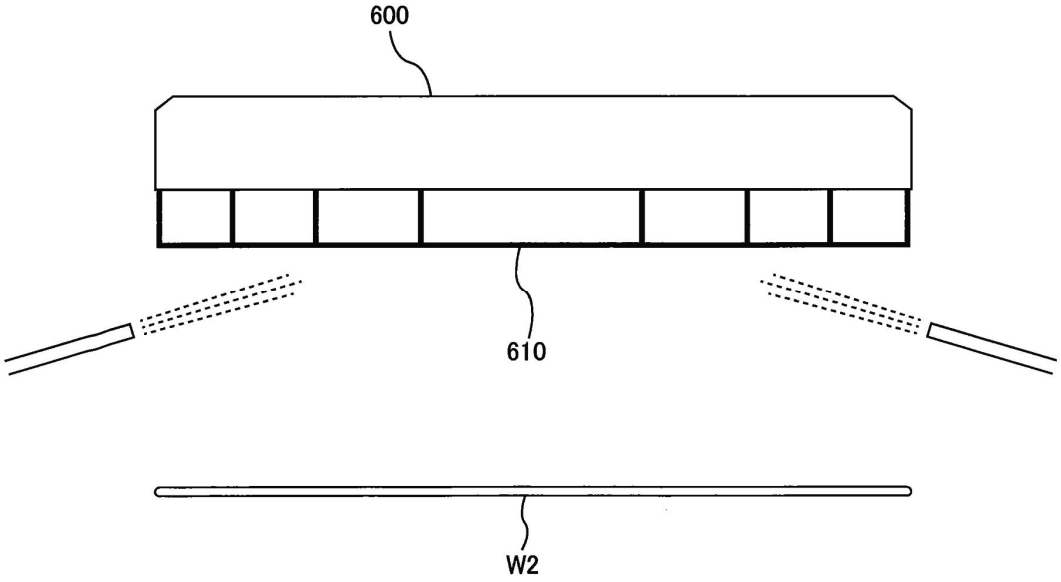

FIG.53

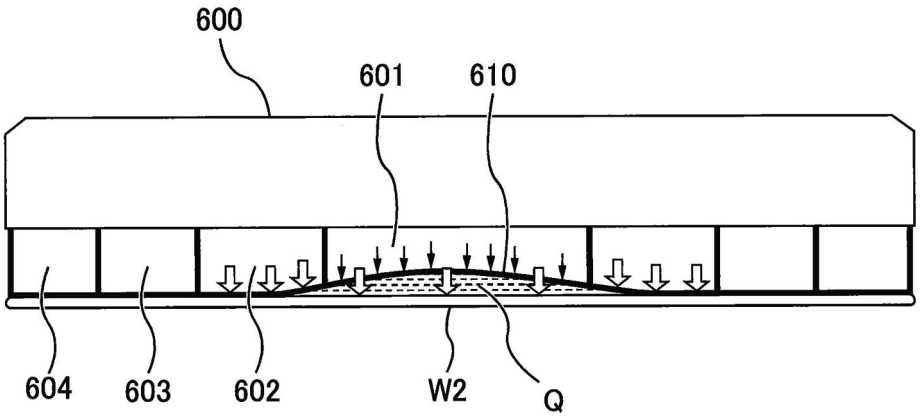

FIG.54

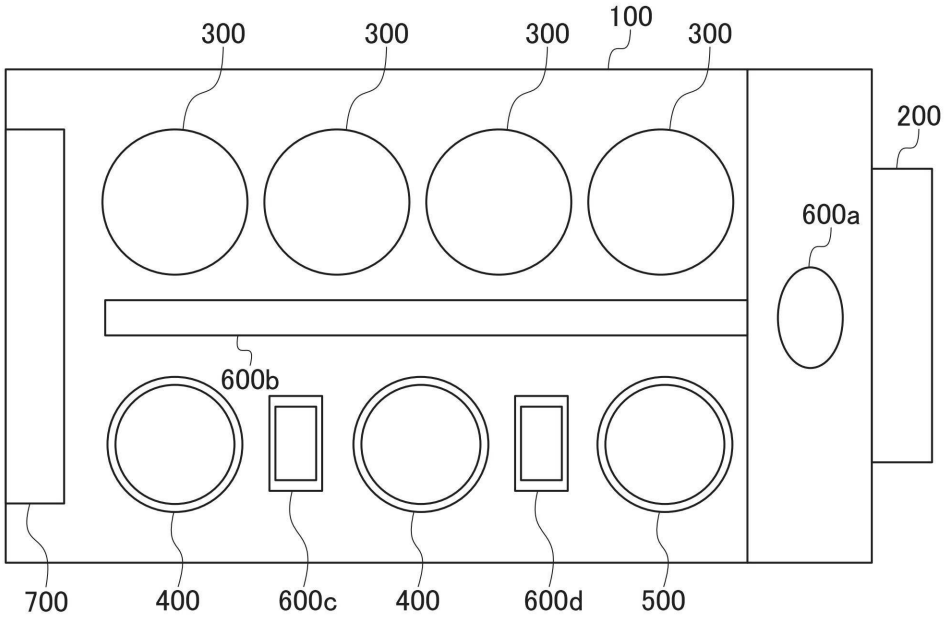

FIG.55

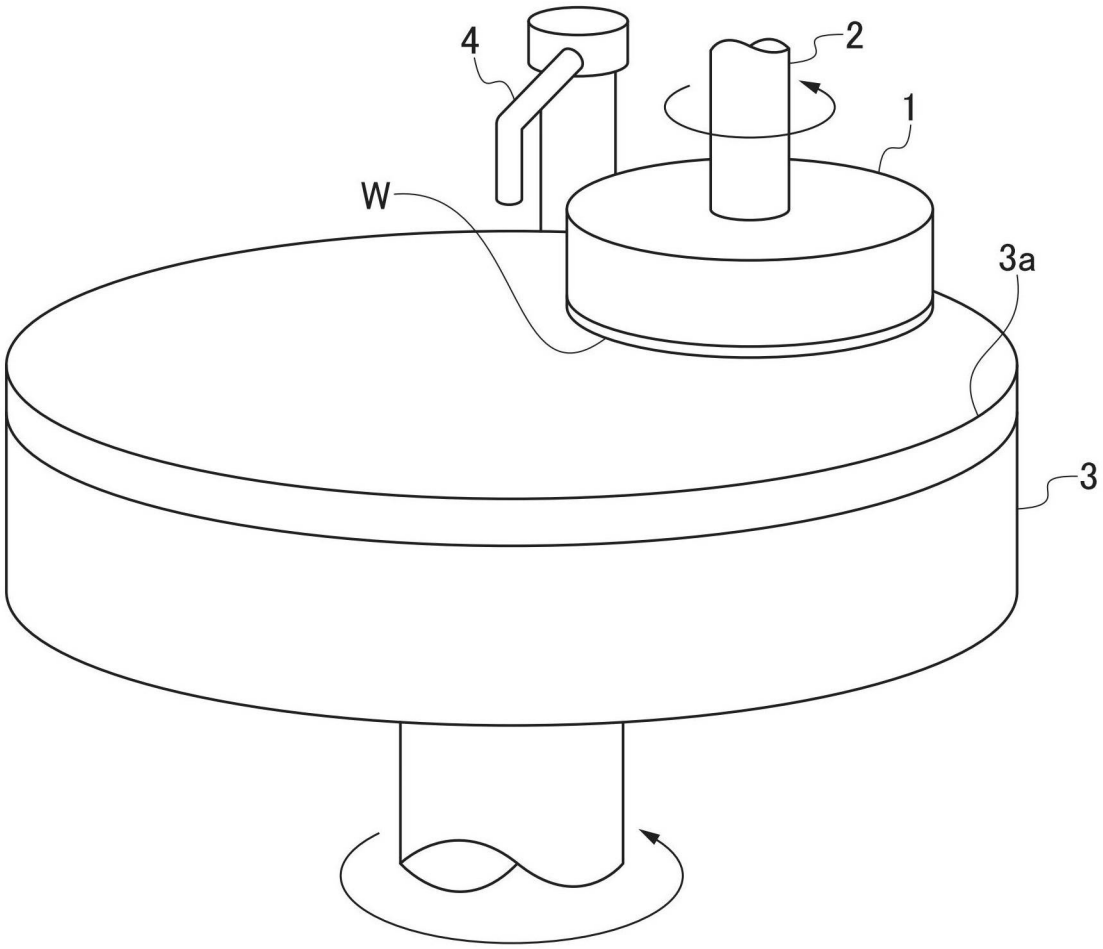

300

FIG.56

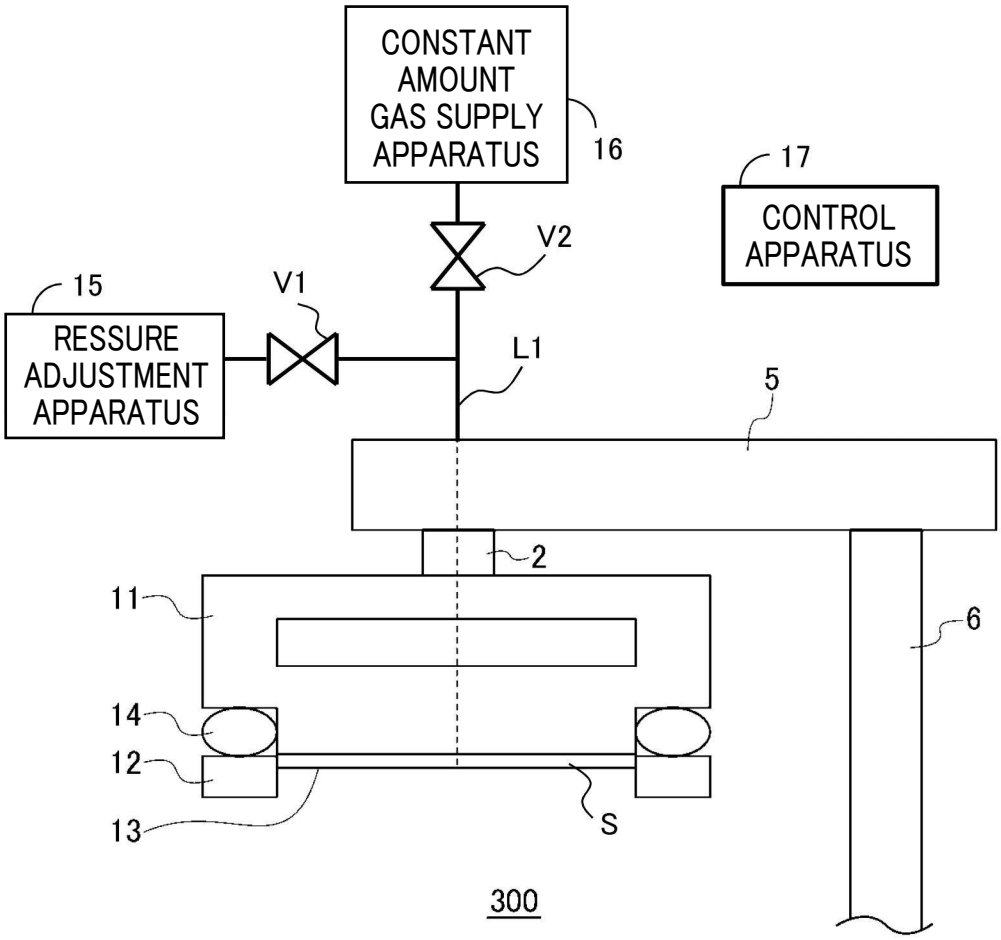
CONSTANT AMOUNT GAS SUPPLY APPARATUS
16
17
CONTROL APPARATUS
V2
15
V1
RESSURE ADJUSTMENT APPARATUS
L1
5
2
11
6
14
12
13
S
300

FIG.57A

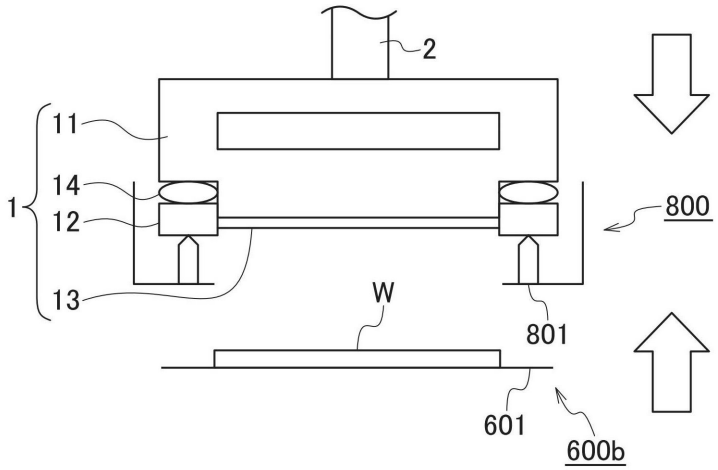

FIG.57B

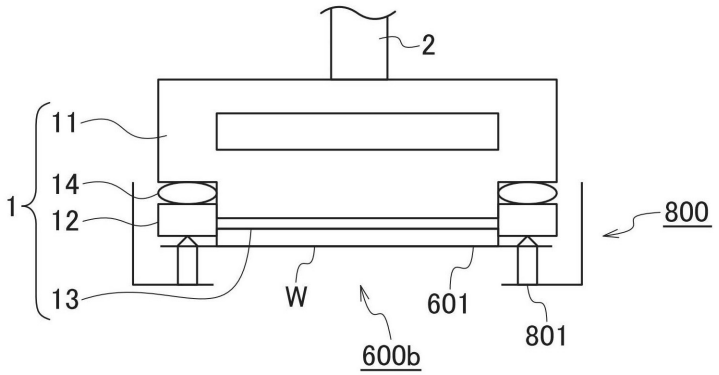

FIG.57C

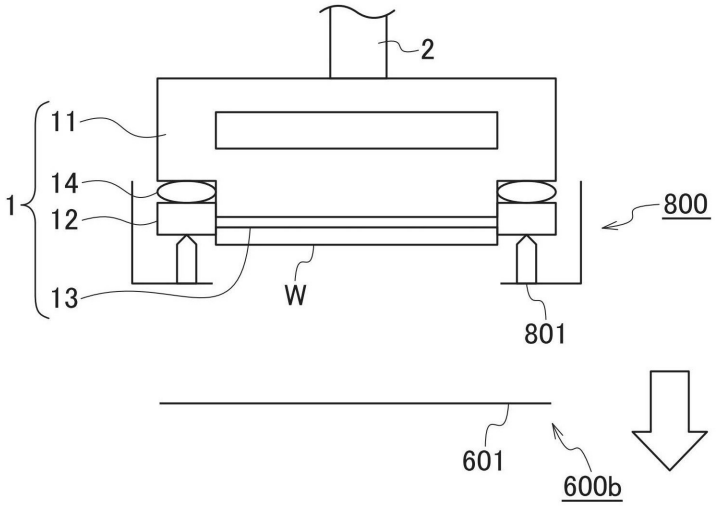

FIG.58

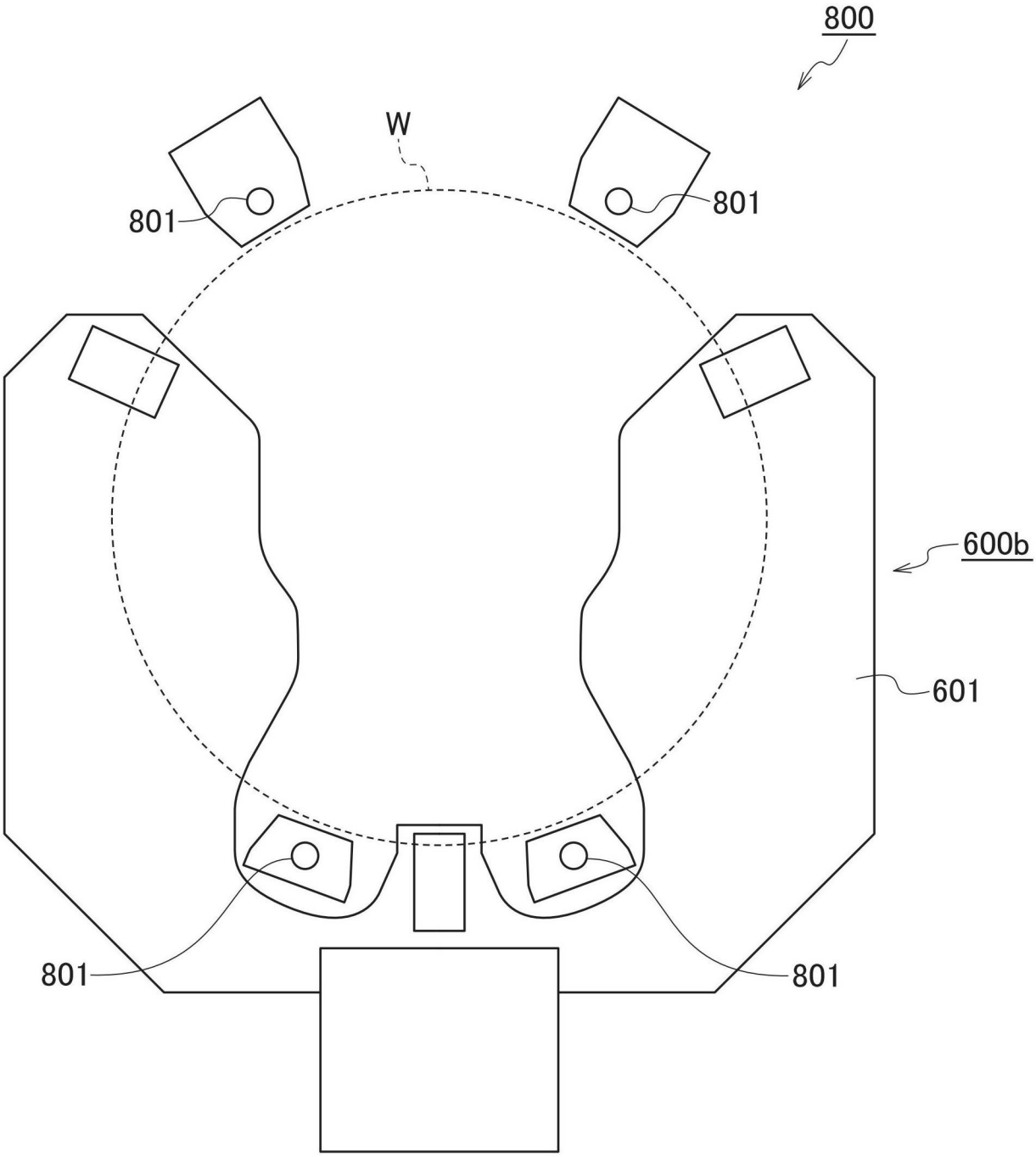

FIG.59A

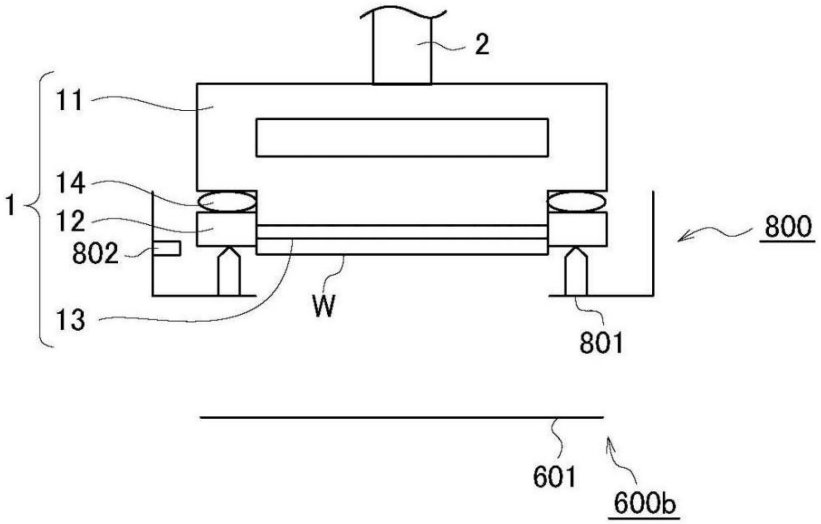

FIG.59B

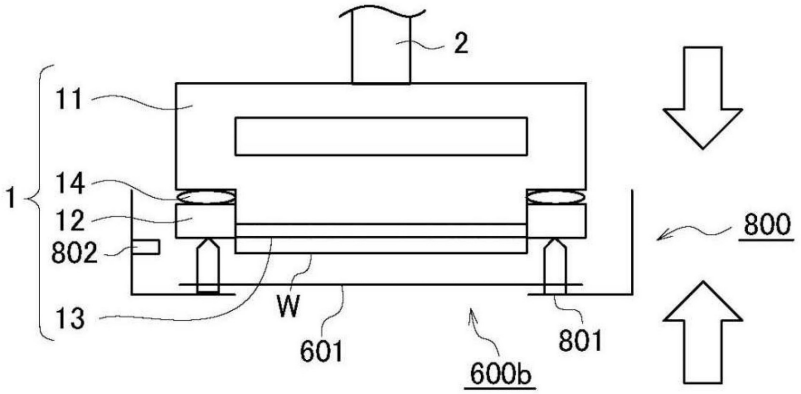

FIG.59C

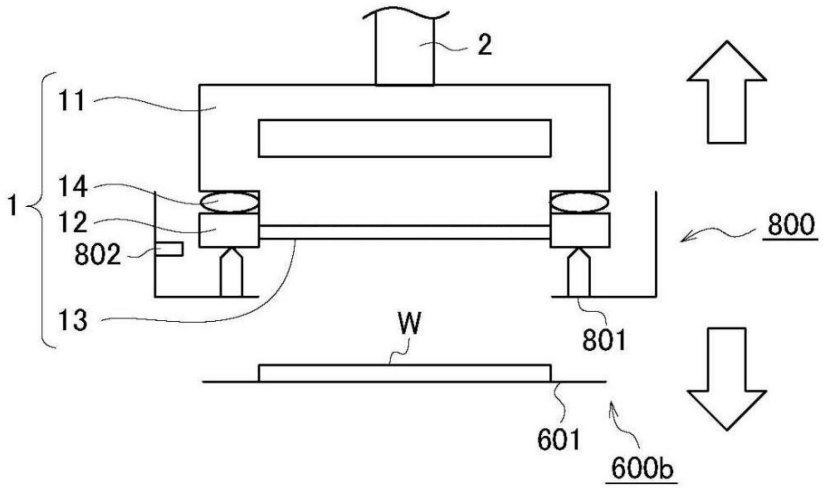

FIG.60

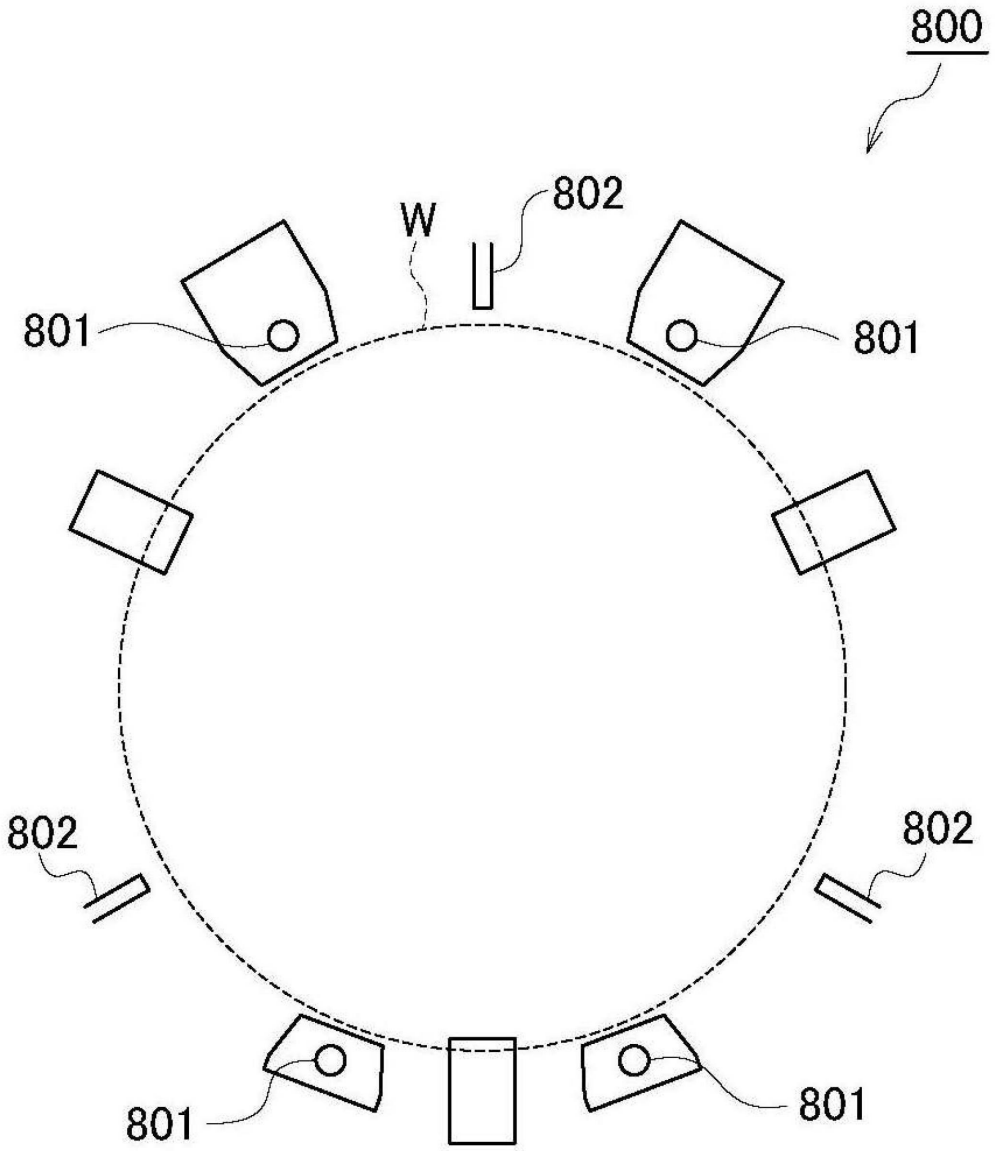

FIG.61

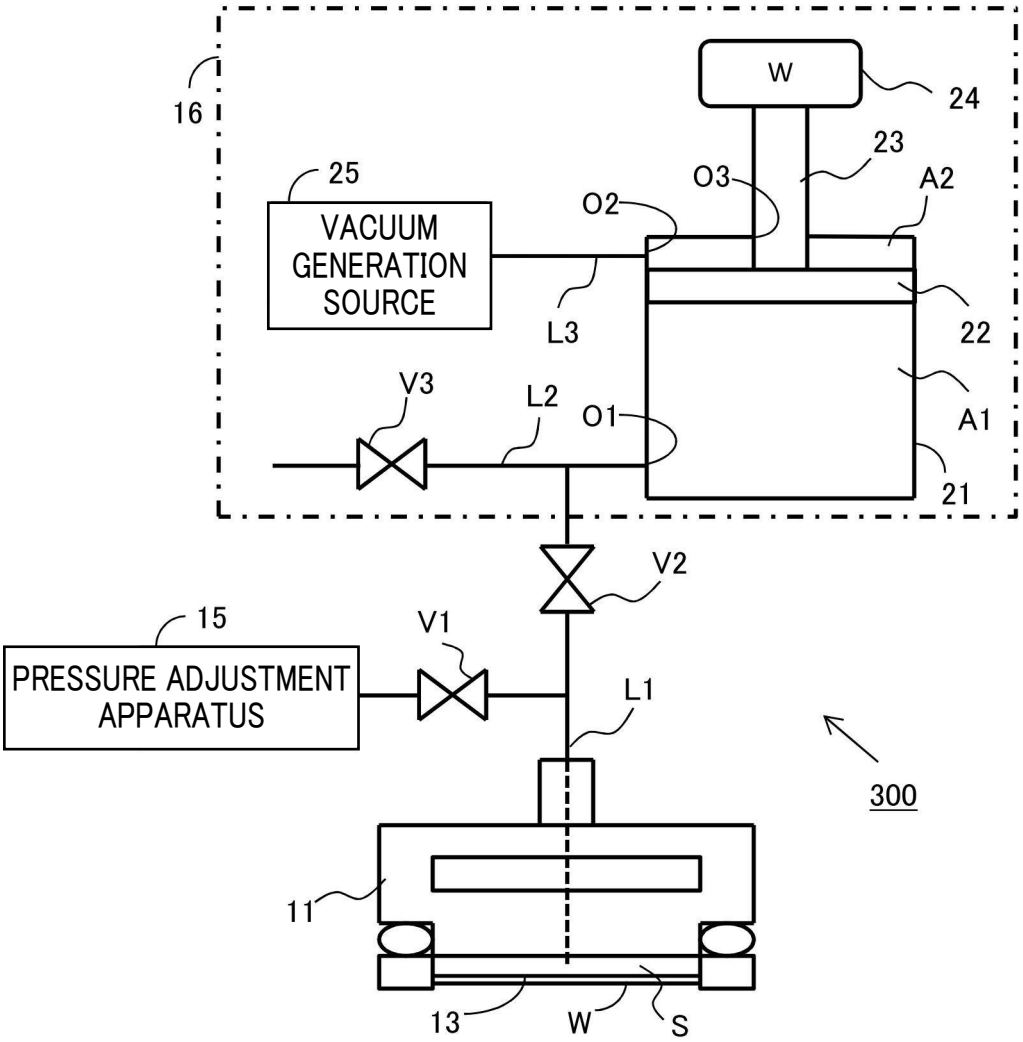
16
W
24
23
25
O3
A2
O2
VACUUM
GENERATION
SOURCE
L3
22
V3
L2
O1
A1
21
V2
15
V1
PRESSURE ADJUSTMENT
APPARATUS
L1
300
11
13
W
S

FIG.62

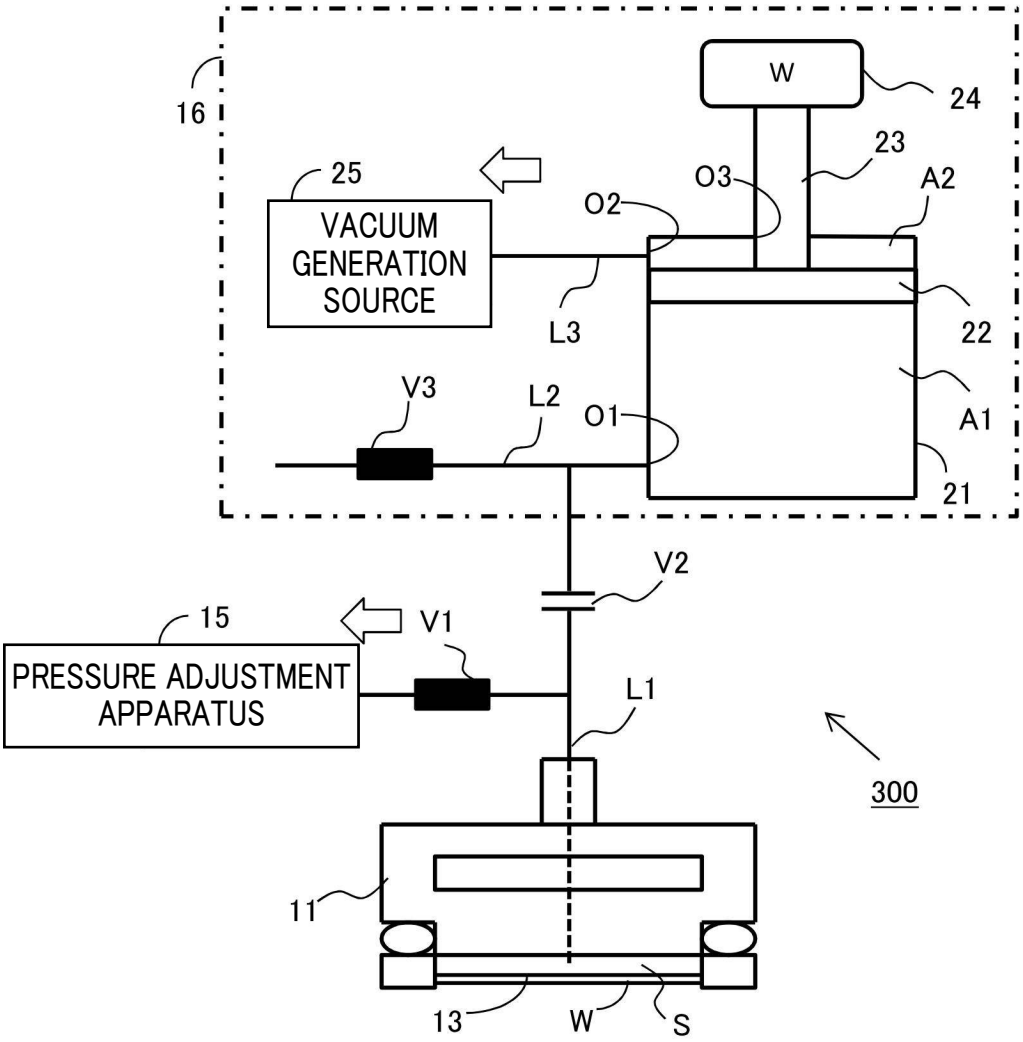
16
W
24
23
25
O3
A2
O2
VACUUM
GENERATION
SOURCE
L3
22
V3
L2
O1
A1
21
V2
15
V1
PRESSURE ADJUSTMENT
APPARATUS
L1
300
11
13
W
S

FIG.63

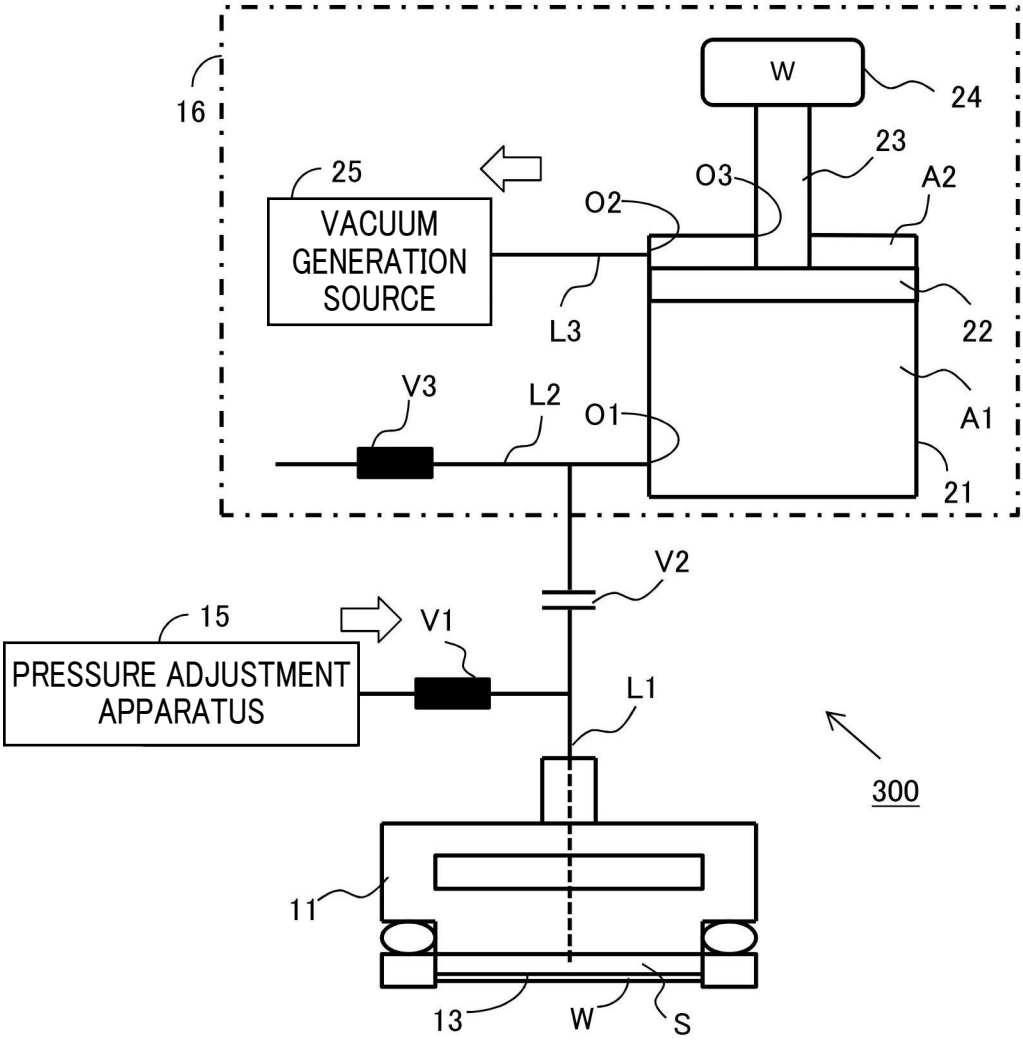
16
W
24
23
25
O3
A2
O2
VACUUM
GENERATION
SOURCE
L3
22
V3
L2
O1
A1
21
V2
15
V1
PRESSURE ADJUSTMENT
APPARATUS
L1
300
11
13
W
S

FIG.64

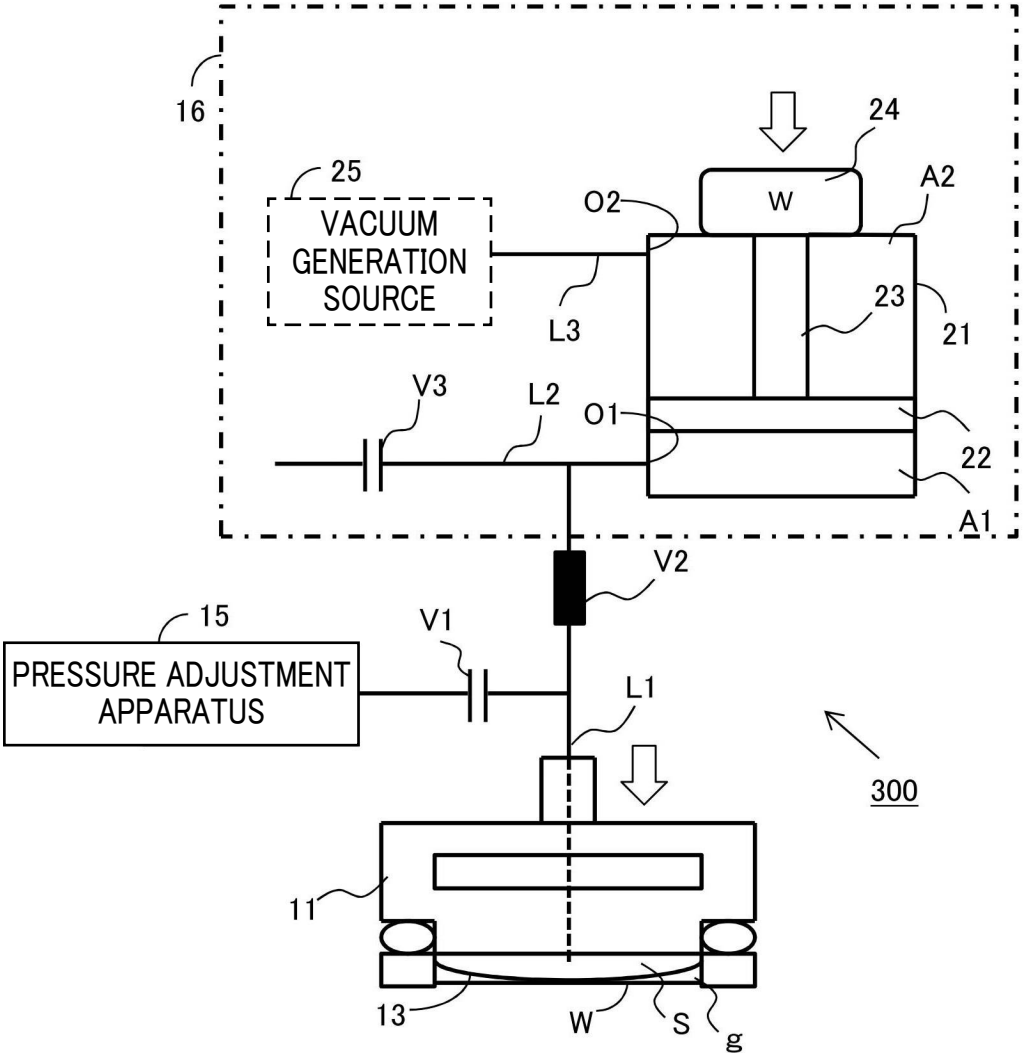
16
24
25
W
A2
O2
VACUUM
GENERATION
SOURCE
23
L3
21
V3
L2
O1
22
A1
V2
15
V1
PRESSURE ADJUSTMENT
APPARATUS
L1
300
11
13
W
S
g

FIG.65

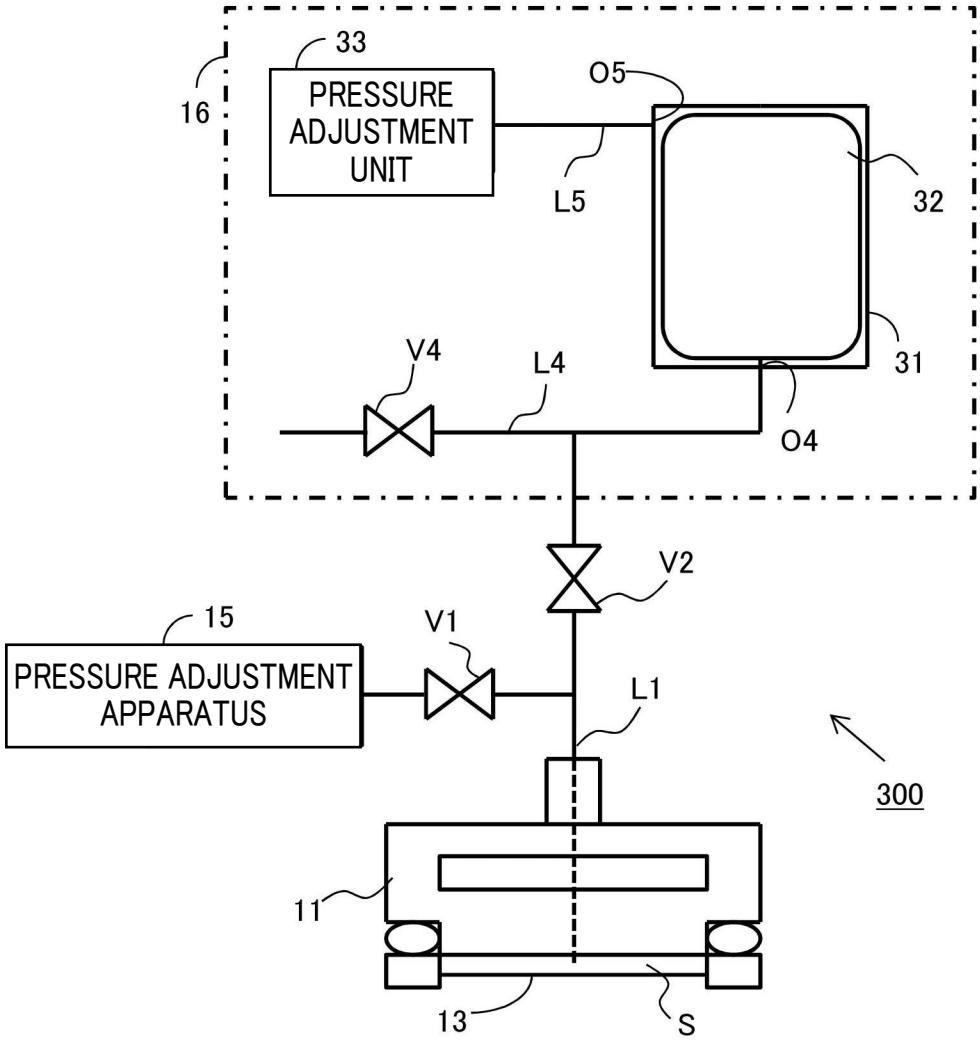
33
16
PRESSURE ADJUSTMENT UNIT
O5
L5
32
31
V4
L4
O4
V2
15
V1
PRESSURE ADJUSTMENT APPARATUS
L1
300
11
13
S

FIG.66

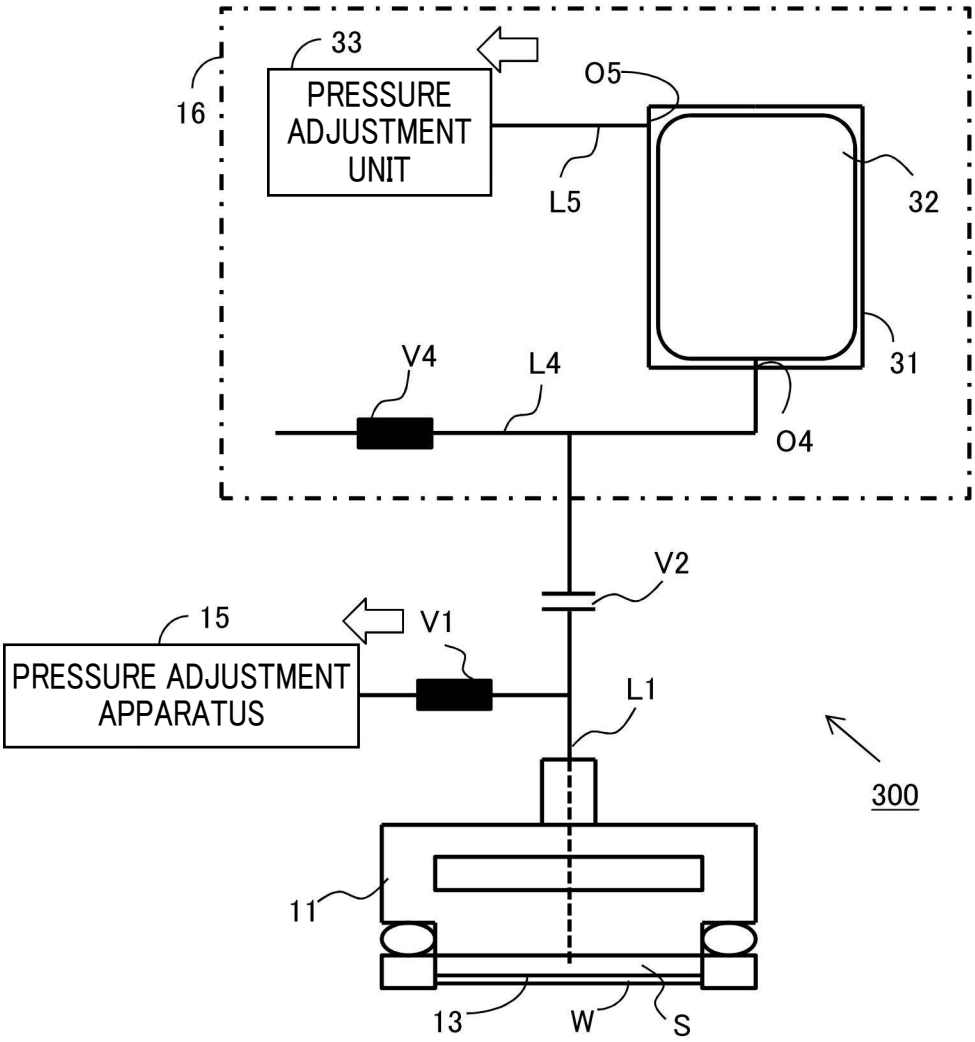
33
PRESSURE ADJUSTMENT UNIT
16
O5
L5
32
31
V4
L4
O4
V2
15
V1
PRESSURE ADJUSTMENT APPARATUS
L1
300
11
13
W
S

FIG.67

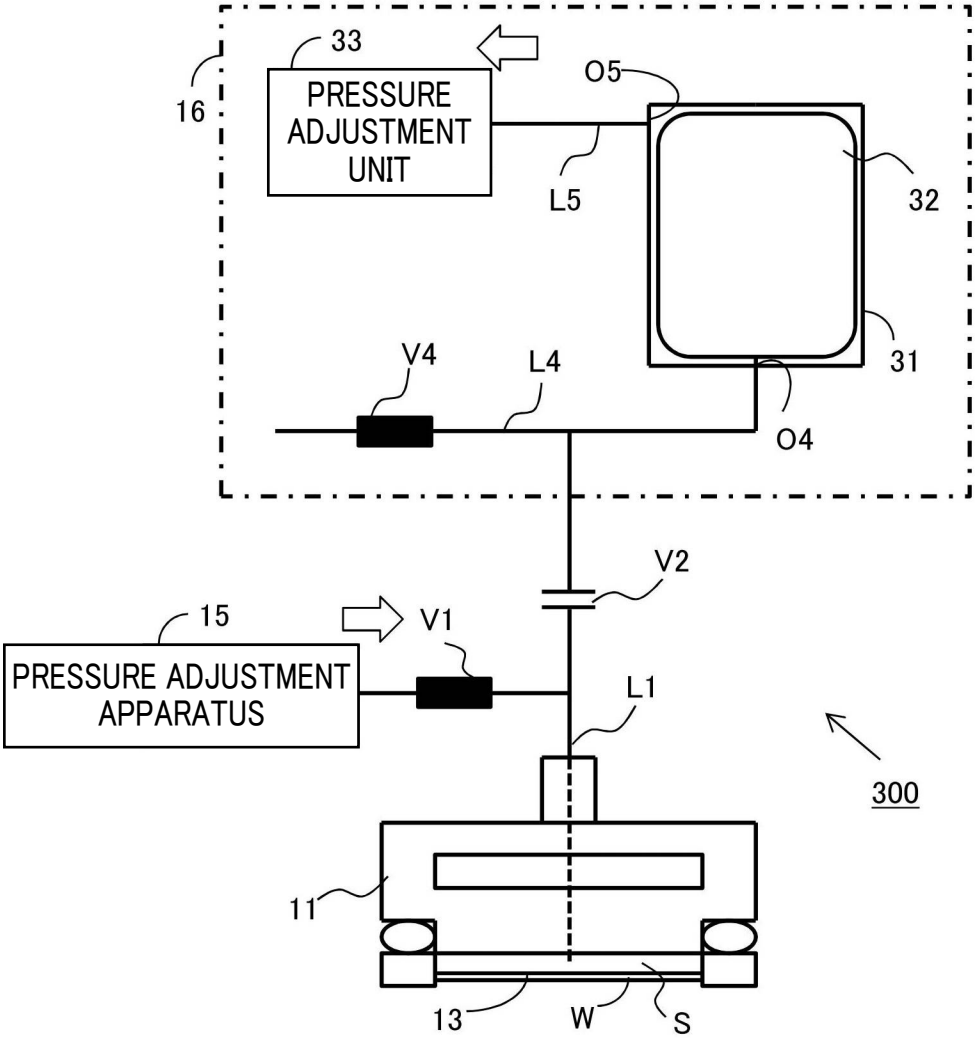
33
PRESSURE ADJUSTMENT UNIT
16
O5
L5
32
31
V4
L4
O4
V2
15
V1
PRESSURE ADJUSTMENT APPARATUS
L1
300
11
13
W
S

FIG.68

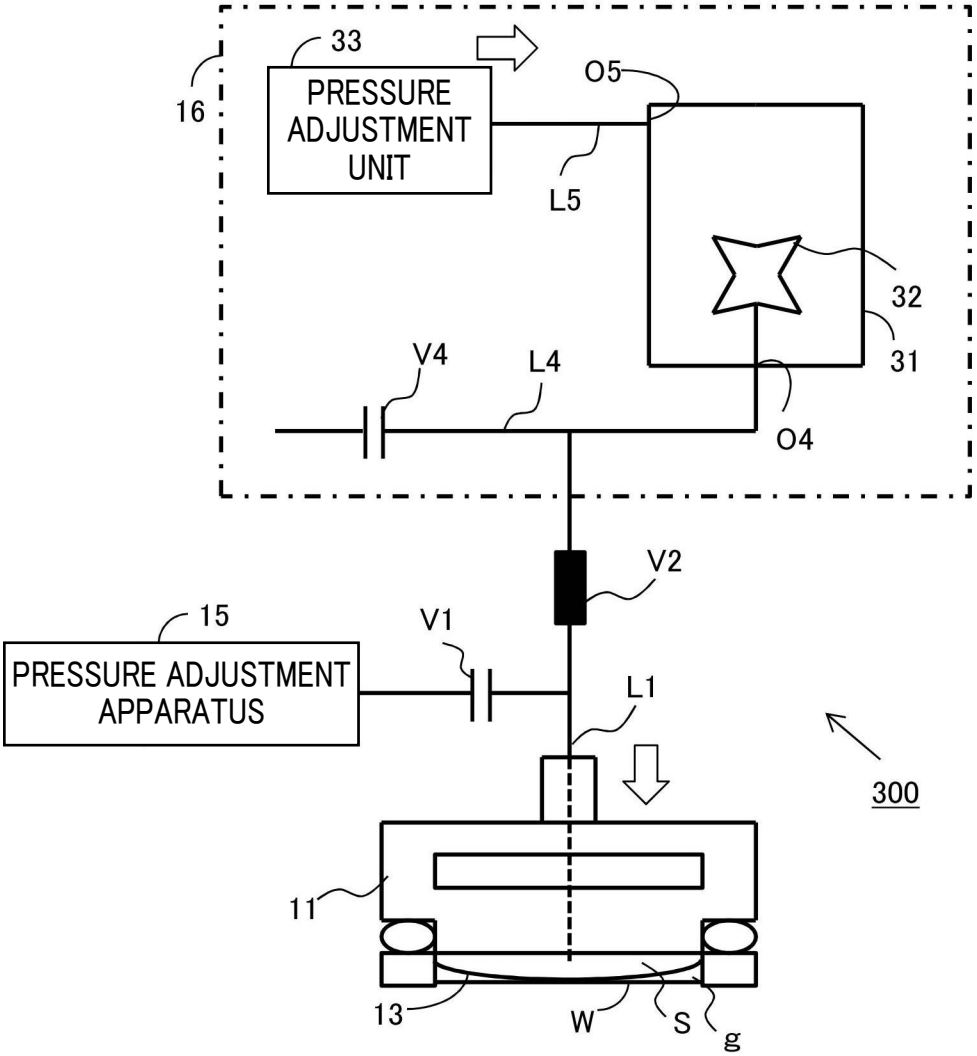
33
PRESSURE ADJUSTMENT UNIT
16
O5
L5
32
31
V4
L4
O4
V2
15
V1
PRESSURE ADJUSTMENT APPARATUS
L1
300
11
13
W
S
g