(12) INTERNATIONAL APPLICATION PUBLISHED UNDER THE PATENT COOPERATION TREATY (PCT)

(19) World Intellectual Property Organization
International Bureau

(43) International Publication Date
16 October 2014 (16.10.2014)

WIPO | PCT

(10) International Publication Number
WO 2014/168471 A1

(51) International Patent Classification:
B63B 35/44 (2006.01)

(21) International Application Number:
PCT/NL2014/050201

(22) International Filing Date:
2 April 2014 (02.04.2014)

(25) Filing Language: English

(26) Publication Language: English

(30) Priority Data:

2010627	12 April 2013 (12.04.2013)	NL
2012348	3 March 2014 (03.03.2014)	NL

(71) Applicant: **ITREC B.V.** [NL/NL]; 2, Admiraal Trompstraat, NL-3115 HH Schiedam (NL).

(72) Inventors: **ROODENBURG, Joop**; 7, St. Eustatiusstraat, NL-2612 HA Delft (NL). **WIJNING, Diederick Bernardus**; 32, Gustav Vasaborg, NL-3124 TH Schiedam (NL).

(74) Agent: **BROOKHUIS, H.J.A.**; P.O. Box 3241, NL-2280 GE Rijswijk (NL).

(81) Designated States *(unless otherwise indicated, for every kind of national protection available)*: AE, AG, AL, AM, AO, AT, AU, AZ, BA, BB, BG, BH, BN, BR, BW, BY, BZ, CA, CH, CL, CN, CO, CR, CU, CZ, DE, DK, DM, DO, DZ, EC, EE, EG, ES, FI, GB, GD, GE, GH, GM, GT, HN, HR, HU, ID, IL, IN, IR, IS, JP, KE, KG, KN, KP, KR, KZ, LA, LC, LK, LR, LS, LT, LU, LY, MA, MD, ME, MG, MK, MN, MW, MX, MY, MZ, NA, NG, NI, NO, NZ, OM, PA, PE, PG, PH, PL, PT, QA, RO, RS, RU, RW, SA, SC, SD, SE, SG, SK, SL, SM, ST, SV, SY, TH, TJ, TM, TN, TR, TT, TZ, UA, UG, US, UZ, VC, VN, ZA, ZM, ZW.

(84) Designated States *(unless otherwise indicated, for every kind of regional protection available)*: ARIPO (BW, GH, GM, KE, LR, LS, MW, MZ, NA, RW, SD, SL, SZ, TZ, UG, ZM, ZW), Eurasian (AM, AZ, BY, KG, KZ, RU, TJ, TM), European (AL, AT, BE, BG, CH, CY, CZ, DE, DK, EE, ES, FI, FR, GB, GR, HR, HU, IE, IS, IT, LT, LU, LV, MC, MK, MT, NL, NO, PL, PT, RO, RS, SE, SI, SK, SM, TR), OAPI (BF, BJ, CF, CG, CI, CM, GA, GN, GQ, GW, KM, ML, MR, NE, SN, TD, TG).

Published:

— *with international search report (Art. 21(3))*

(54) Title: SUBSEA WELLBORE OPERATIONS VESSEL

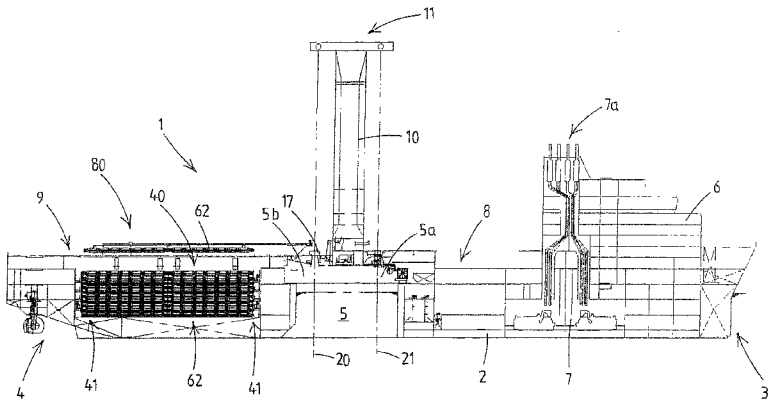

Fig.1

(57) Abstract: A vessel (1) adapted to perform subsea wellbore related operations involving a riser string between the subsea wellbore and the vessel, e.g. drilling and/or wellbore intervention. The vessel (1) has a hull (2) and a riser storage (40) adapted to store therein of multiple risers in horizontal orientation. The riser storage (40) is adapted to store therein, or has stored therein, multiple pre-assembled riser stands (60), e.g. at least 25 riser stands, each riser stand being assembled from multiple riser sections (60, 61) connected end-to-end, e.g. each riser stand (62) consisting of two riser sections (60, 61), each riser section comprising a riser pipe and optionally one or more satellite pipes on the outside of and along the riser pipe, each riser section (60, 61) comprising a connector or fitting arrangement at each end thereof, and each riser section (60, 61) comprising preferably one or more buoyancy members, wherein in a riser stand the connector fitting arrangement of one riser section is connected to a connector fitting arrangement of another riser section.

WO 2014/168471 A1