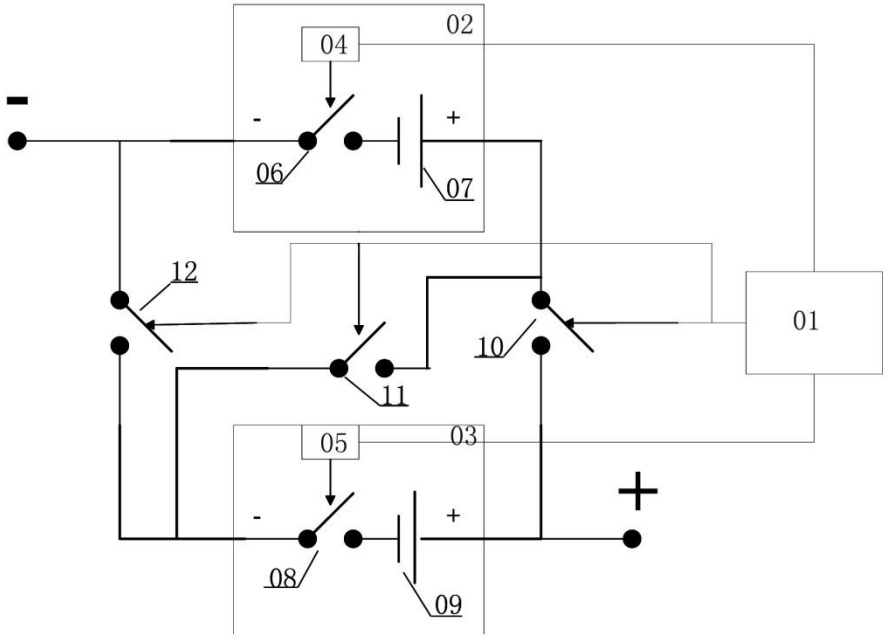

FIG. 1

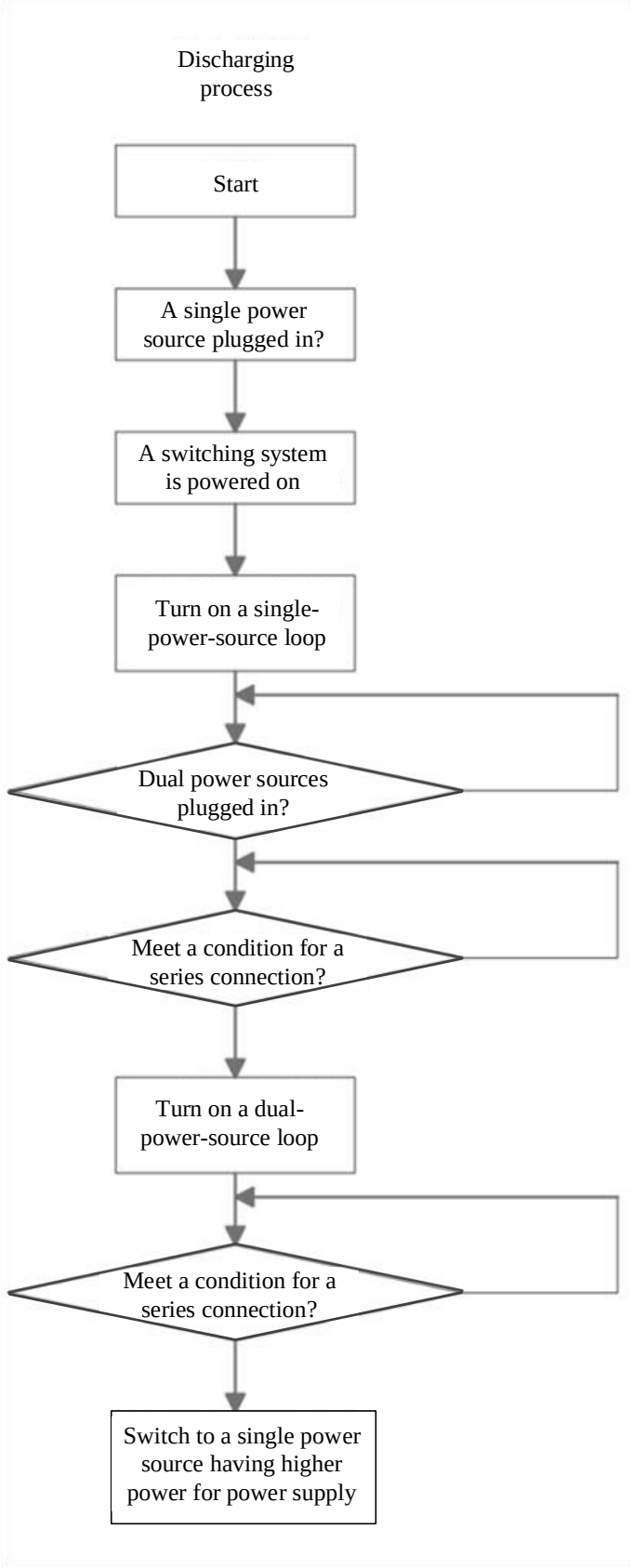
Discharging process
Start
A single power source plugged in?
A switching system is powered on
Turn on a single-power-source loop
Dual power sources plugged in?
Meet a condition for a series connection?
Turn on a dual-power-source loop
Meet a condition for a series connection?
Switch to a single power source having higher power for power supply

FIG. 2

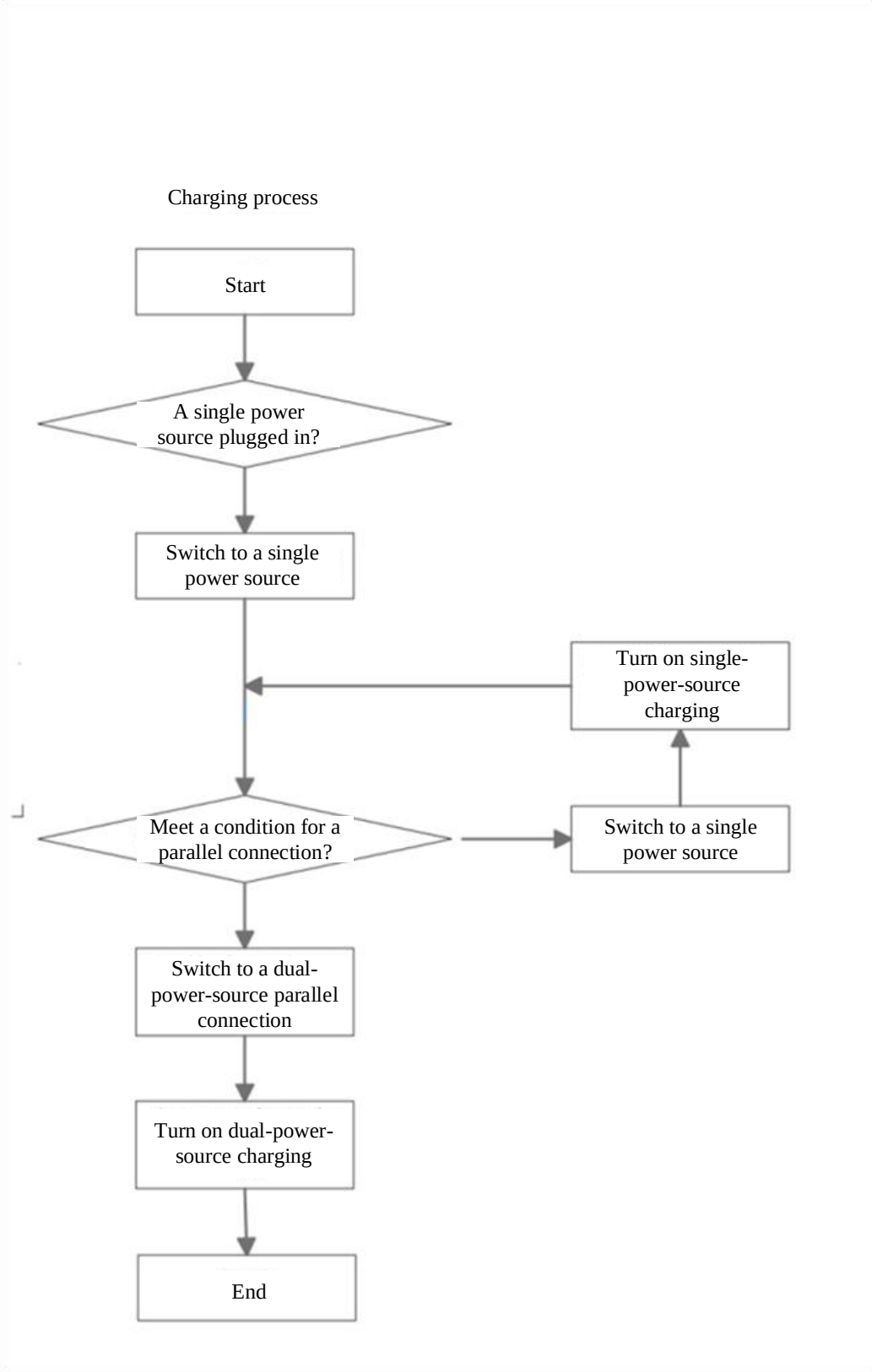
Charging process
Start
A single power source plugged in?
Switch to a single power source
Turn on single-power-source charging
Meet a condition for a parallel connection?
Switch to a single power source
Switch to a dual-power-source parallel connection
Turn on dual-power-source charging
End

FIG. 3