FIG. 1A

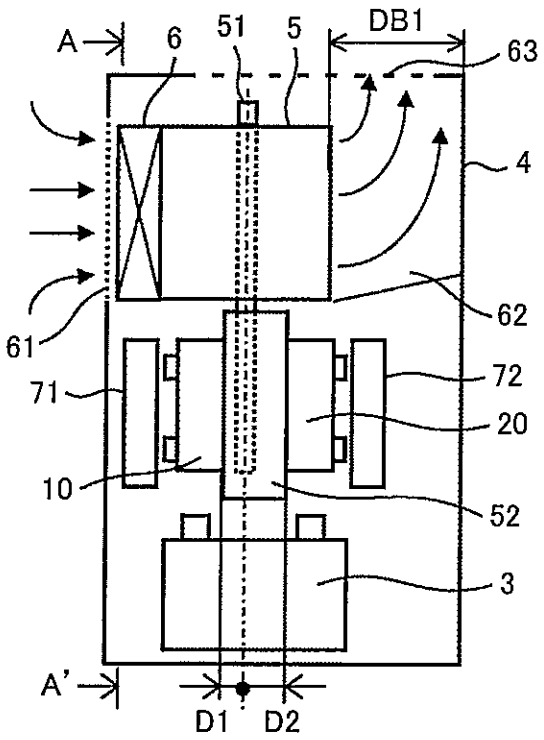

FIG. 1B

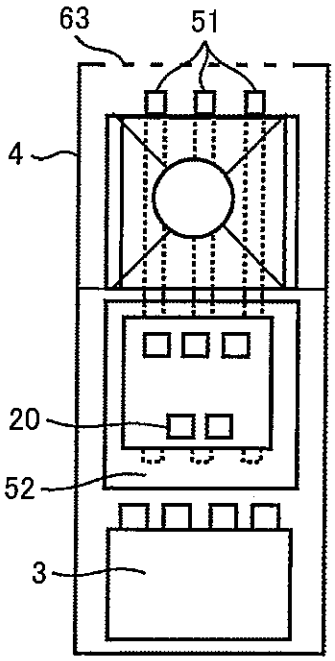

VIEW AS TAKEN ALONG LINE A-A'

FIG. 1C

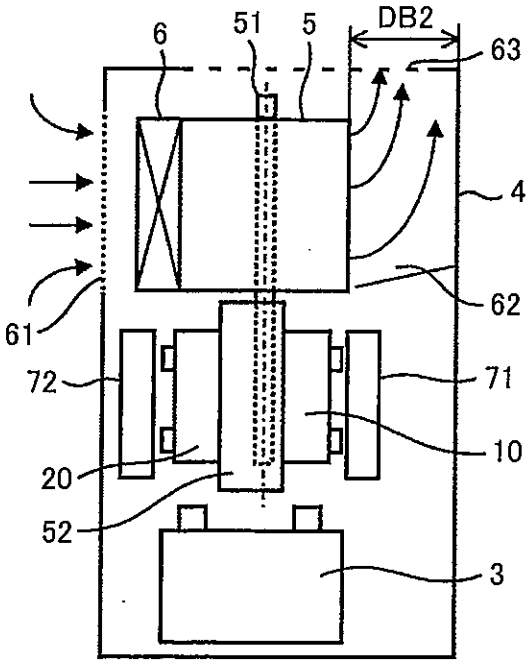

FIG. 2

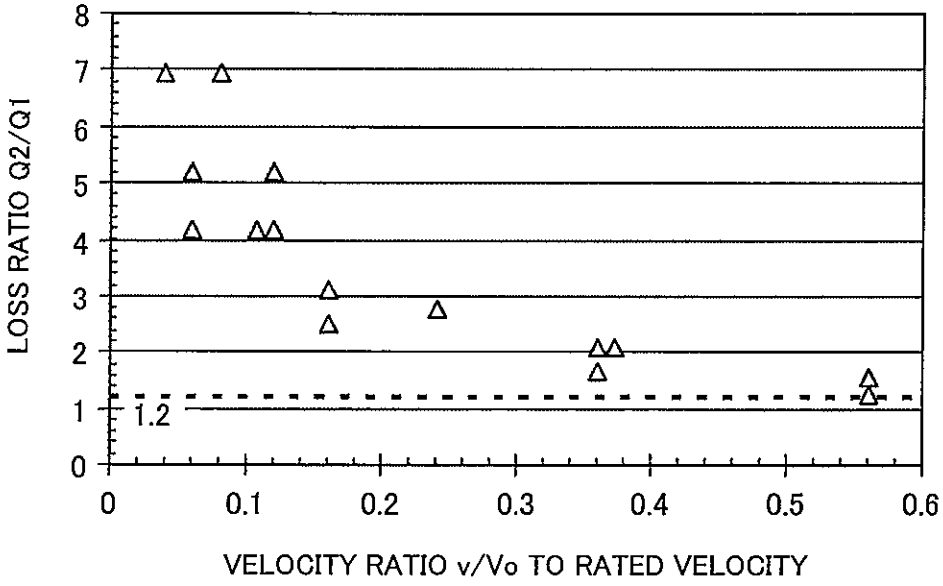
LOSS RATIO Q2/Q1
8
7
6
5
4
3
2
1
0
1.2
0
0.1
0.2
0.3
0.4
0.5
0.6
VELOCITY RATIO v/Vo TO RATED VELOCITY

FIG. 3

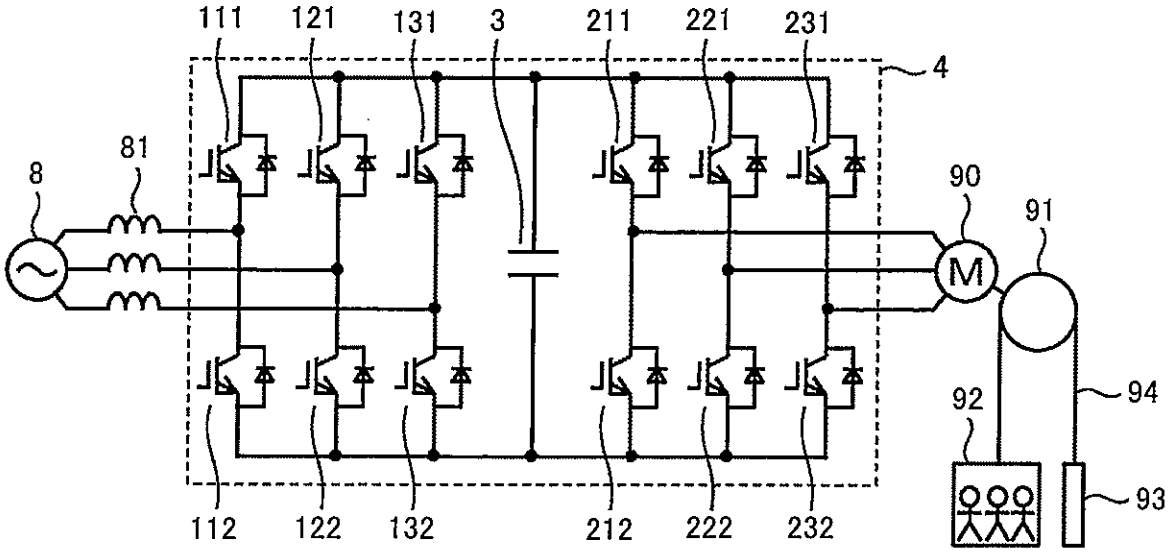
111
121
131
3
211
221
231
4
81
8
90
91
M
92
94
93
112
122
132
212
222
232

FIG. 4A

VELOCITY

FIG. 4B

CURRENT AMPLITUDE OF CONVERTER

FIG. 4C

CURRENT AMPLITUDE OF INVERTER

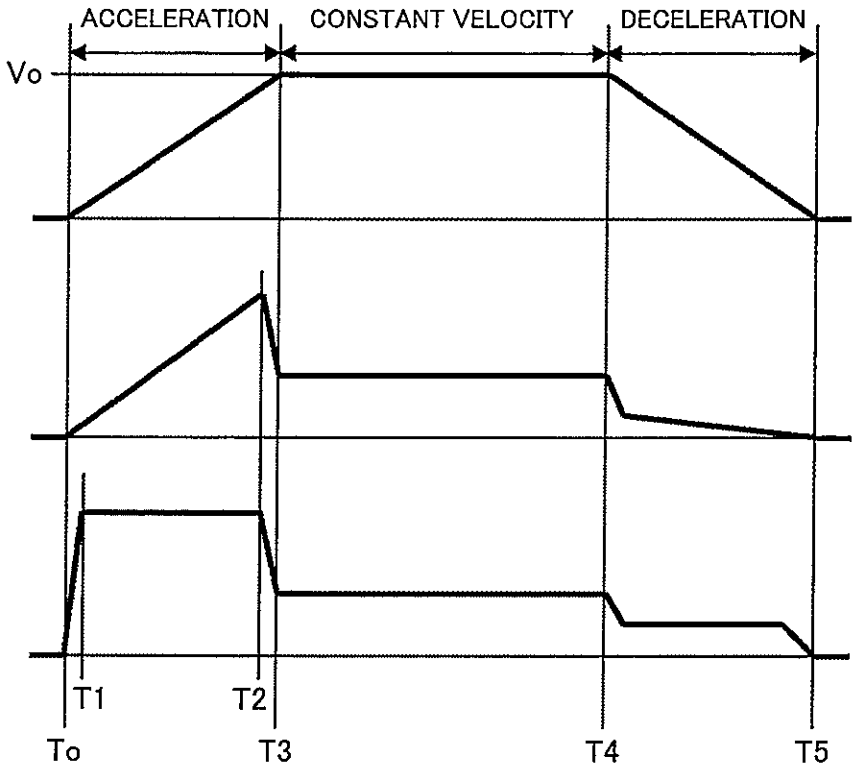

FIG. 5A

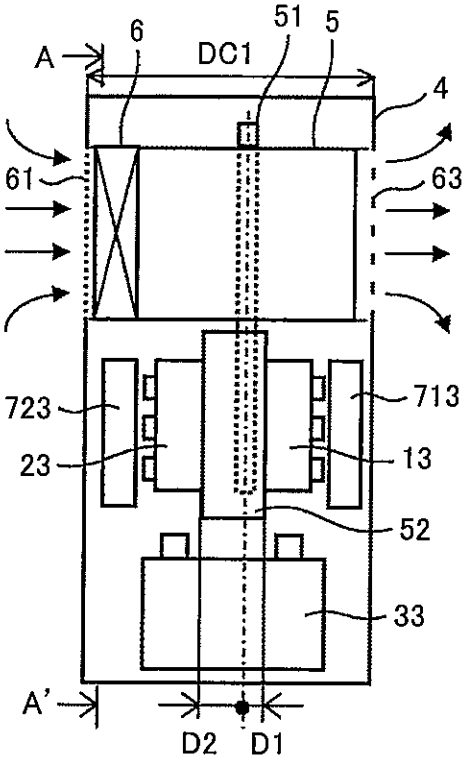

FIG. 5B

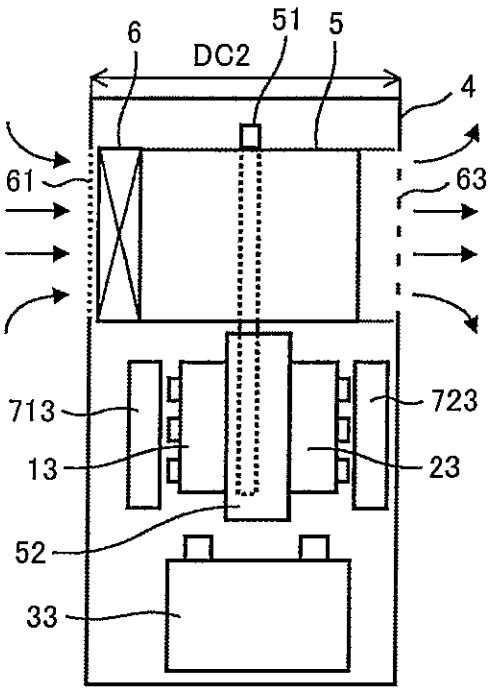

FIG. 5C

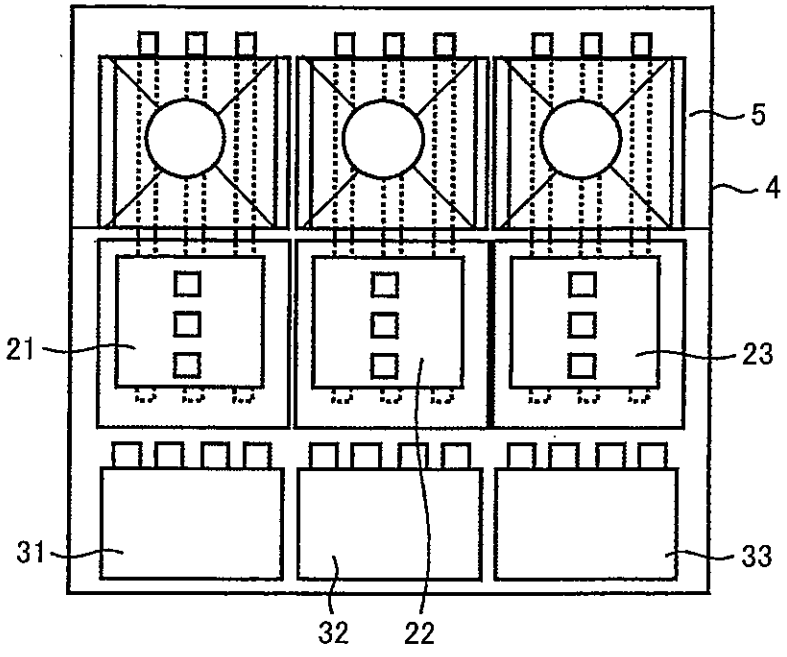

VIEW AS TAKEN ALONG LINE A-A'

FIG. 6A

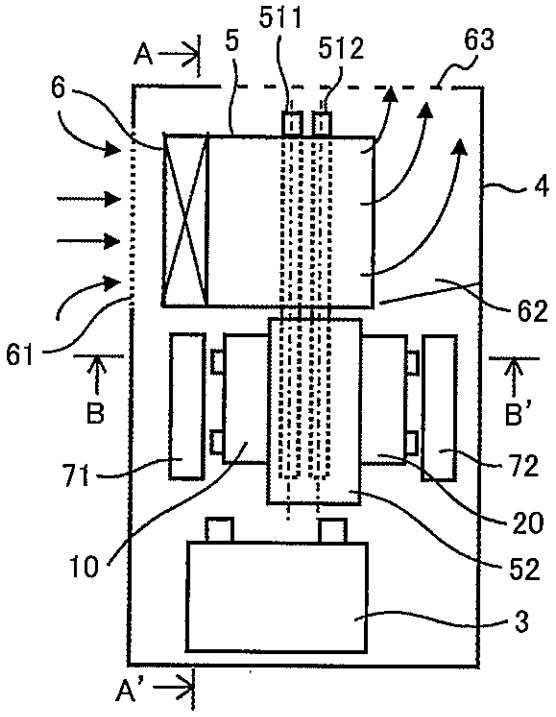

FIG. 6B

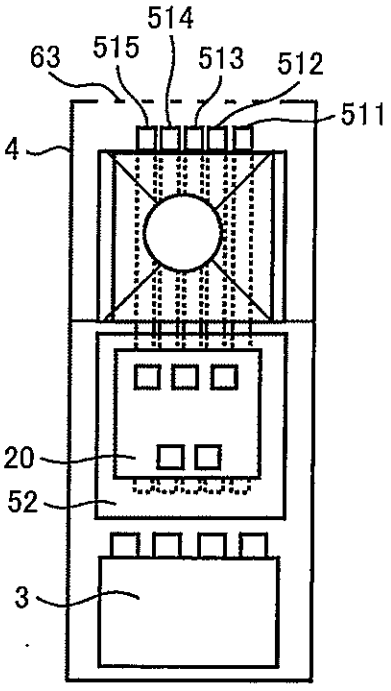

VIEW AS TAKEN ALONG LINE A-A'

FIG. 6C

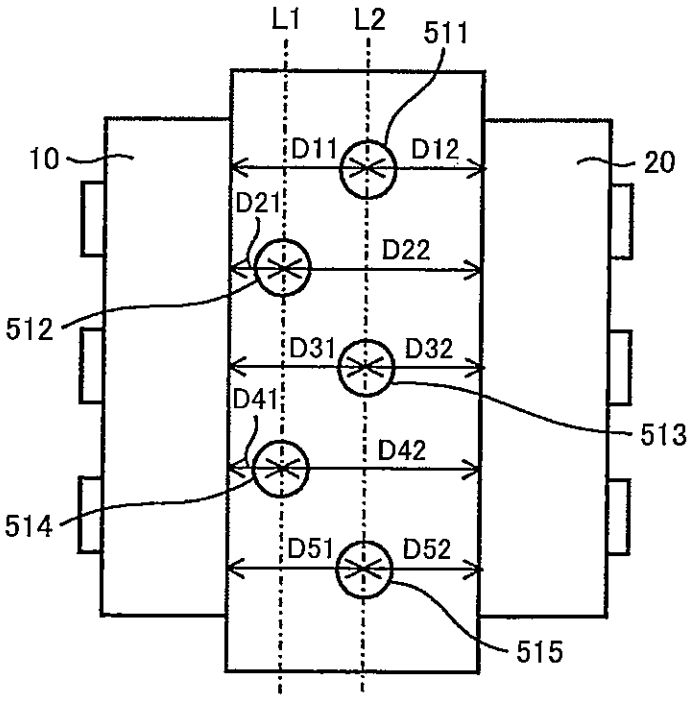

VIEW AS TAKEN ALONG LINE B-B'

FIG. 7A

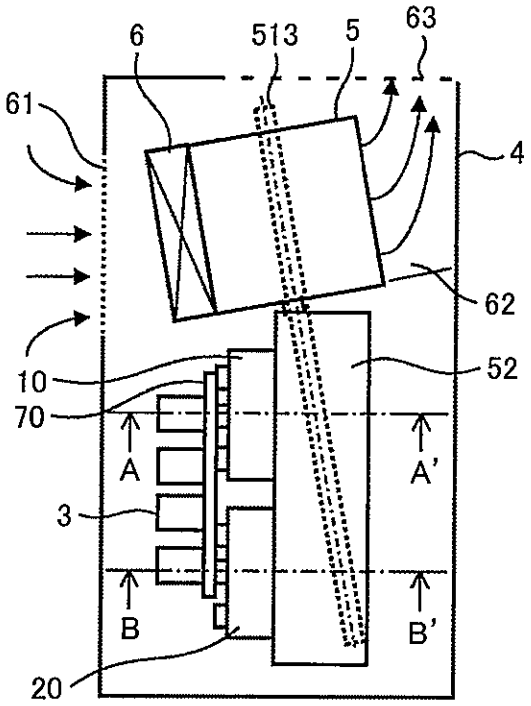

FIG. 7B

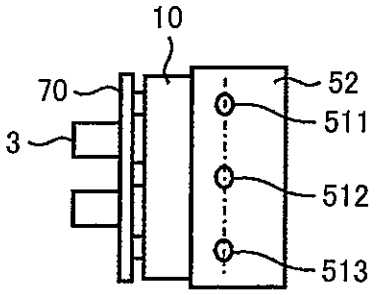

CROSS SECTIONAL
VIEW AS TAKEN ALONG LINE A-A'

FIG. 7C

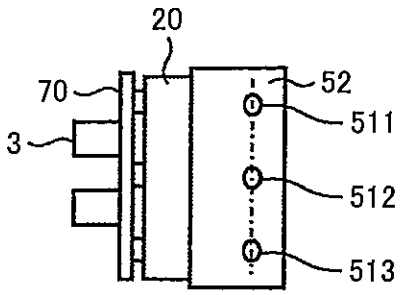

CROSS SECTIONAL
VIEW AS TAKEN ALONG LINE B-B'

FIG. 8A

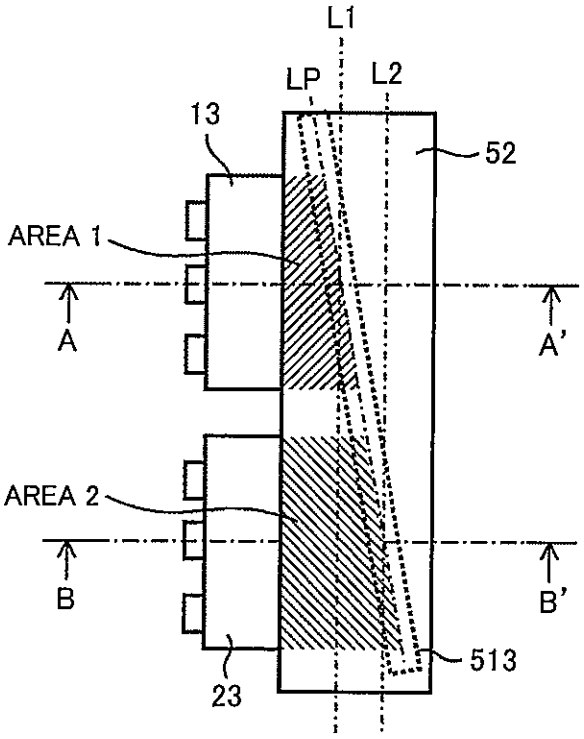

FIG. 8B

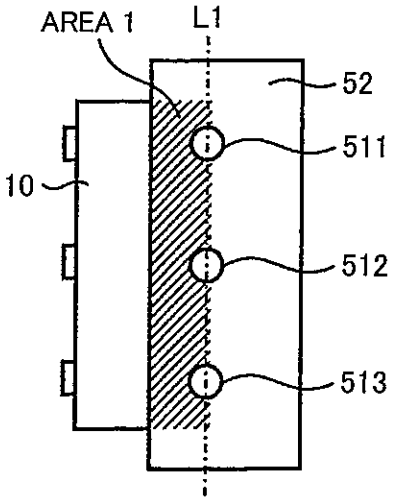

CROSS SECTIONAL
VIEW AS TAKEN ALONG LINE A-A'

FIG. 8C

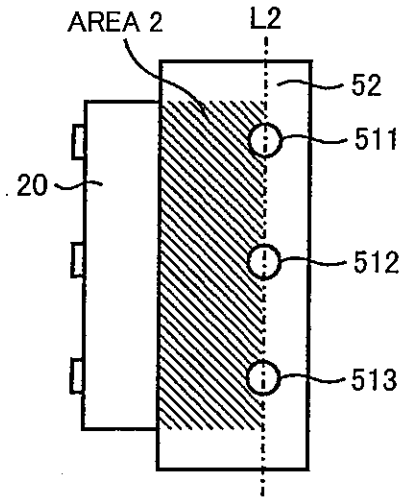

CROSS SECTIONAL
VIEW AS TAKEN ALONG LINE B-B'

FIG. 9A

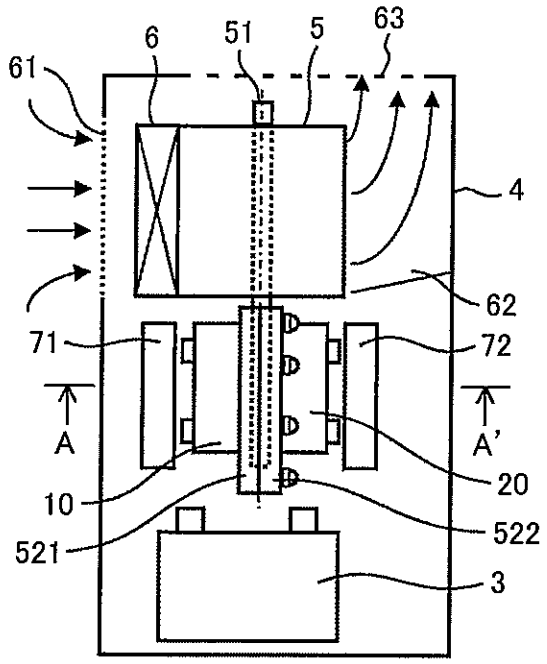

FIG. 9B

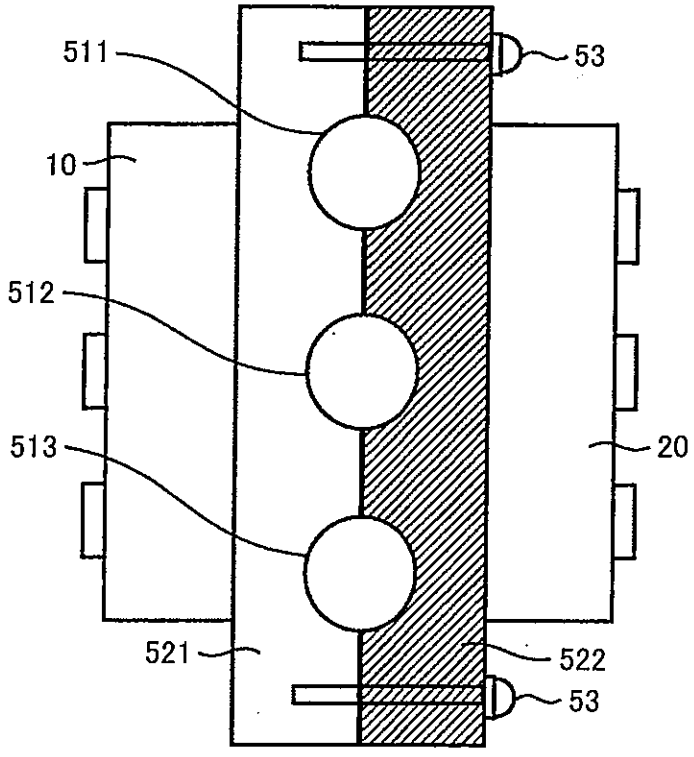

VIEW AS TAKEN ALONG LINE A-A'