FIG. 1

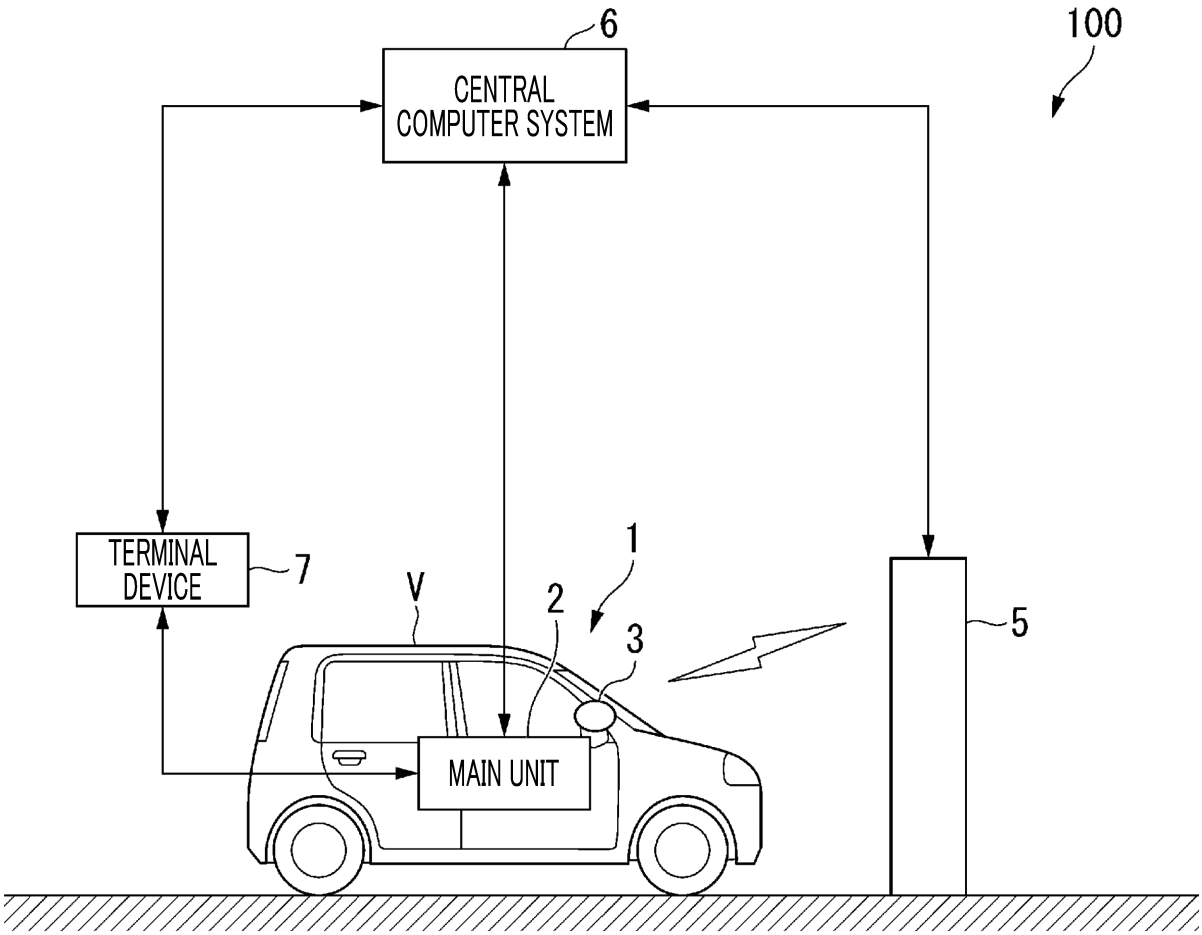
6
100
CENTRAL
COMPUTER SYSTEM
TERMINAL
DEVICE
7
V
2
1
3
5
MAIN UNIT

FIG. 2

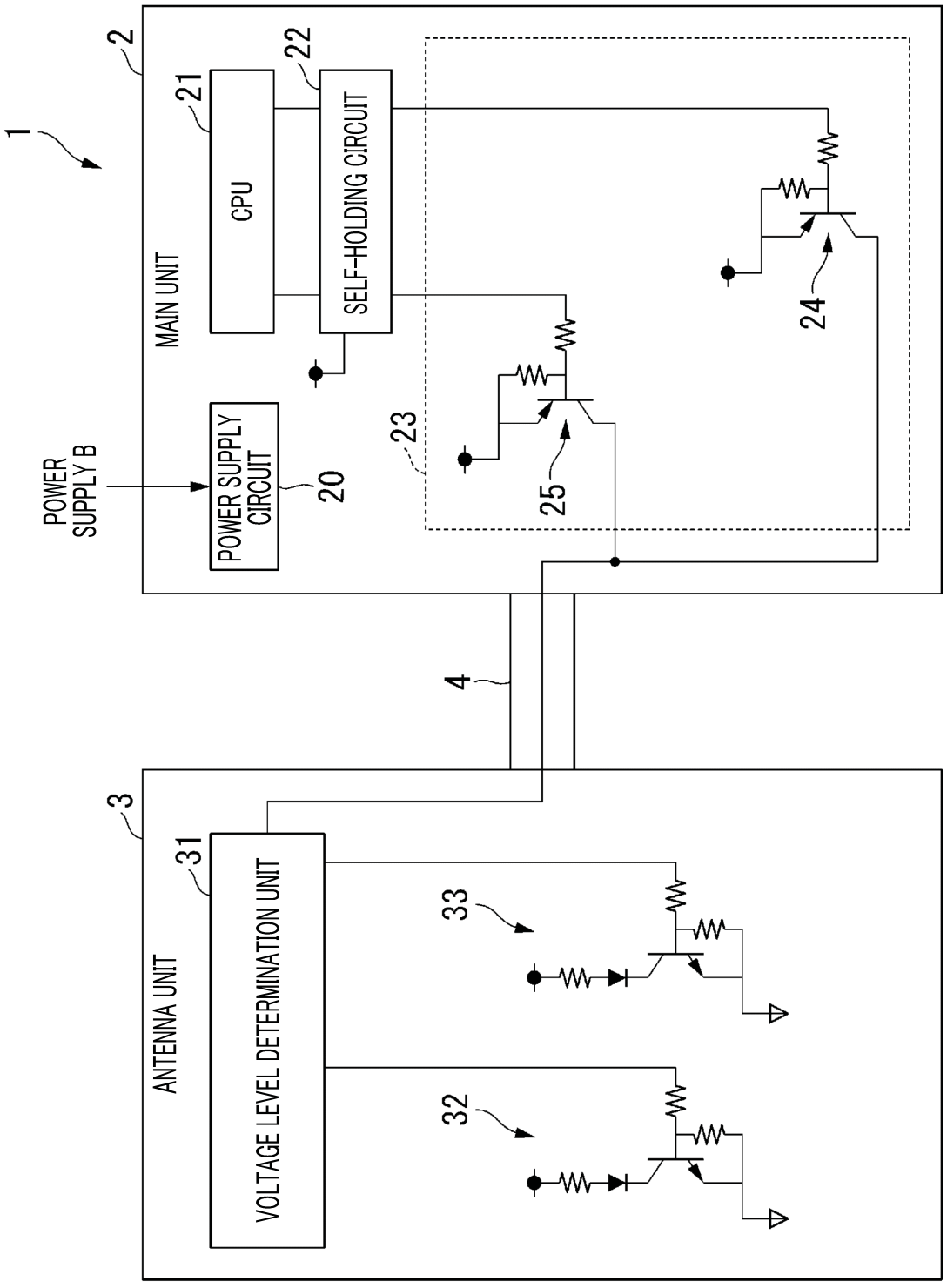
1
2
MAIN UNIT
21
CPU
22
SELF-HOLDING CIRCUIT
POWER SUPPLY B
POWER SUPPLY CIRCUIT
20
23
24
25
4
3
ANTENNA UNIT
31
VOLTAGE LEVEL DETERMINATION UNIT
33
32

FIG. 3

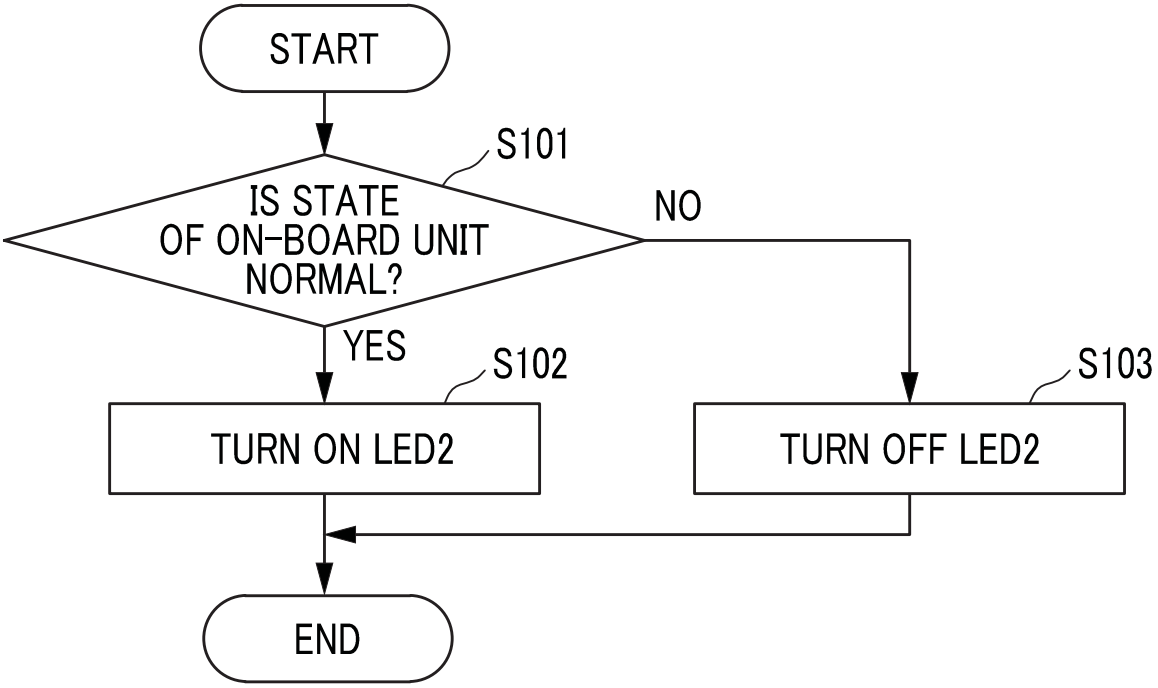

FIG. 4

		PARKING STATUS	ON-BOARD UNIT STATUS
ENGINE	STATE	LED1	LED2
ON	NORMAL	TURNED OFF	TURNED ON
	ABNORMAL	TURNED OFF	TURNED OFF
OFF	WITHIN LIMIT TIME	TURNED ON	TURNED OFF
	OUTSIDE LIMIT TIME	TURNED OFF	TURNED OFF

FIG. 5

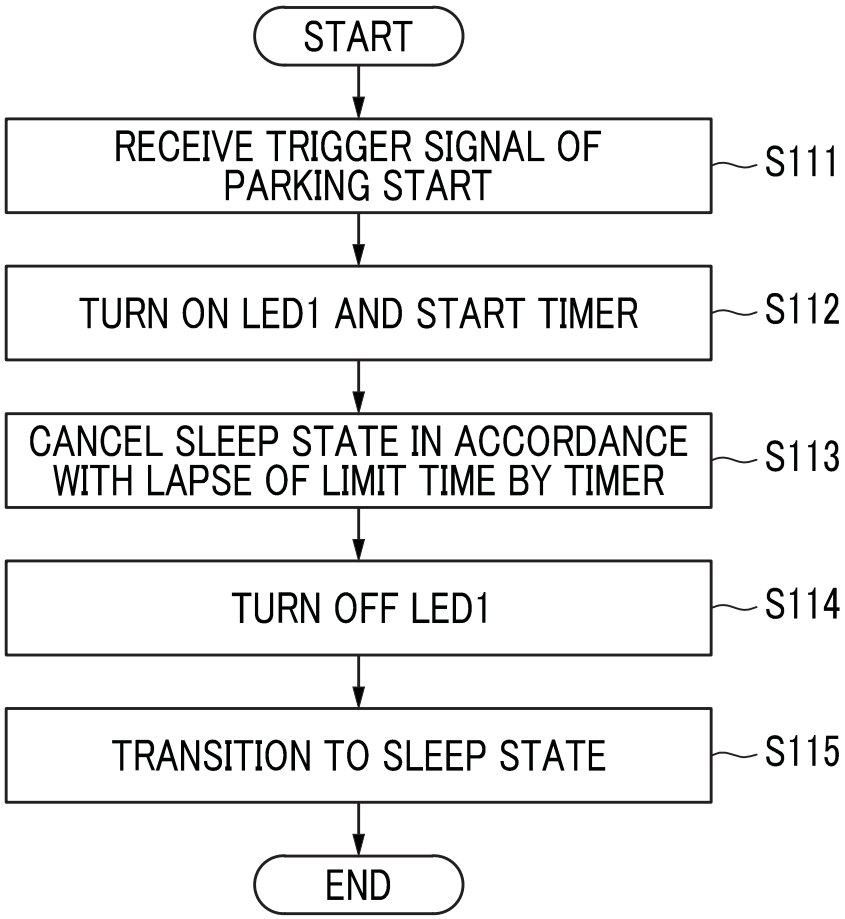
START
RECEIVE TRIGGER SIGNAL OF PARKING START
S111
TURN ON LED1 AND START TIMER
S112
CANCEL SLEEP STATE IN ACCORDANCE WITH LAPSE OF LIMIT TIME BY TIMER
S113
TURN OFF LED1
S114
TRANSITION TO SLEEP STATE
S115
END

FIG. 6

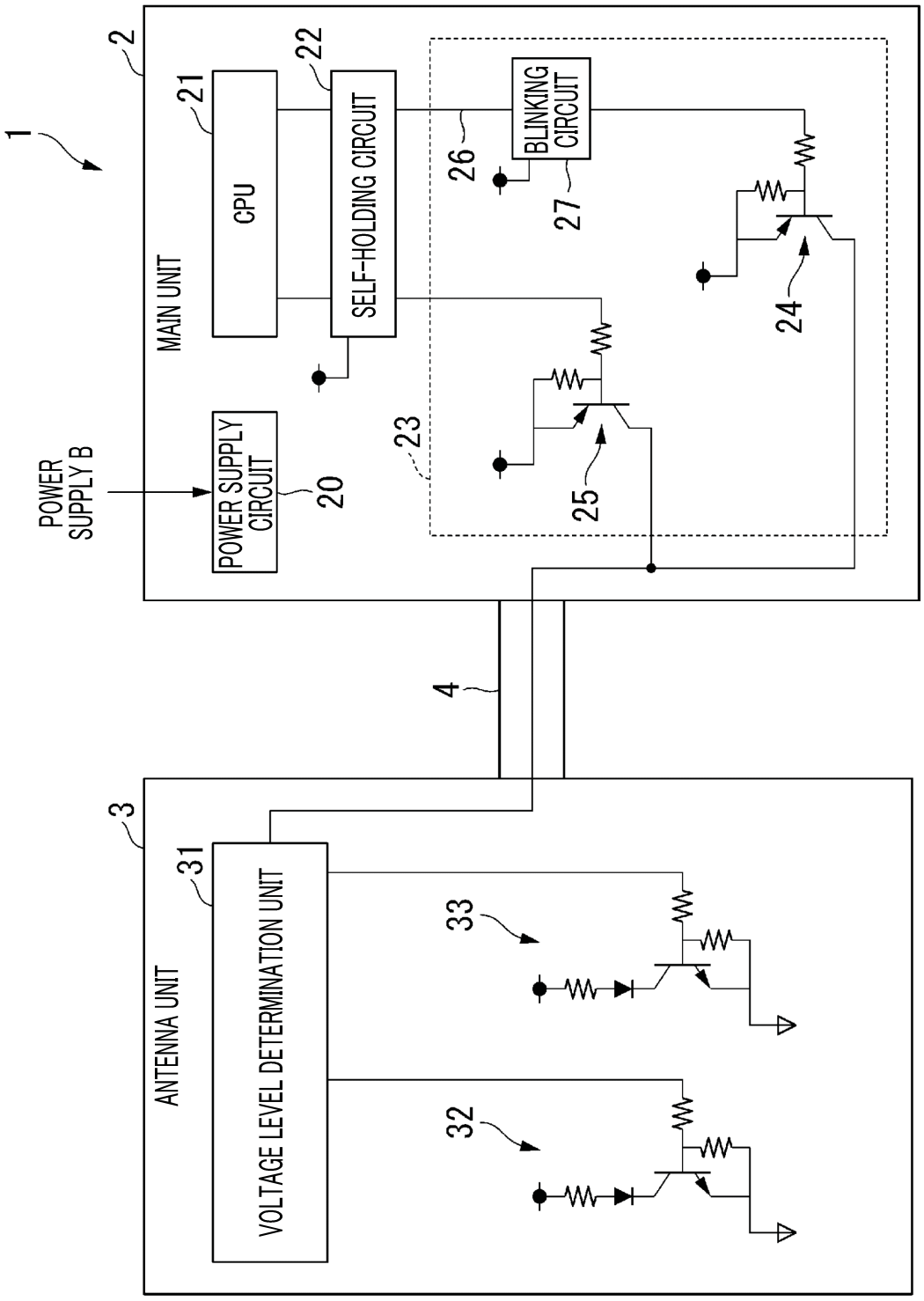
1
2
MAIN UNIT
21
CPU
22
SELF-HOLDING CIRCUIT
BLINKING CIRCUIT
26
27
24
POWER SUPPLY B
POWER SUPPLY CIRCUIT
20
23
25
4
3
ANTENNA UNIT
31
VOLTAGE LEVEL DETERMINATION UNIT
33
32

FIG. 7

		PARKING STATUS	ON-BOARD UNIT STATUS
ENGINE	STATE	LED1	LED2
ON	NORMAL	TURNED OFF	TURNED ON
	ABNORMAL	TURNED OFF	TURNED OFF
OFF	WITHIN LIMIT TIME	BLINKED	TURNED OFF
	OUTSIDE LIMIT TIME	TURNED OFF	TURNED OFF

FIG. 8

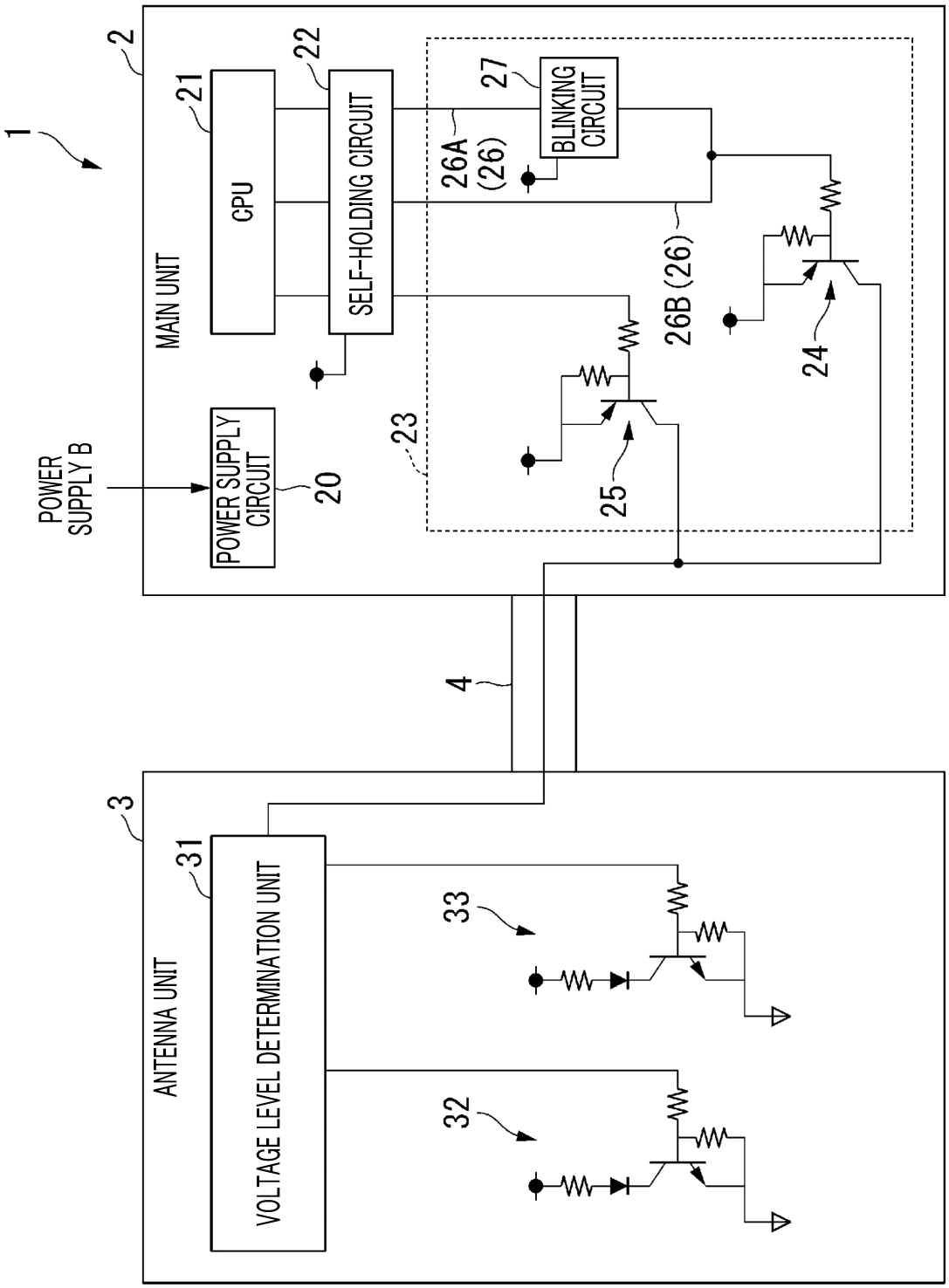
1
2
MAIN UNIT
21
CPU
22
SELF-HOLDING CIRCUIT
27
BLINKING CIRCUIT
26A (26)
26B (26)
23
24
25
POWER SUPPLY B
POWER SUPPLY CIRCUIT
20
4
3
ANTENNA UNIT
31
VOLTAGE LEVEL DETERMINATION UNIT
33
32

FIG. 9

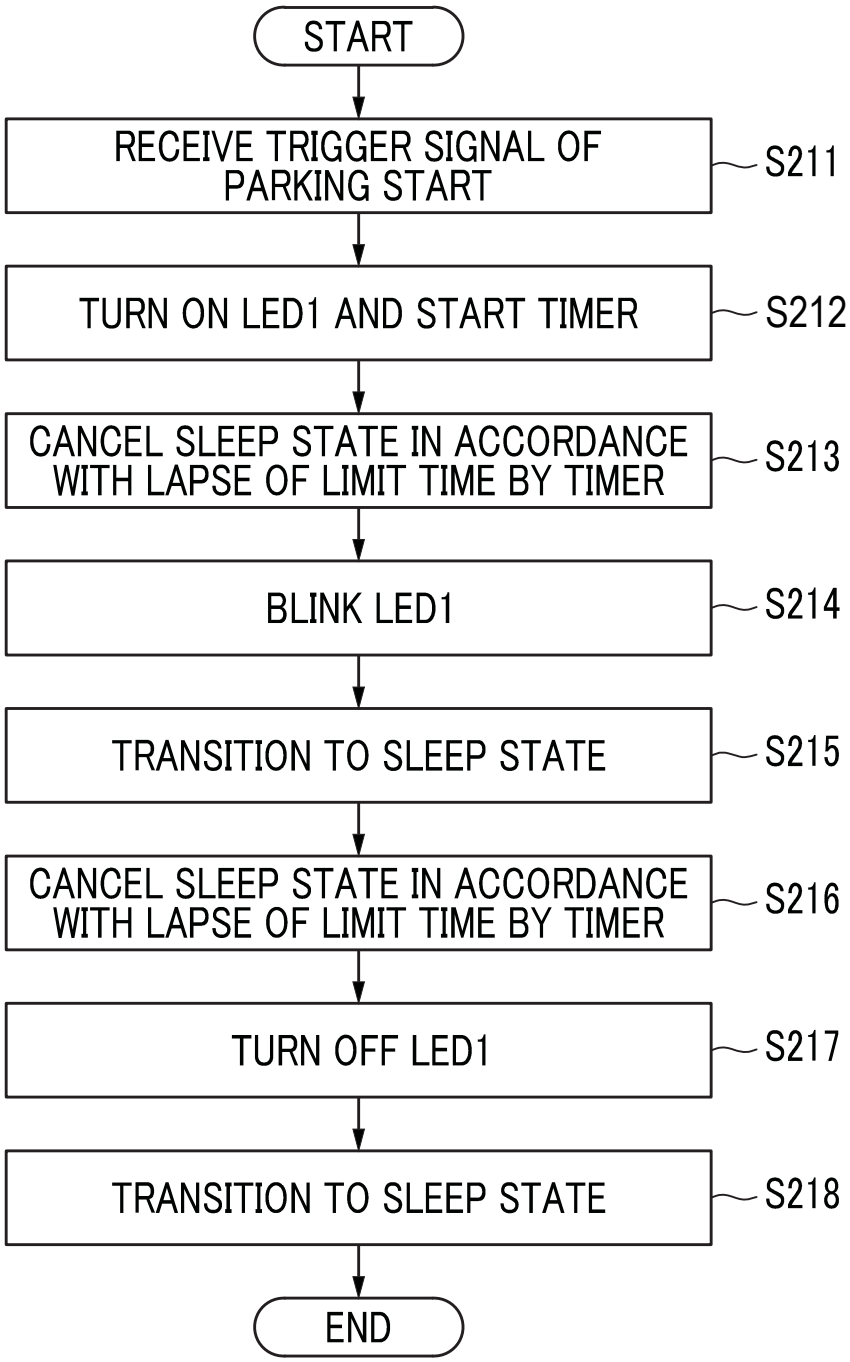
START
RECEIVE TRIGGER SIGNAL OF PARKING START
S211
TURN ON LED1 AND START TIMER
S212
CANCEL SLEEP STATE IN ACCORDANCE WITH LAPSE OF LIMIT TIME BY TIMER
S213
BLINK LED1
S214
TRANSITION TO SLEEP STATE
S215
CANCEL SLEEP STATE IN ACCORDANCE WITH LAPSE OF LIMIT TIME BY TIMER
S216
TURN OFF LED1
S217
TRANSITION TO SLEEP STATE
S218
END

FIG. 10

		PARKING STATUS	ON-BOARD UNIT STATUS
ENGINE	STATE	LED1	LED2
ON	NORMAL	TURNED OFF	TURNED ON
	ABNORMAL	TURNED OFF	TURNED OFF
OFF	WITHIN LIMIT TIME	TURNED ON	TURNED OFF
	WITHIN LIMIT TIME (REMAINING TIME IS EQUAL TO OR SHORTER THAN n MINUTES)	BLINKED	TURNED OFF
	OUTSIDE LIMIT TIME	TURNED OFF	TURNED OFF

FIG. 11

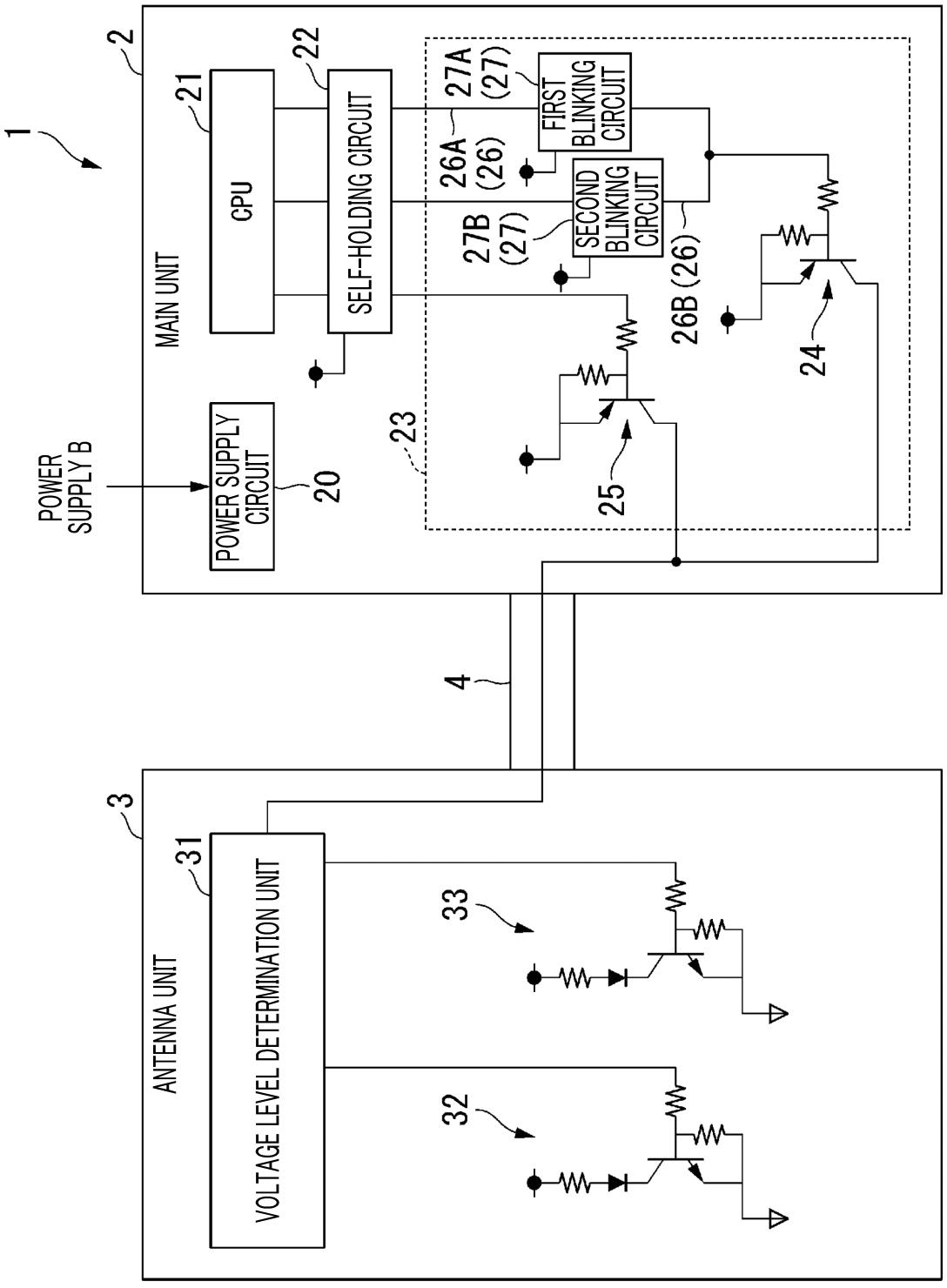
1
2
MAIN UNIT
21
CPU
22
SELF-HOLDING CIRCUIT
27A (27)
FIRST BLINKING CIRCUIT
26A (26)
27B (27)
SECOND BLINKING CIRCUIT
26B (26)
24
25
23
POWER SUPPLY B
POWER SUPPLY CIRCUIT
20
4
3
ANTENNA UNIT
31
VOLTAGE LEVEL DETERMINATION UNIT
33
32

FIG. 12

		PARKING STATUS	ON-BOARD UNIT STATUS
ENGINE	STATE	LED1	LED2
ON	NORMAL	TURNED OFF	TURNED ON
	ABNORMAL	TURNED OFF	TURNED OFF
OFF	WITHIN LIMIT TIME	BLINKED (PITCH 1)	TURNED OFF
	WITHIN LIMIT TIME (REMAINING TIME IS EQUAL TO OR SHORTER THAN n MINUTES)	BLINKED (PITCH 2)	TURNED OFF
	OUTSIDE LIMIT TIME	TURNED OFF	TURNED OFF

FIG. 13

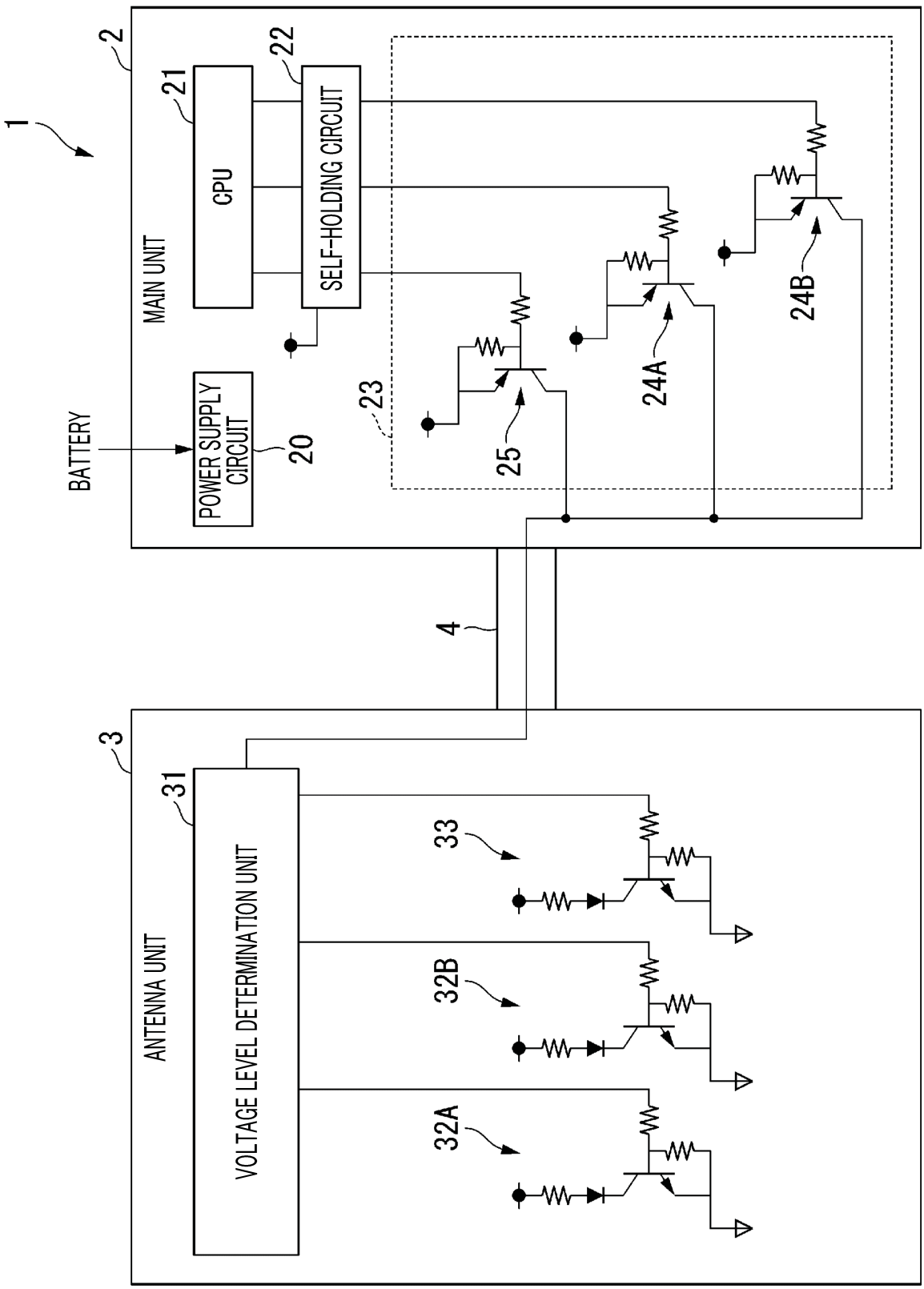
1
2
MAIN UNIT
21
CPU
22
SELF-HOLDING CIRCUIT
BATTERY
POWER SUPPLY CIRCUIT
20
23
25
24A
24B
4
3
ANTENNA UNIT
31
VOLTAGE LEVEL DETERMINATION UNIT
33
32B
32A

FIG. 14

		PARKING STATUS		ON-BOARD UNIT STATUS
ENGINE	STATE	LED1A	LED1B	LED2
ON	NORMAL	TURNED OFF	TURNED OFF	TURNED ON
	ABNORMAL	TURNED OFF	TURNED OFF	TURNED OFF
OFF	WITHIN LIMIT TIME	TURNED ON	TURNED OFF	TURNED OFF
	WITHIN LIMIT TIME (REMAINING TIME IS EQUAL TO OR SHORTER THAN n MINUTES)	TURNED OFF	TURNED ON	TURNED OFF
	OUTSIDE LIMIT TIME	TURNED OFF	TURNED OFF	TURNED OFF