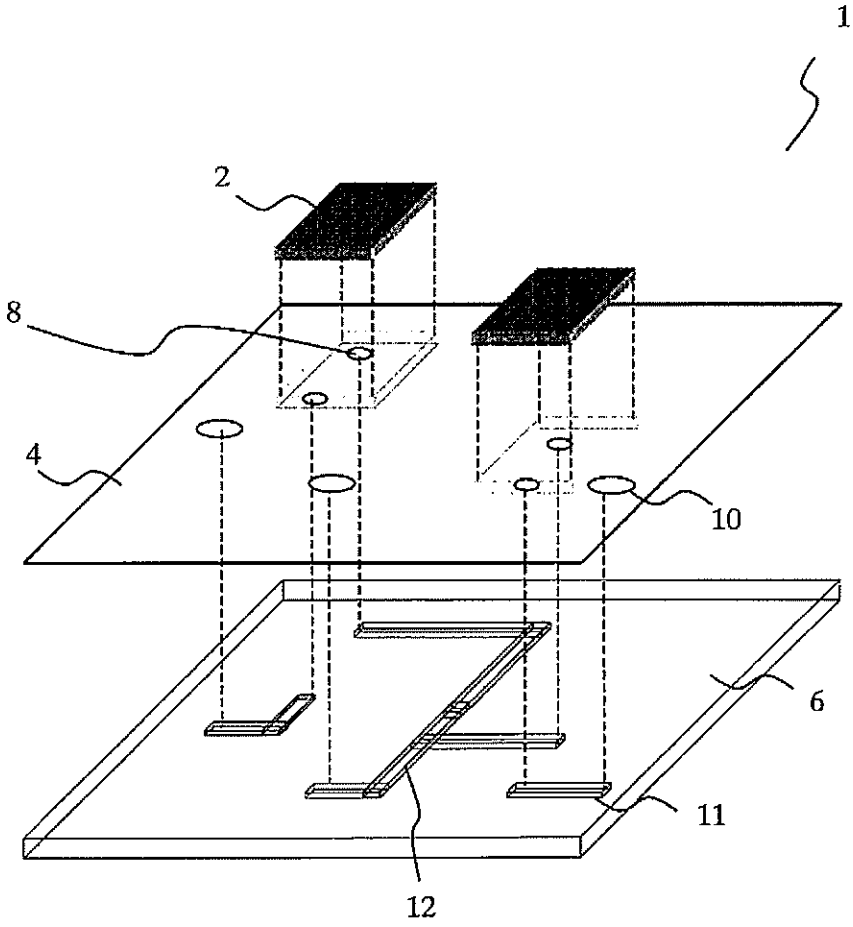

FIG. 1

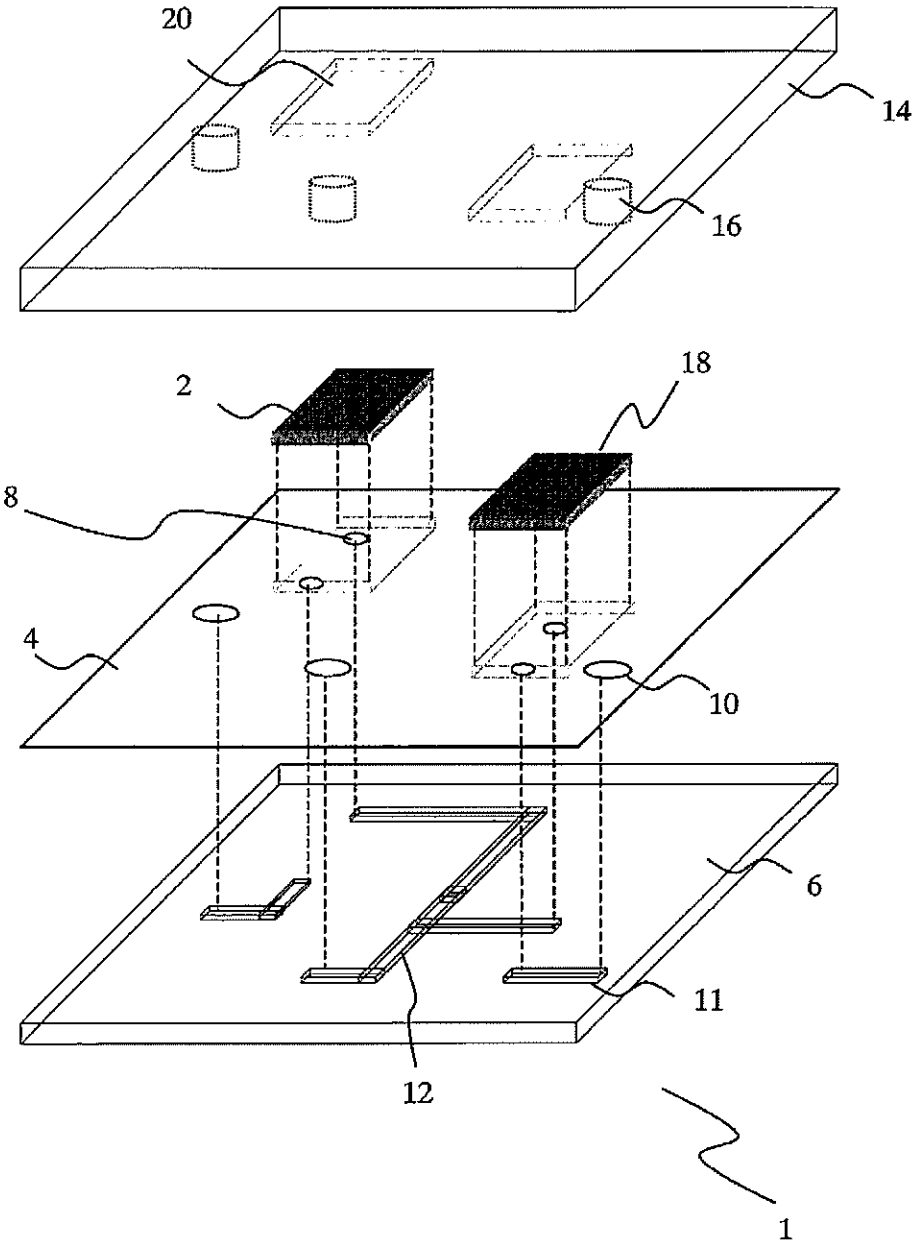

FIG. 2

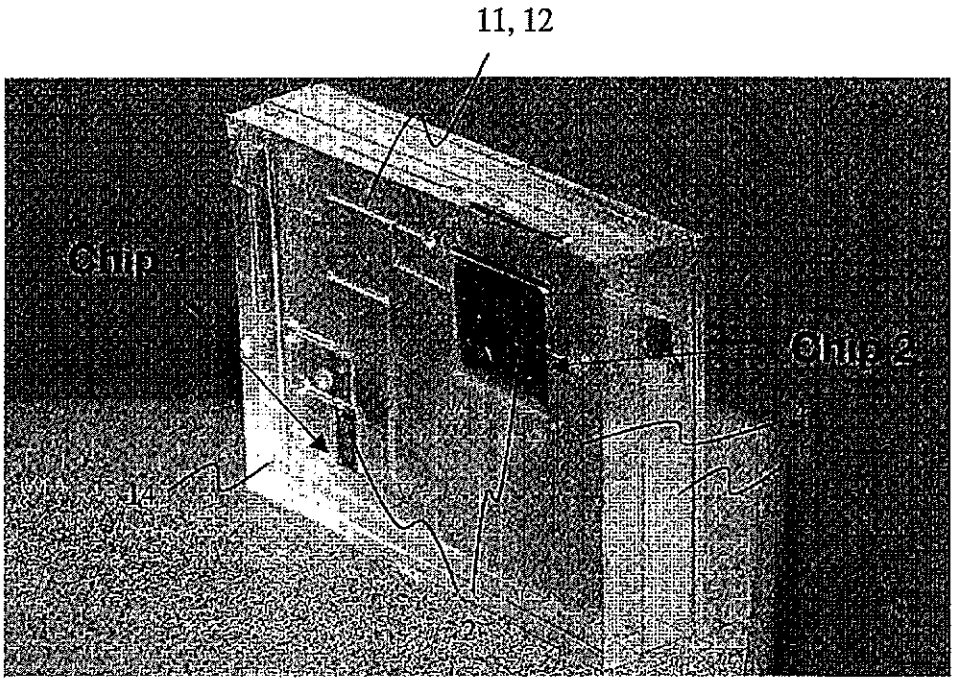

FIG. 3

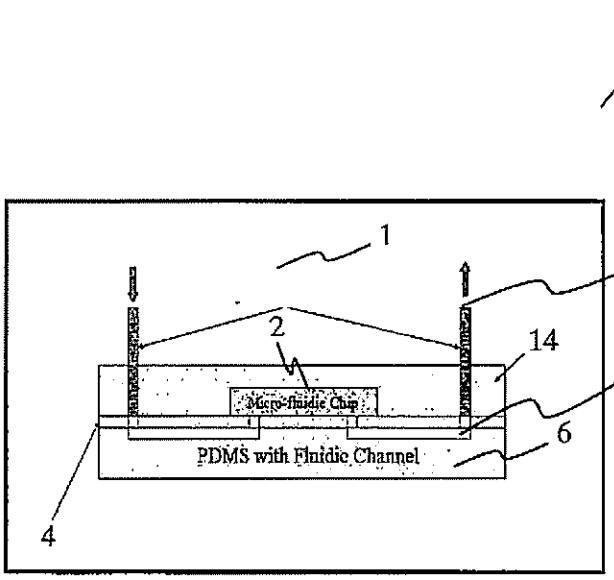
22
1
16
2
14
11, 12
Micro-fluidic Chip
6
PDMS with Fluidic Channel
4

FIG. 4

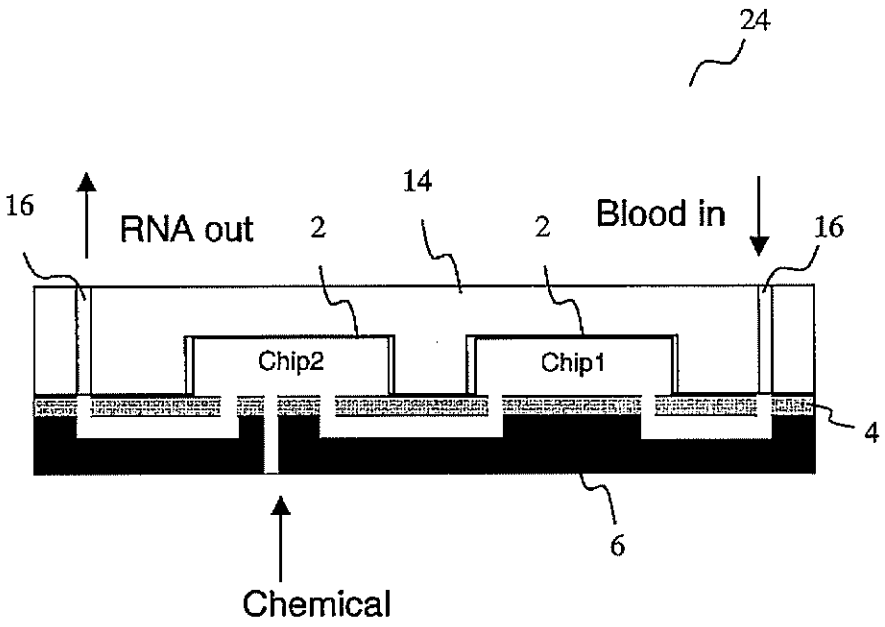

FIG. 5

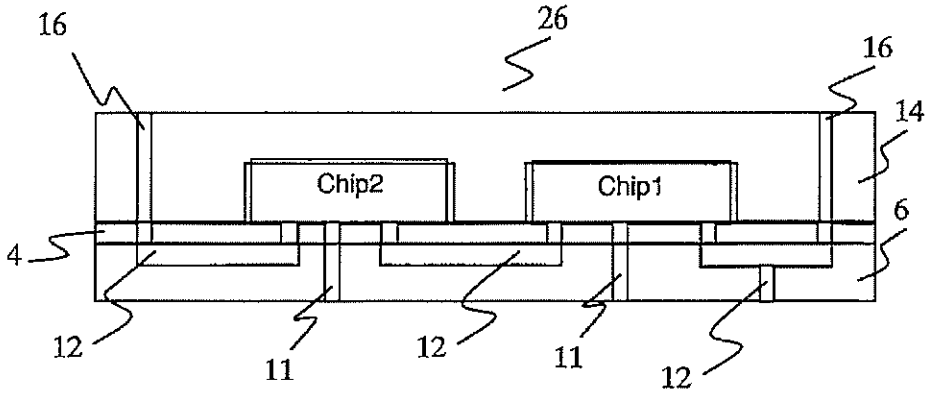
16
26
16
14
Chip2
Chip1
6
4
12
11
12
11
12

FIG. 6

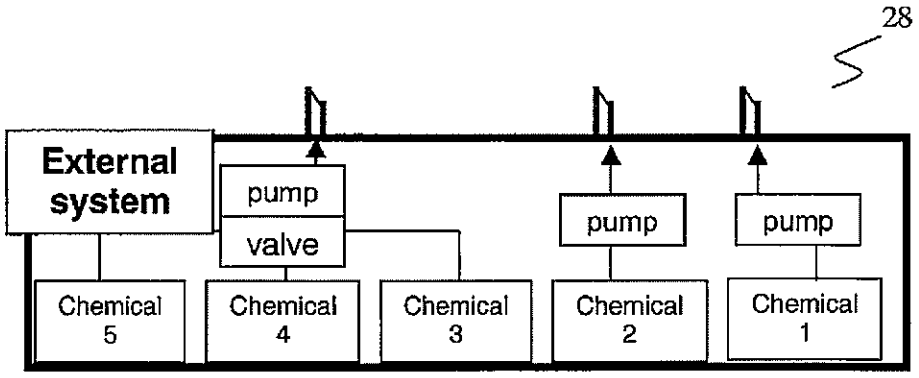
28
External system
pump
valve
pump
pump
Chemical 5
Chemical 4
Chemical 3
Chemical 2
Chemical 1

FIG. 7

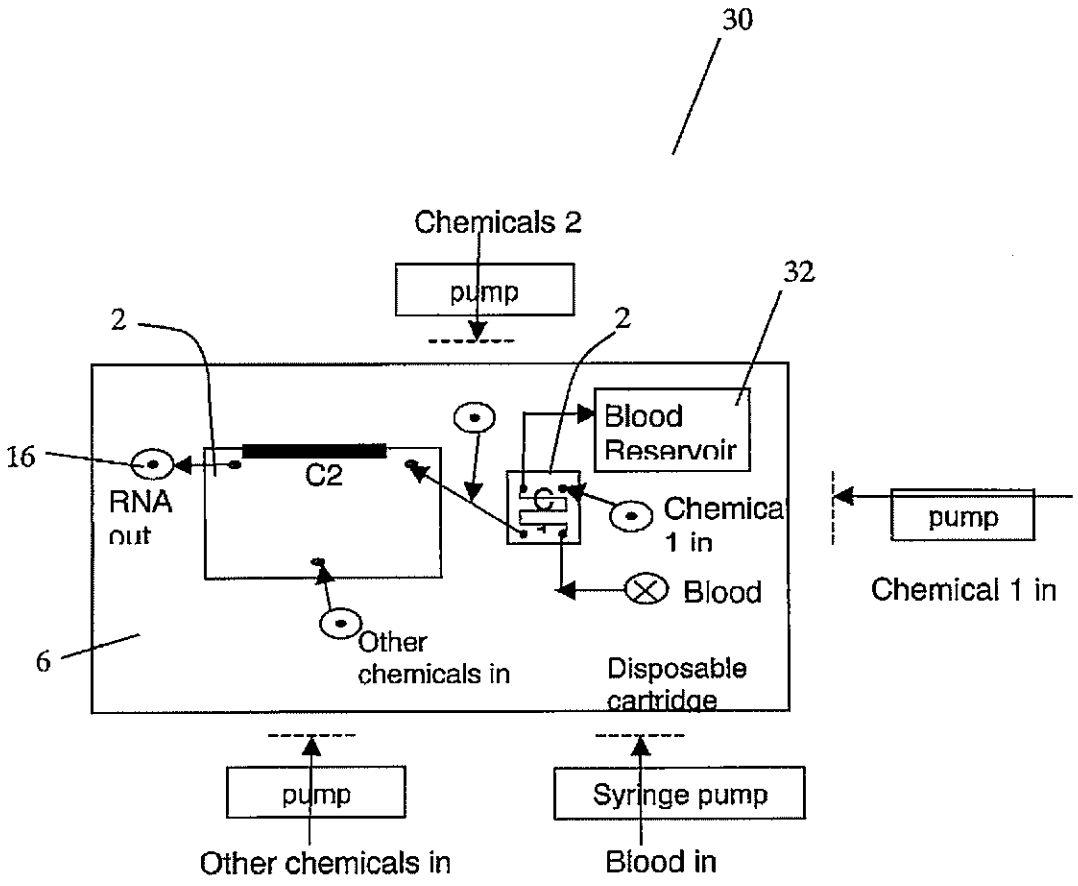
30
Chemicals 2
pump
32
2
2
Blood
Reservoir
16
C2
C1
Chemica
1 in
RNA
out
pump
Chemical 1 in
Blood
Other
chemicals in
6
Disposable
cartridge
pump
Syringe pump
Other chemicals in
Blood in

FIG. 8

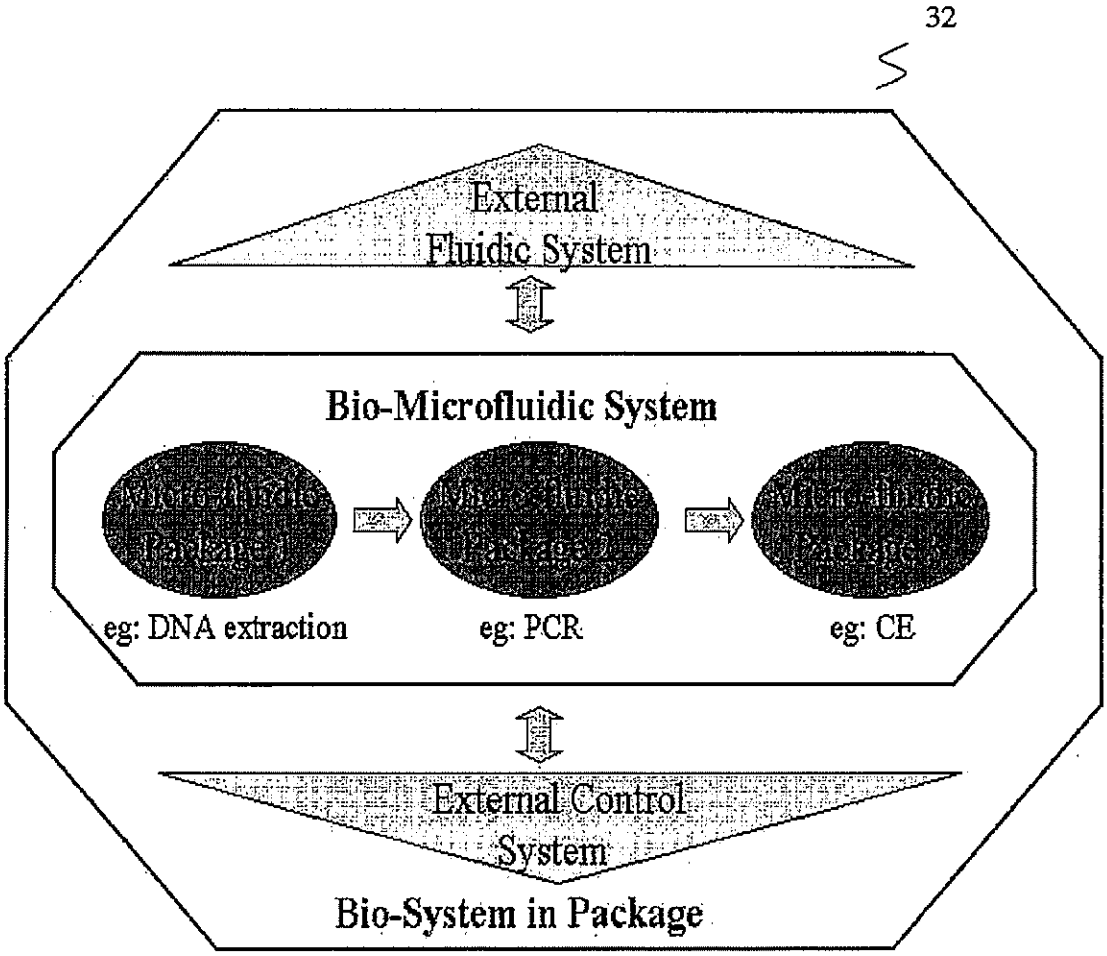
32
External
Fluidic System
Bio-Microfluidic System
Micro-fluidic
Package 1
Micro-fluidic
Package 2
Micro-fluidic
Package 3
eg: DNA extraction
eg: PCR
eg: CE
External Control
System
Bio-System in Package

FIG. 9

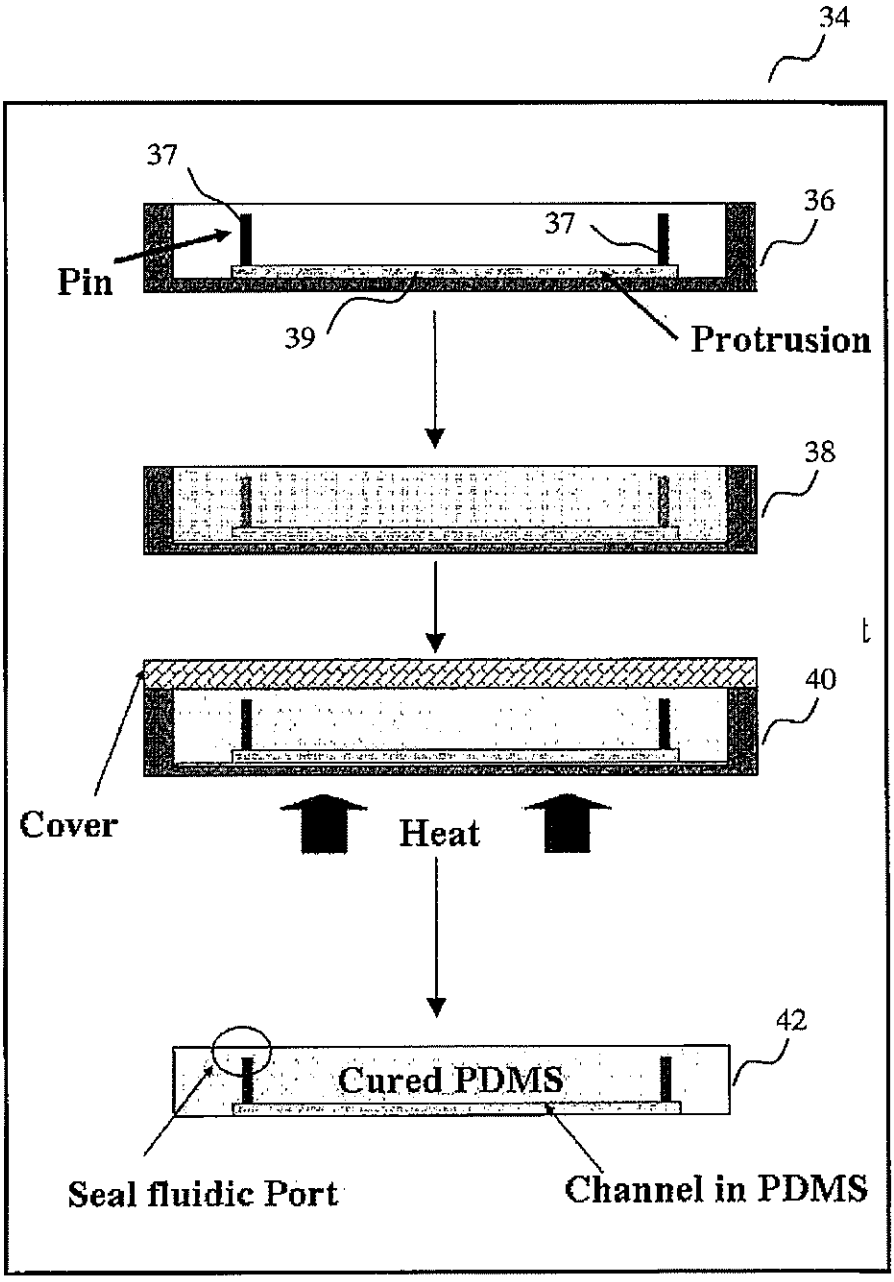
34
37
37
36
Pin
39
Protrusion
38
40
Cover
Heat
42
Cured PDMS
Seal fluidic Port
Channel in PDMS

FIG. 10

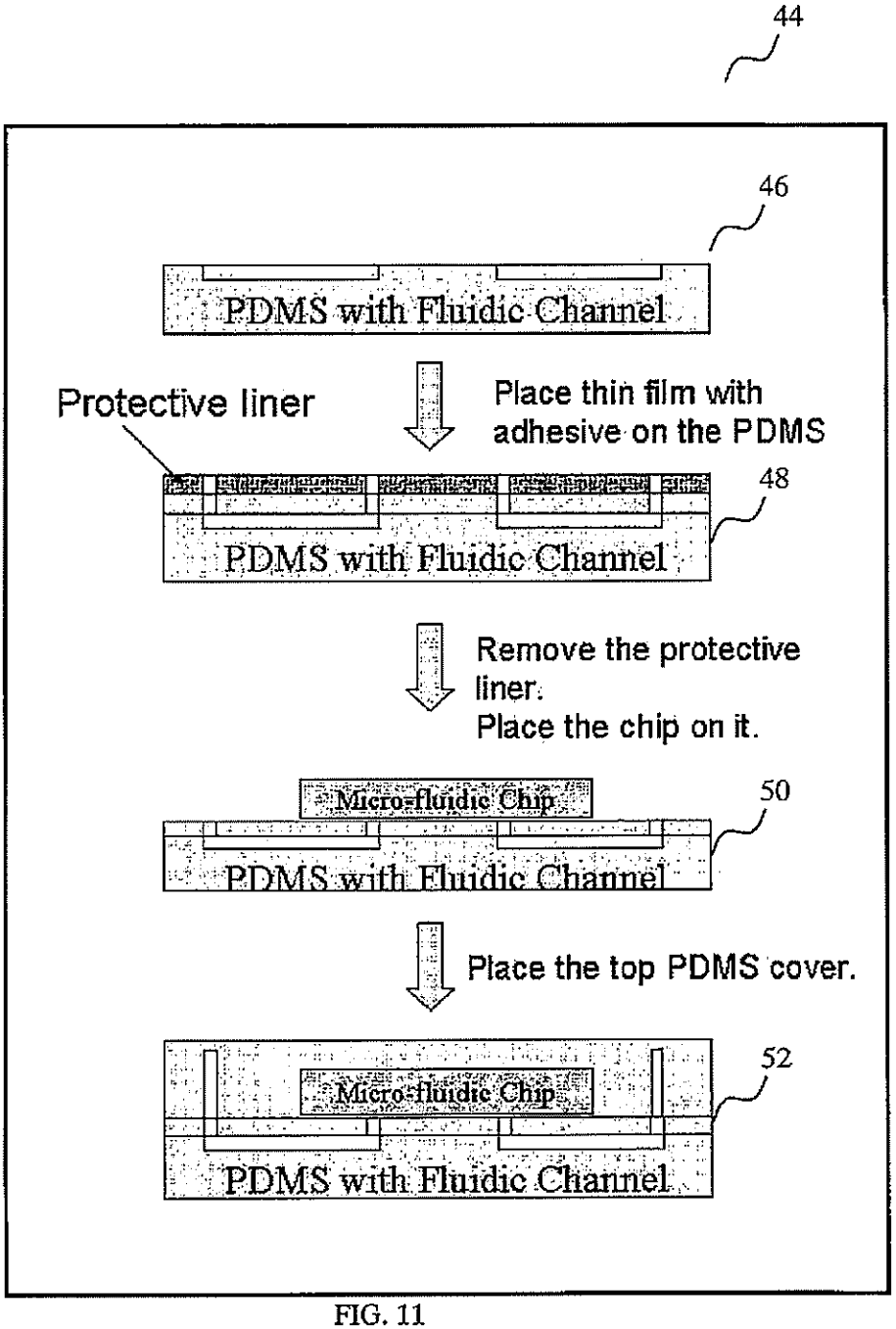
44
46
PDMS with Fluidic Channel
Protective liner
Place thin film with adhesive on the PDMS
48
PDMS with Fluidic Channel
Remove the protective liner.
Place the chip on it.
Micro-fluidic Chip
50
PDMS with Fluidic Channel
Place the top PDMS cover.
52
Micro-fluidic Chip
PDMS with Fluidic Channel

FIG. 11

(a)

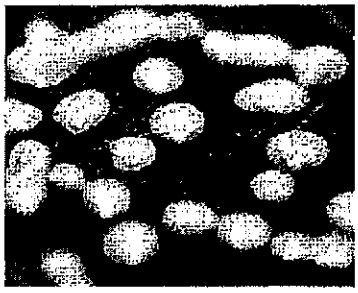

54

(b)

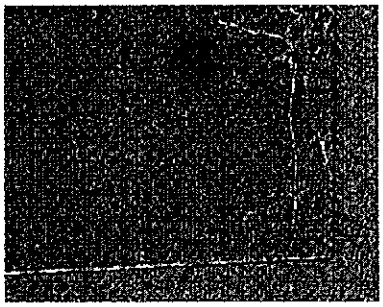

56

(c)

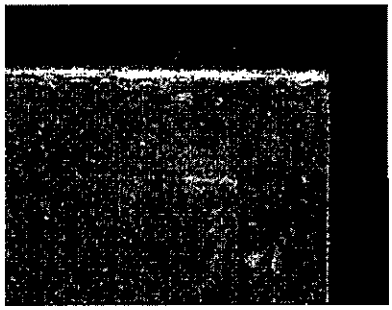

58

FIG. 12A

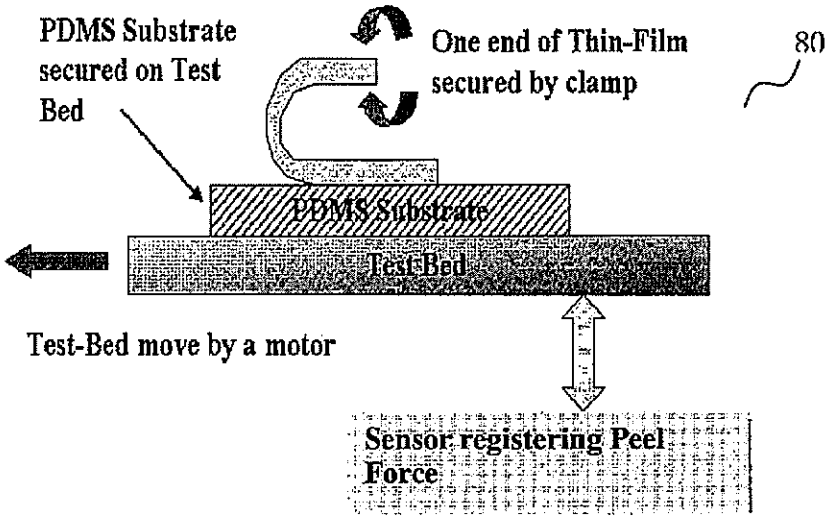

FIG. 12B

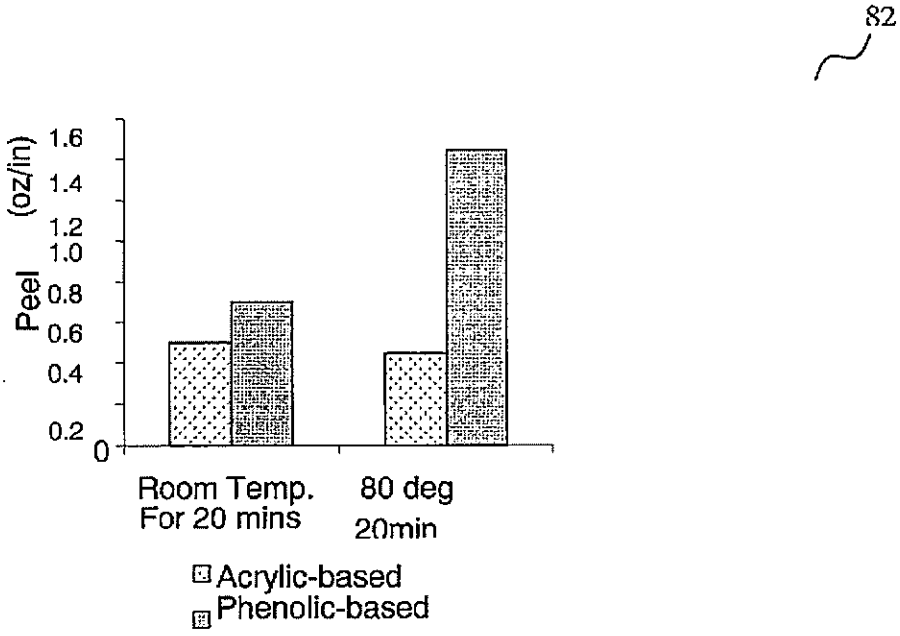

FIG. 12C

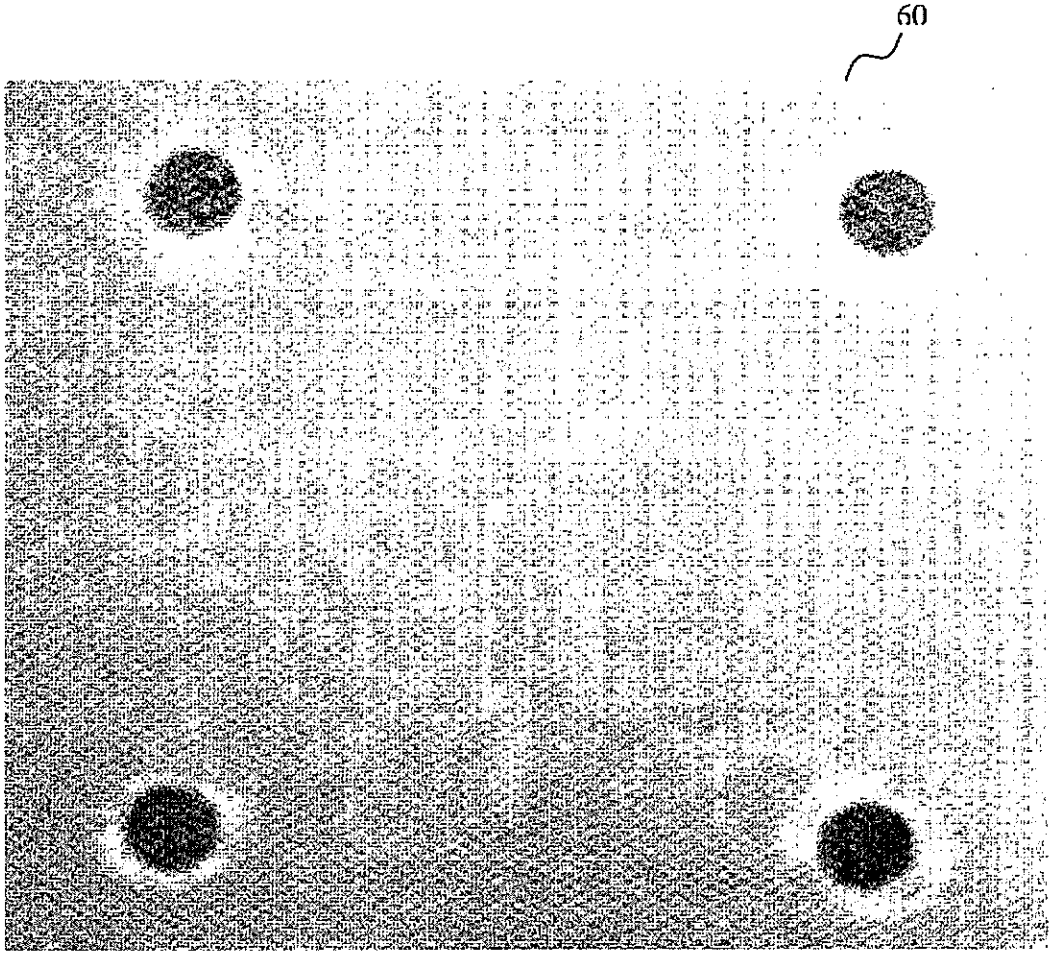

FIG. 13

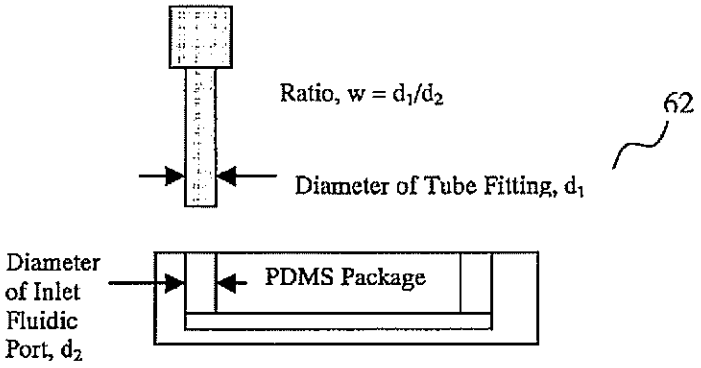

FIG. 14A

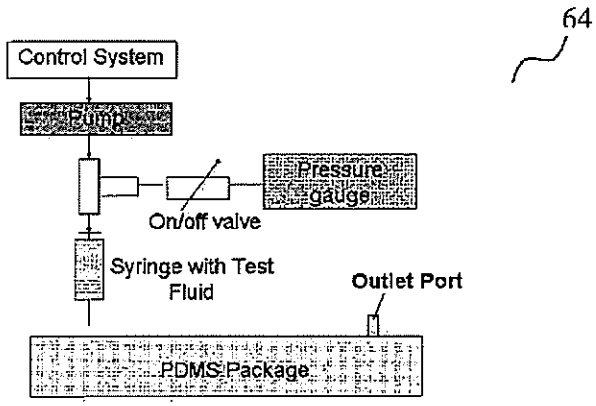

FIG. 14B

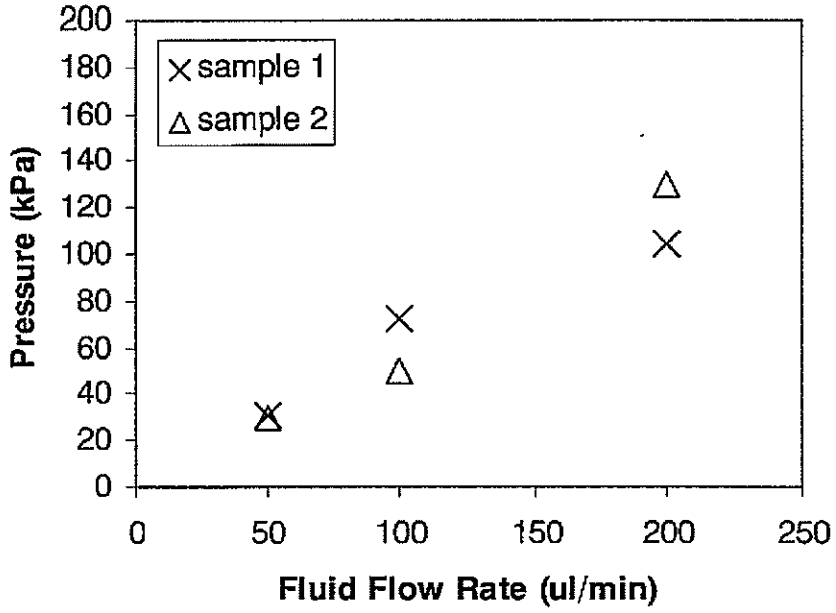

FIG. 15A

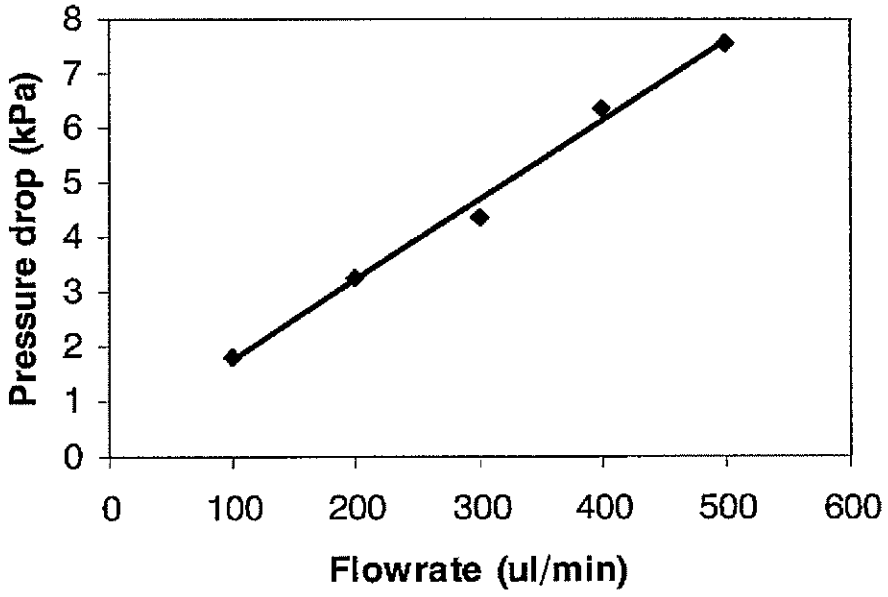

FIG. 15B

FIG. 16

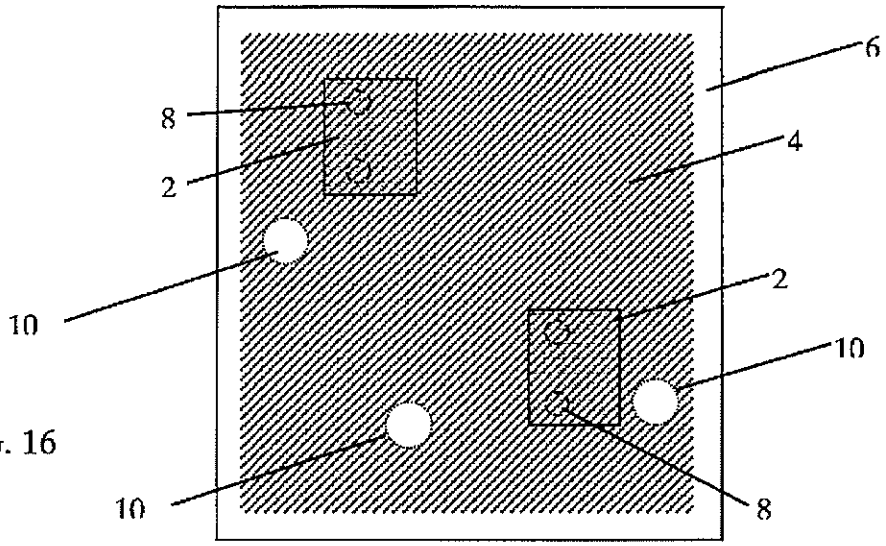

(a)

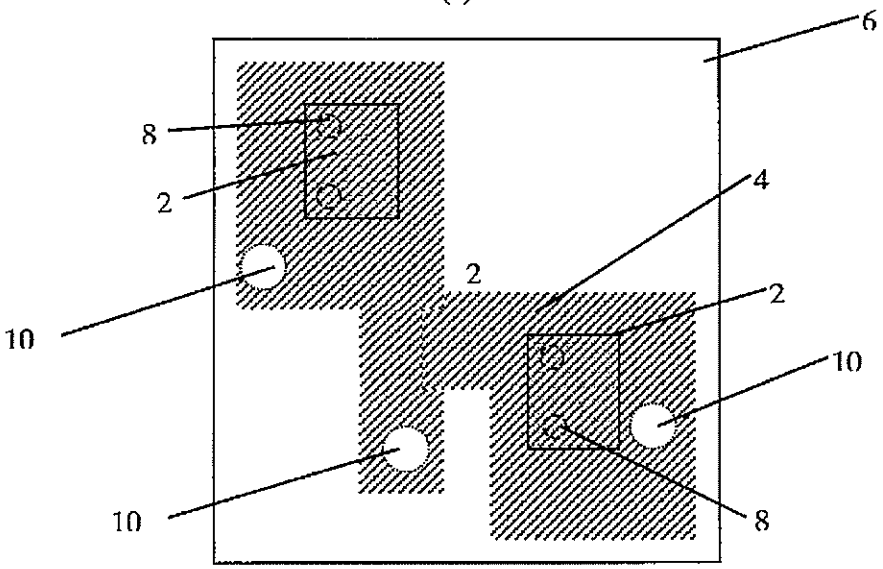

(b)

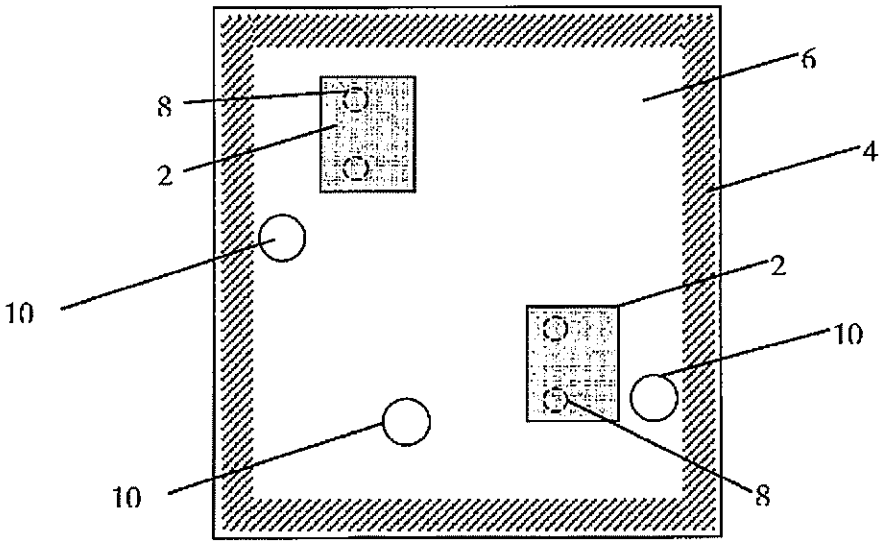

(c)

FIG. 16

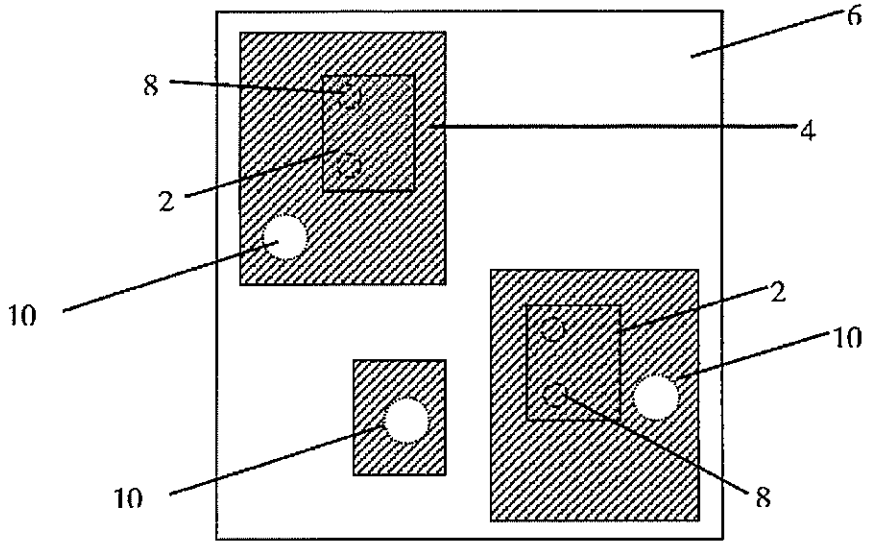

(d)

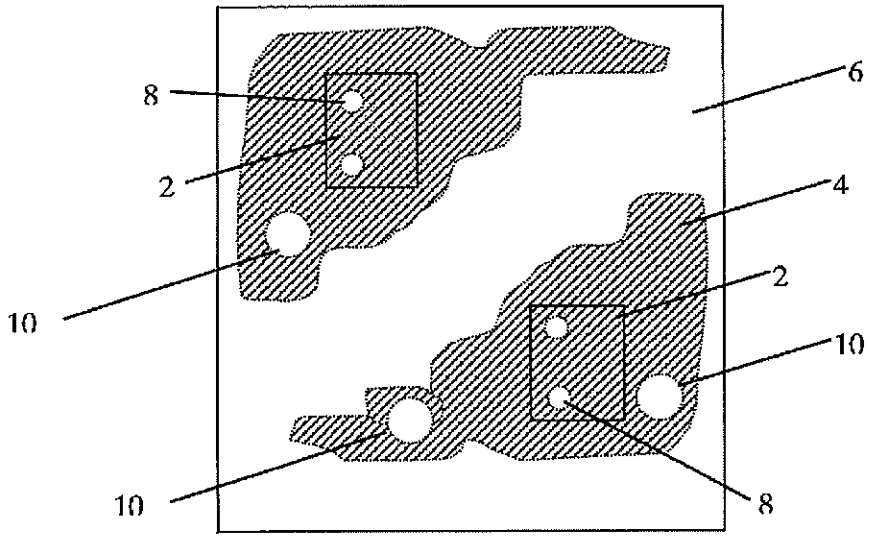

(e)

FIG. 16

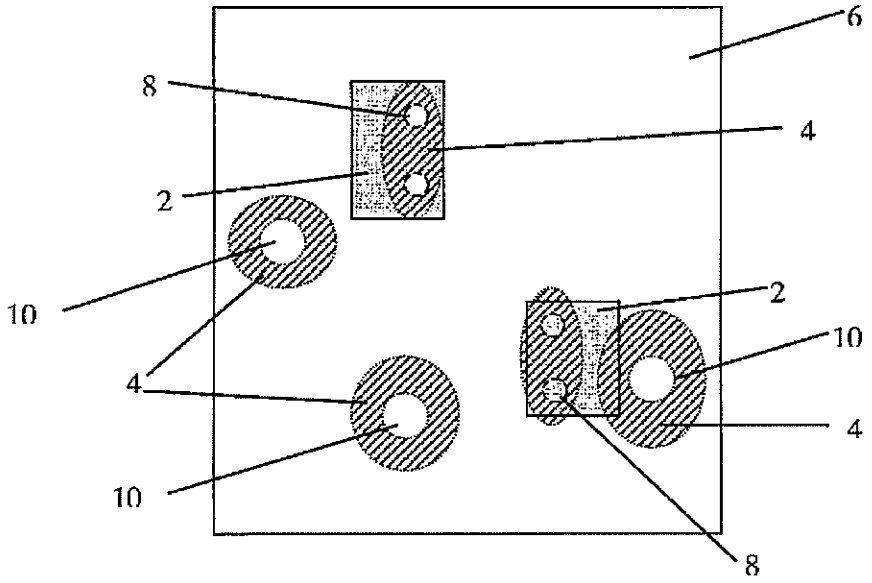

(f)