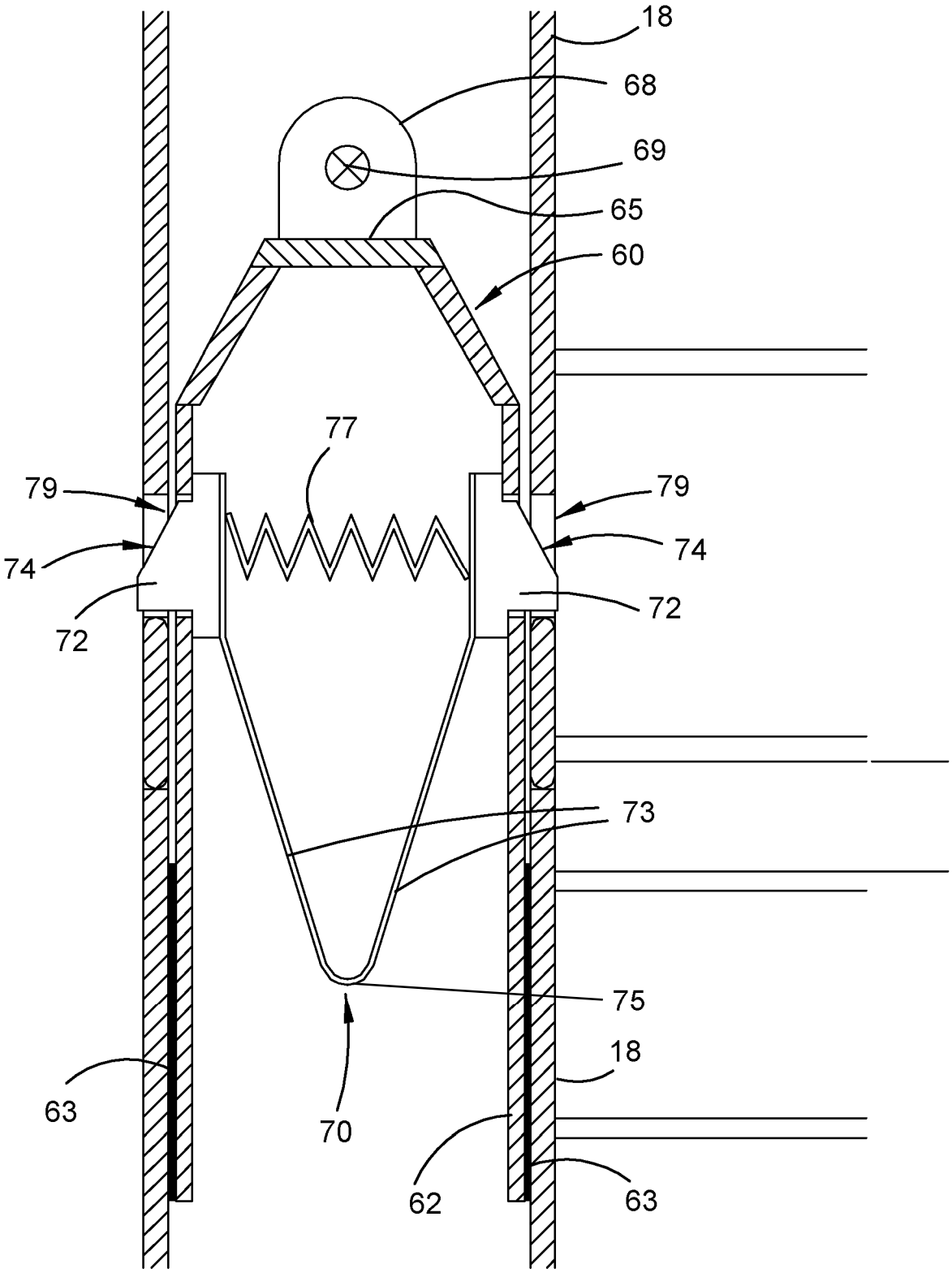

FIGURE 9