(12) INTERNATIONAL APPLICATION PUBLISHED UNDER THE PATENT COOPERATION TREATY (PCT)

CORRECTED VERSION

(19) World Intellectual Property Organization
International Bureau

(43) International Publication Date
13 October 2005 (13.10.2005)

PCT

(10) International Publication Number
WO 2005/095087 A3

(51) International Patent Classification:
B29C 51/16 (2006.01) *B29C 43/00* (2006.01)
B29C 69/00 (2006.01) *B29C 45/00* (2006.01)
B29C 35/02 (2006.01) *B29C 51/02* (2006.01)
B29C 35/16 (2006.01) *B29C 51/08* (2006.01)
B29C 39/00 (2006.01) *B29C 51/42* (2006.01)

(21) International Application Number:
PCT/US2005/000984

(22) International Filing Date: 13 January 2005 (13.01.2005)

(25) Filing Language: English

(26) Publication Language: English

(30) Priority Data:
60/539,188 26 January 2004 (26.01.2004) US
10/811,441 26 March 2004 (26.03.2004) US

(71) Applicant *(for all designated States except US)*: **GENERAL ELECTRIC COMPANY** [US/US]; 1 River Road, Schenectady, NY 12345 (US).

(72) Inventors; and
(75) Inventors/Applicants *(for US only)*: **DAVIS, Scott, Michael** [US/US]; 35 Circular Avenue, Lee, MA 01238 (US). **DUNTON, Thomas, Paul** [US/US]; 14880 Route 22, Lebanon Springs, NY 12125 (US). **MYERS, Randall, Todd** [US/US]; 13 Kathy Way, Pittsfield, MA 01201 (US).

(74) Agents: **GNIBUS, Michael** et al.; Patent Counsel, General Electric Company, 3135 Easton Turnpike (W3C), Fairfield, CT 06828 (US).

(81) Designated States *(unless otherwise indicated, for every kind of national protection available)*: AE, AG, AL, AM, AT, AU, AZ, BA, BB, BG, BR, BW, BY, BZ, CA, CH, CN, CO, CR, CU, CZ, DE, DK, DM, DZ, EC, EE, EG, ES, FI, GB, GD, GE, GH, GM, HR, HU, ID, IL, IN, IS, JP, KE, KG, KP, KR, KZ, LC, LK, LR, LS, LT, LU, LV, MA, MD, MG, MK, MN, MW, MX, MZ, NA, NI, NO, NZ, OM, PG, PH, PL, PT, RO, RU, SC, SD, SE, SG, SK, SL, SM, SY, TJ, TM, TN, TR, TT, TZ, UA, UG, US, UZ, VC, VN, YU, ZA, ZM, ZW.

(84) Designated States *(unless otherwise indicated, for every kind of regional protection available)*: ARIPO (BW, GH, GM, KE, LS, MW, MZ, NA, SD, SL, SZ, TZ, UG, ZM, ZW), Eurasian (AM, AZ, BY, KG, KZ, MD, RU, TJ, TM), European (AT, BE, BG, CH, CY, CZ, DE, DK, EE, ES, FI, FR, GB, GR, HU, IE, IS, IT, LT, LU, MC, NL, PL, PT, RO, SE, SI, SK, TR), OAPI (BF, BJ, CF, CG, CI, CM, GA, GN, GQ, GW, ML, MR, NE, SN, TD, TG).

Declarations under Rule 4.17:
— *as to applicant's entitlement to apply for and be granted a patent (Rule 4.17(ii))*
— *as to the applicant's entitlement to claim the priority of the earlier application (Rule 4.17(iii))*

Published:
— *with international search report*

(88) Date of publication of the international search report:
26 January 2006

(48) Date of publication of this corrected version:
29 June 2006

(15) Information about Correction:
see PCT Gazette No. 26/2006 of 29 June 2006

For two-letter codes and other abbreviations, refer to the "Guidance Notes on Codes and Abbreviations" appearing at the beginning of each regular issue of the PCT Gazette.

(54) Title: REINFORCED RESINOUS ARTICLE AND METHOD OF MAKING THE REINFORCED RESINOUS ARTICLE

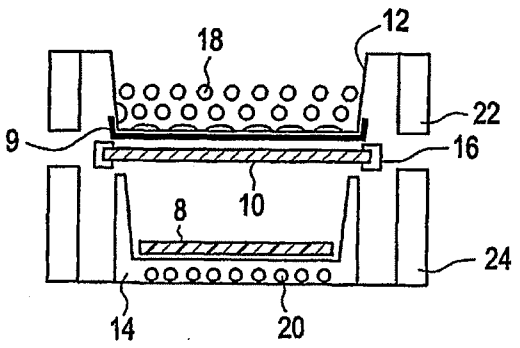

(57) Abstract: A process for forming a shaped, multilayer article comprises heating a reinforced resinous substrate to a thermoforming temperature to form a heated substrate (10) ; contacting a surface of the heated substrate (8) with a surface of shaped surface component, wherein the heated substrate has a sufficient concentration of heated resin at the surface thereof for bonding the heated substrate to the shaped surface component; and thermoforming the heated substrate at a pressure less than or equal to about 500 psi (3447 kPa) to provide a bond at an interface between the surface of the thermoformed substrate and the surface of the shaped surface component.

WO 2005/095087 A3