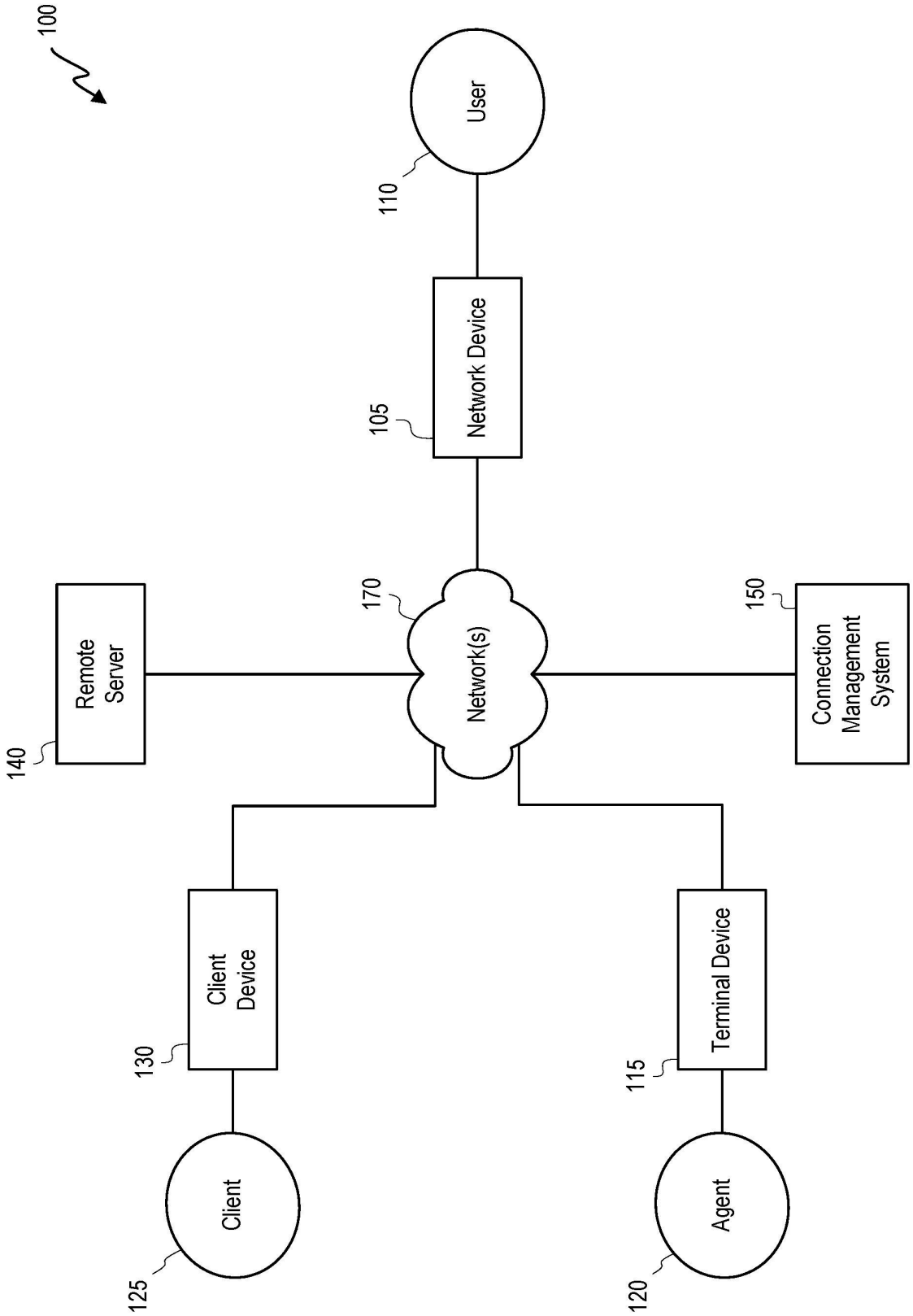
100
User
110
Network Device
105
Remote Server
140
Network(s)
170
Connection Management System
150
Client Device
130
Terminal Device
115
Client
125
Agent
120

FIG. 1

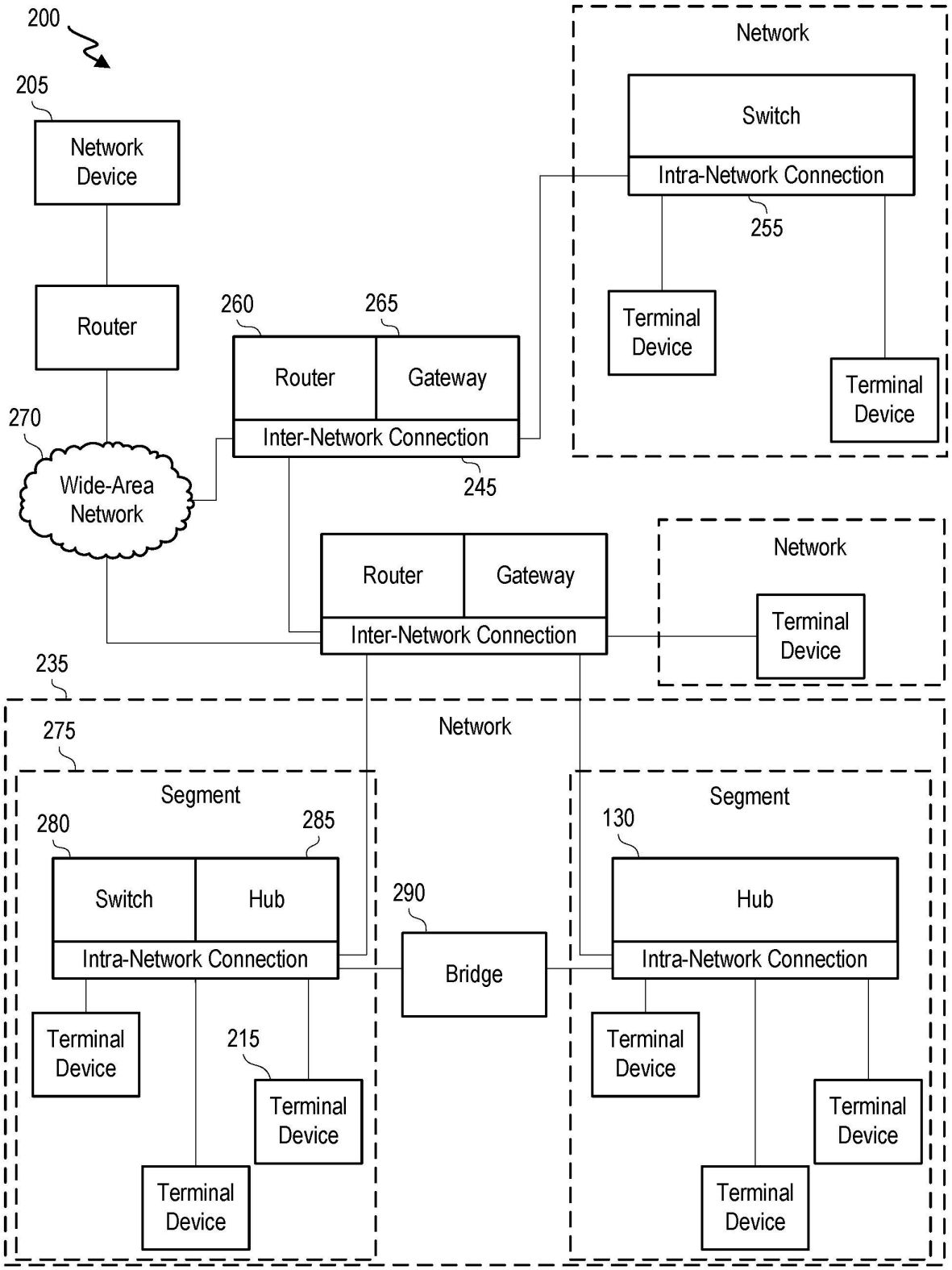
200
205
Network Device
Router
270
Wide-Area Network
260
265
Router
Gateway
Inter-Network Connection
245
Network
Switch
Intra-Network Connection
255
Terminal Device
Terminal Device
Router
Gateway
Inter-Network Connection
Network
Terminal Device
235
Network
275
Segment
280
285
Switch
Hub
Intra-Network Connection
290
Bridge
Terminal Device
215
Terminal Device
Terminal Device
Segment
130
Hub
Intra-Network Connection
Terminal Device
Terminal Device
Terminal Device

FIG. 2

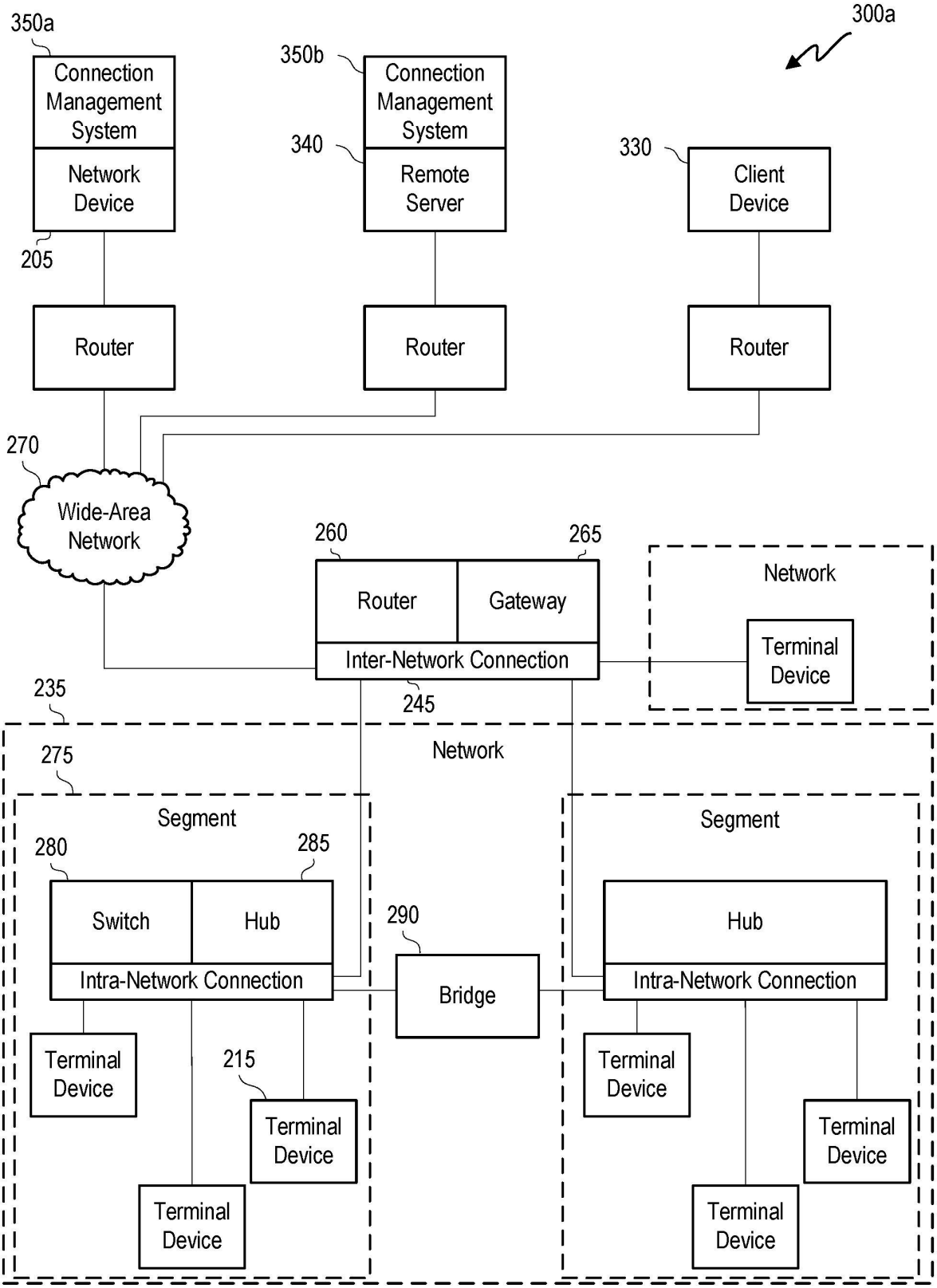
300a
350a
Connection Management System
Network Device
205
350b
Connection Management System
340
Remote Server
330
Client Device
Router
Router
Router
270
Wide-Area Network
260
265
Router
Gateway
Inter-Network Connection
245
Network
Terminal Device
235
Network
275
Segment
280
285
Switch
Hub
Intra-Network Connection
290
Bridge
Segment
Hub
Intra-Network Connection
Terminal Device
215
Terminal Device
Terminal Device
Terminal Device
Terminal Device
Terminal Device

FIG. 3A

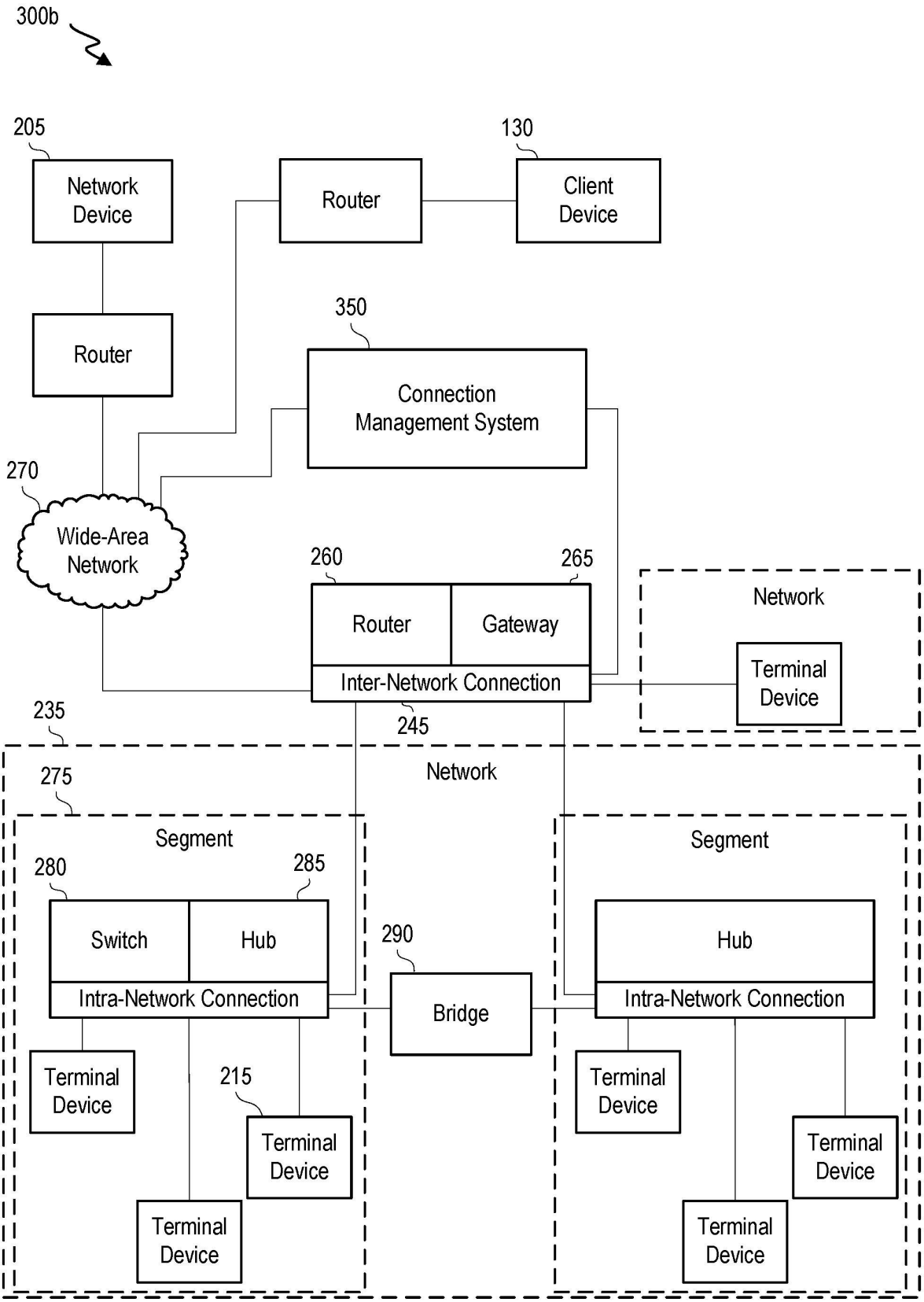
300b
205
Network Device
Router
130
Client Device
Router
350
Connection Management System
270
Wide-Area Network
260
265
Router
Gateway
Inter-Network Connection
245
Network
Terminal Device
235
Network
275
Segment
280
285
Switch
Hub
Intra-Network Connection
290
Bridge
Terminal Device
215
Terminal Device
Terminal Device
Segment
Hub
Intra-Network Connection
Terminal Device
Terminal Device
Terminal Device

FIG. 3B

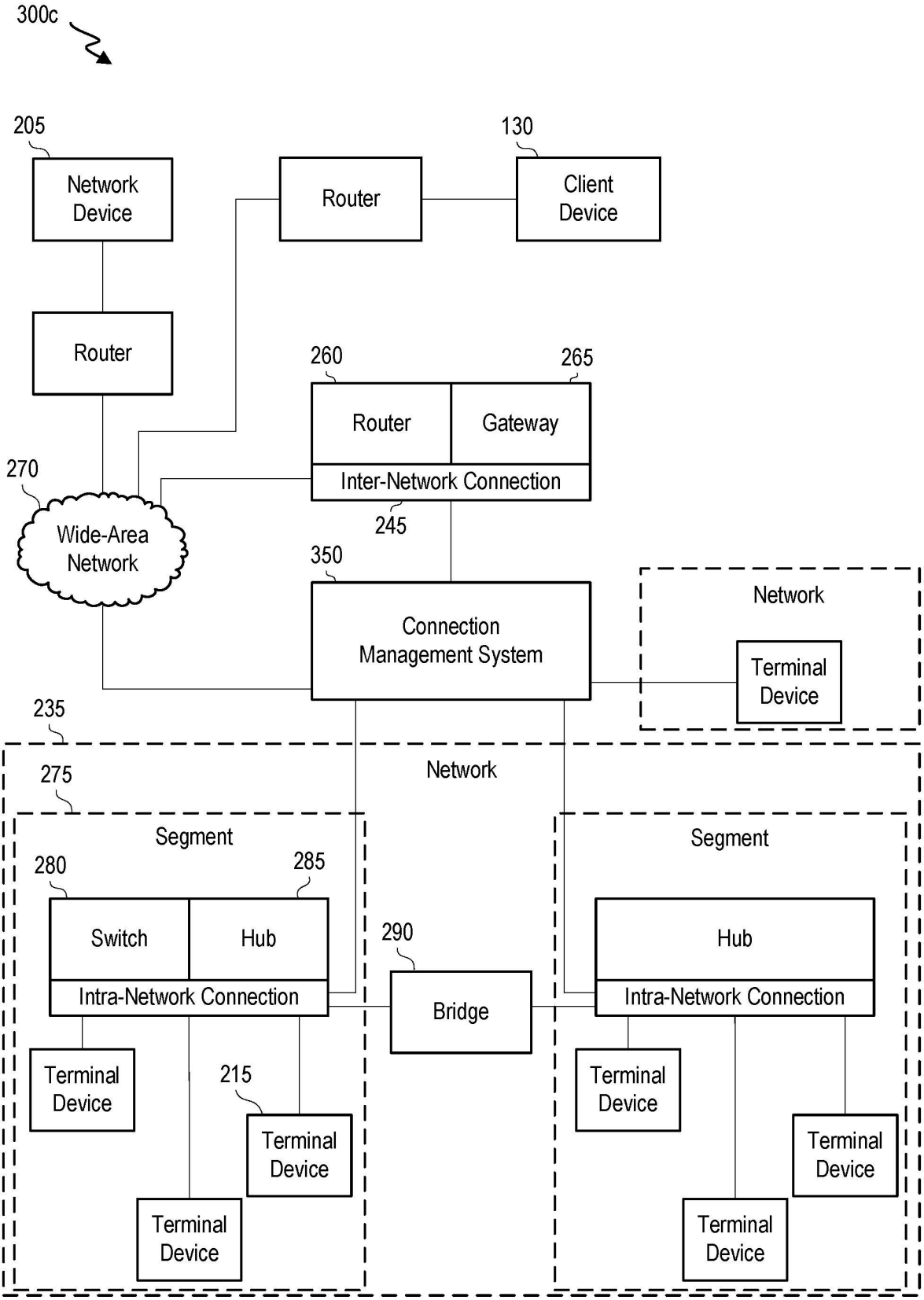
300c
205
Network Device
Router
130
Client Device
Router
260
265
Router
Gateway
Inter-Network Connection
270
Wide-Area Network
245
350
Connection Management System
Network
Terminal Device
235
Network
275
Segment
Segment
280
285
Switch
Hub
290
Hub
Intra-Network Connection
Bridge
Intra-Network Connection
Terminal Device
215
Terminal Device
Terminal Device
Terminal Device
Terminal Device
Terminal Device

FIG. 3C

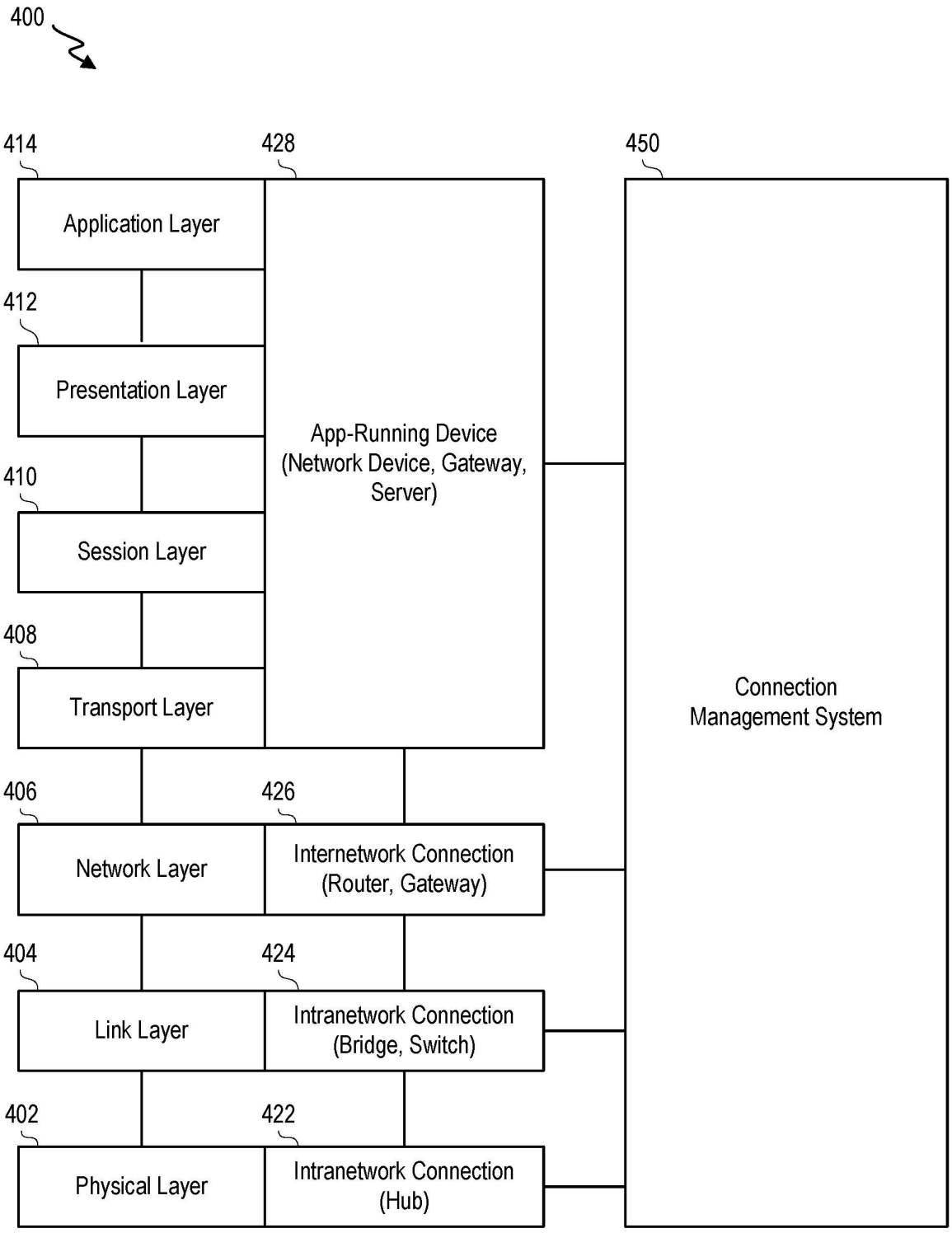
400
414
428
450
Application Layer
412
Presentation Layer
410
Session Layer
408
Transport Layer
App-Running Device
(Network Device, Gateway,
Server)
Connection
Management System
406
426
Network Layer
Internetwork Connection
(Router, Gateway)
404
424
Link Layer
Intranetwork Connection
(Bridge, Switch)
402
422
Physical Layer
Intranetwork Connection
(Hub)

FIG. 4

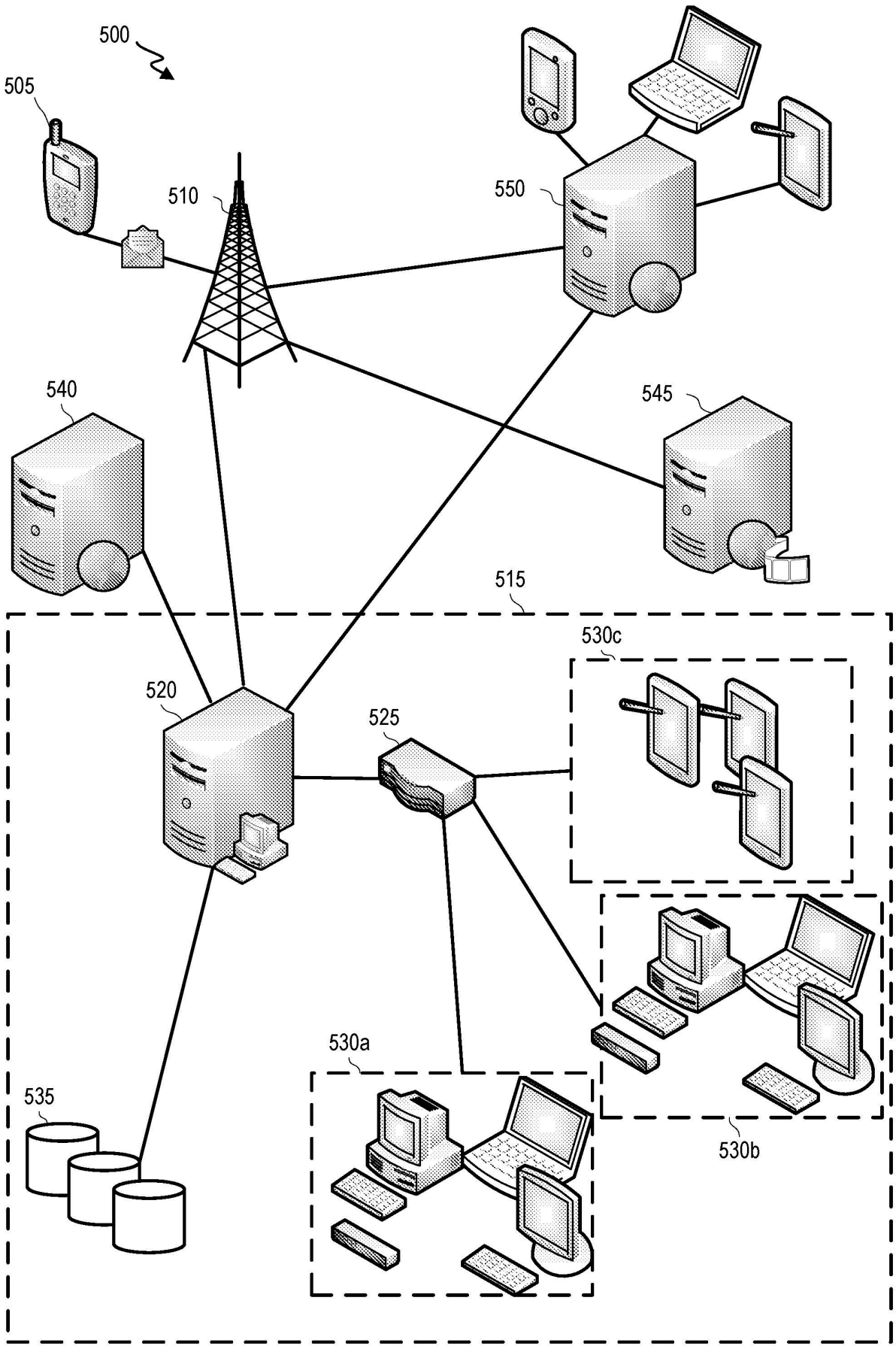

FIG. 5

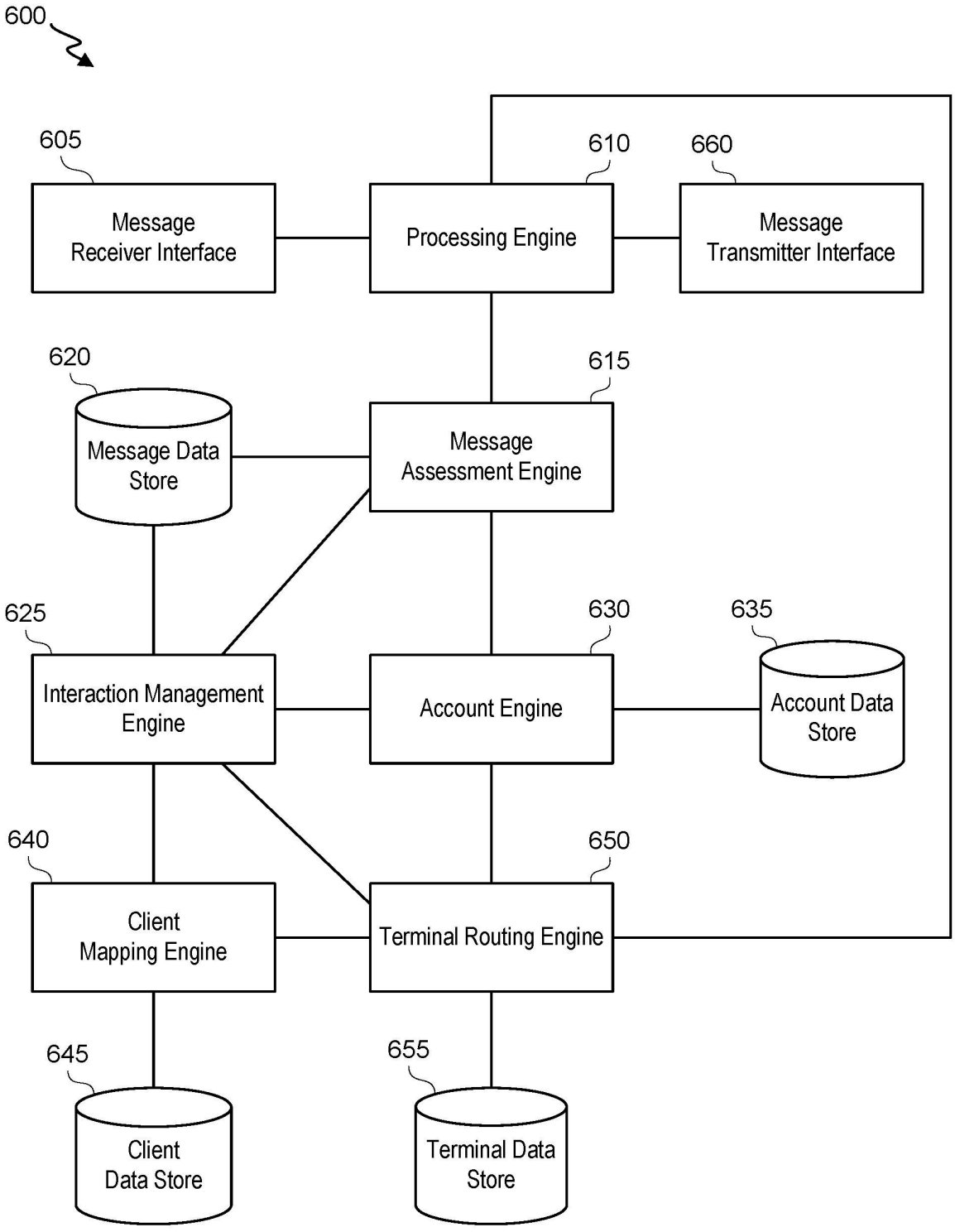
600
605
Message Receiver Interface
610
Processing Engine
660
Message Transmitter Interface
620
Message Data Store
615
Message Assessment Engine
625
Interaction Management Engine
630
Account Engine
635
Account Data Store
640
Client Mapping Engine
650
Terminal Routing Engine
645
Client Data Store
655
Terminal Data Store

FIG. 6

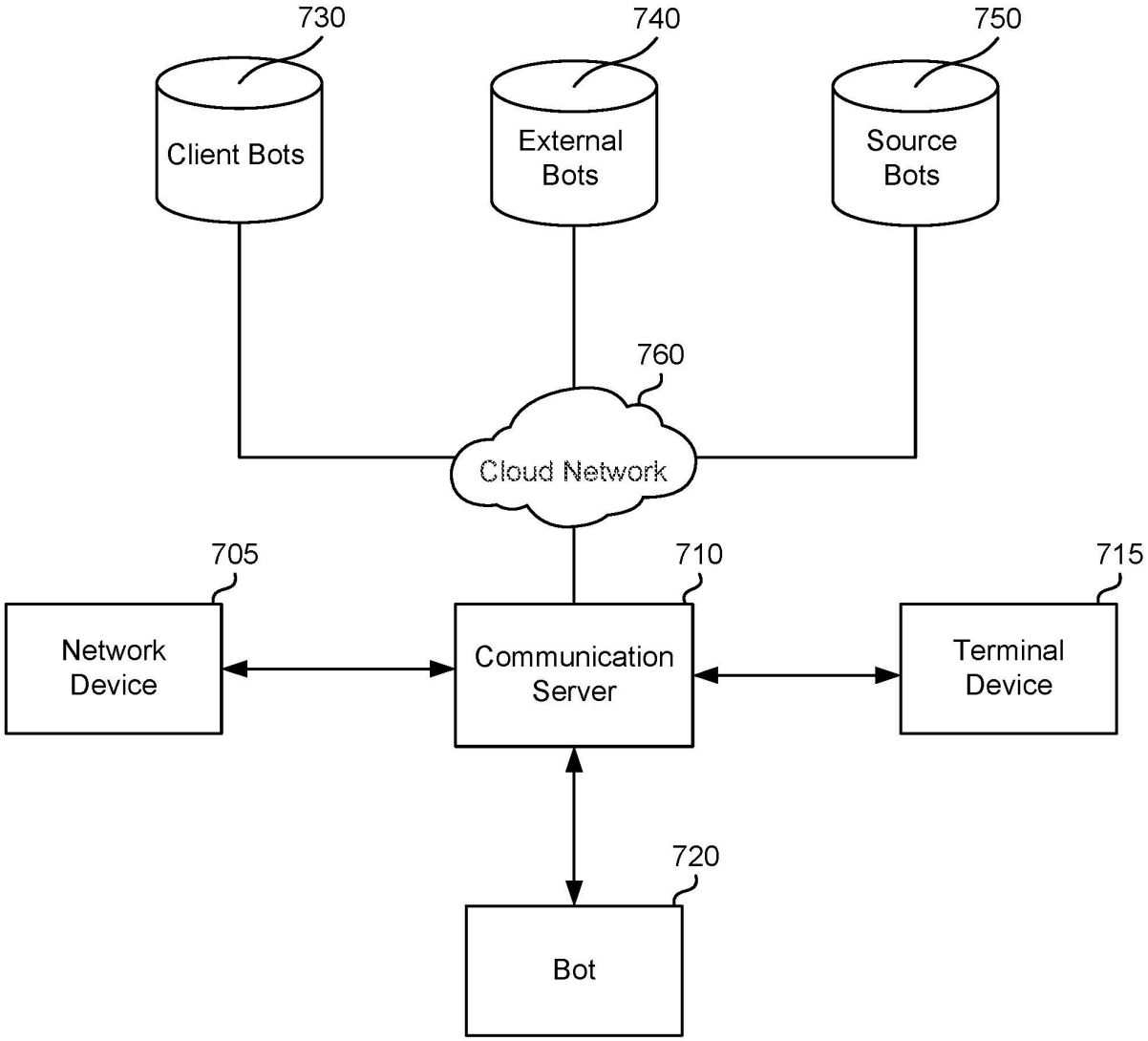
730
740
750
Client Bots
External Bots
Source Bots
760
Cloud Network
705
710
715
Network Device
Communication Server
Terminal Device
720
Bot

700

FIG. 7

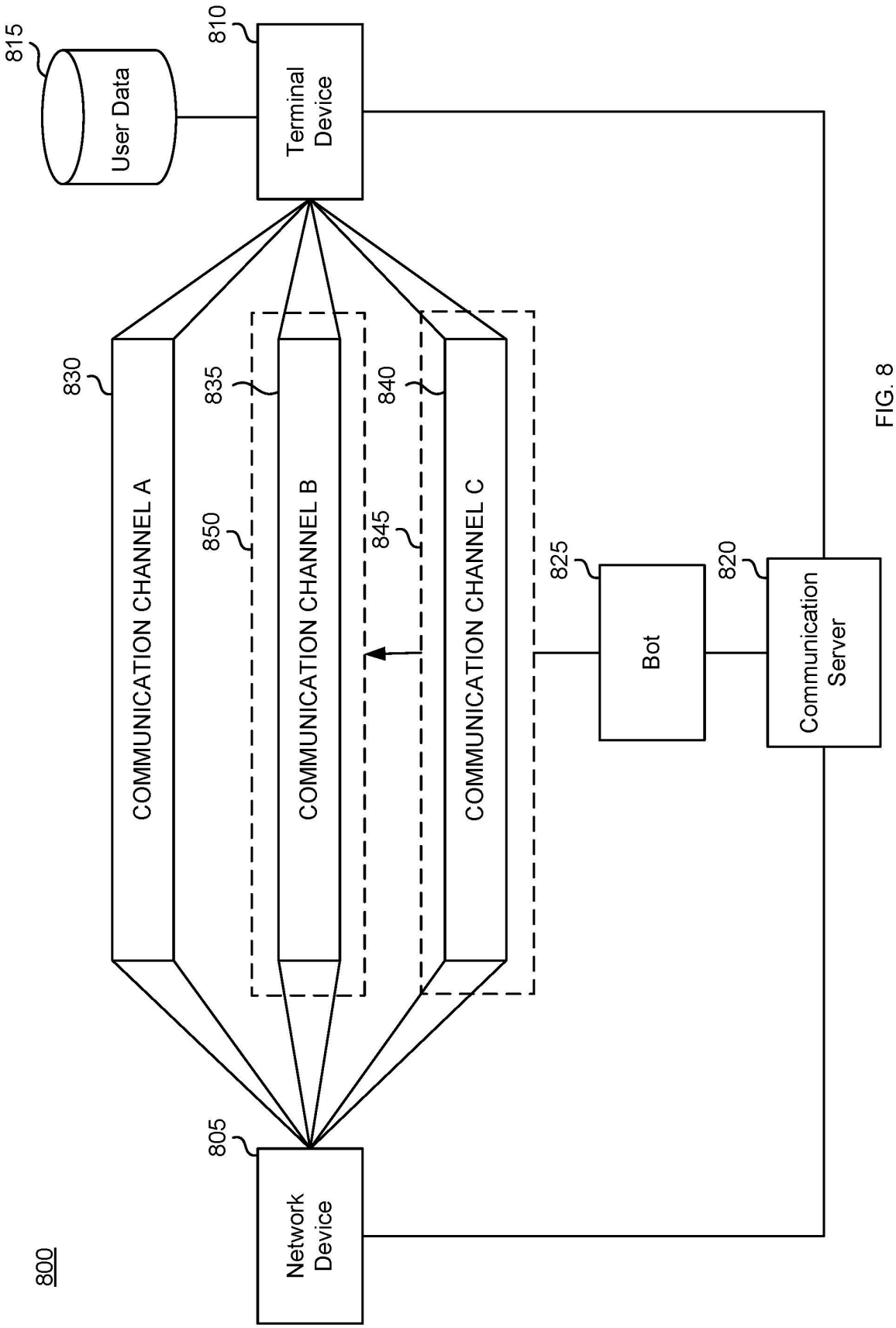
800
Network Device
805
Terminal Device
810
User Data
815
COMMUNICATION CHANNEL A
830
COMMUNICATION CHANNEL B
835
COMMUNICATION CHANNEL C
840
850
845
Bot
825
Communication Server
820

FIG. 8

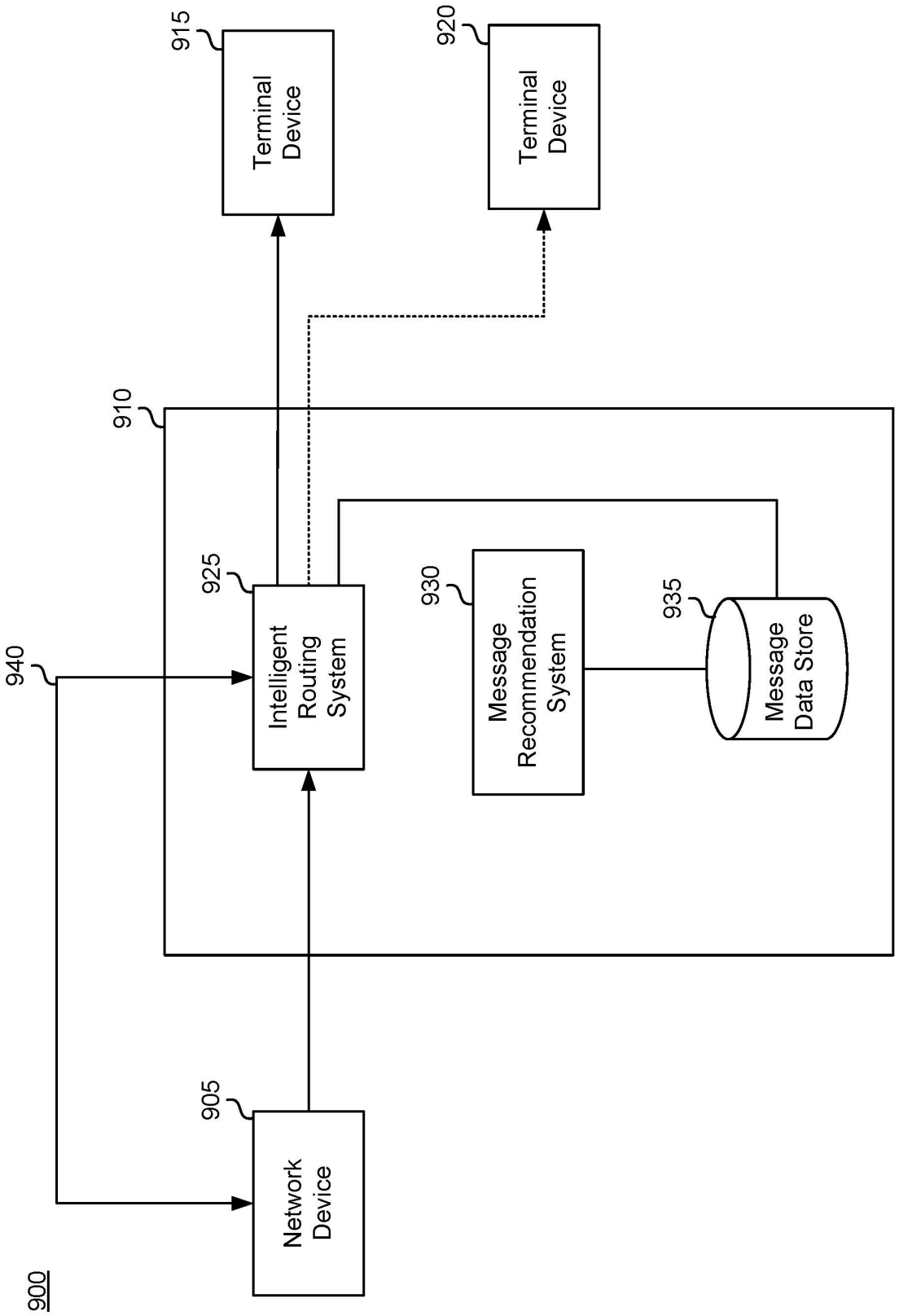
900
Network Device
905
Intelligent Routing System
925
Message Recommendation System
930
Message Data Store
935
910
940
Terminal Device
915
Terminal Device
920

FIG. 9

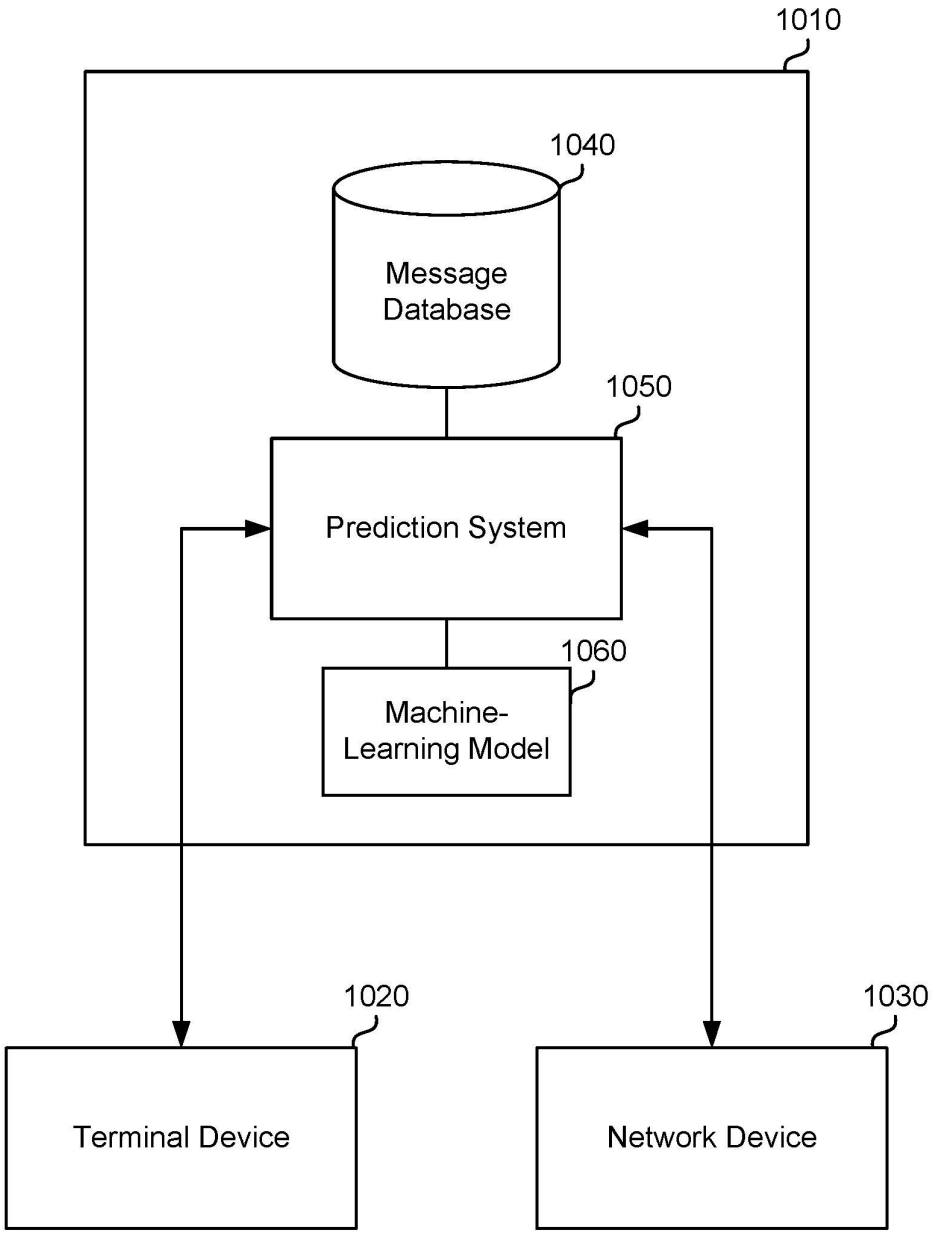
1010
1040
Message Database
1050
Prediction System
1060
Machine-Learning Model
1020
Terminal Device
1030
Network Device

1000

FIG. 10

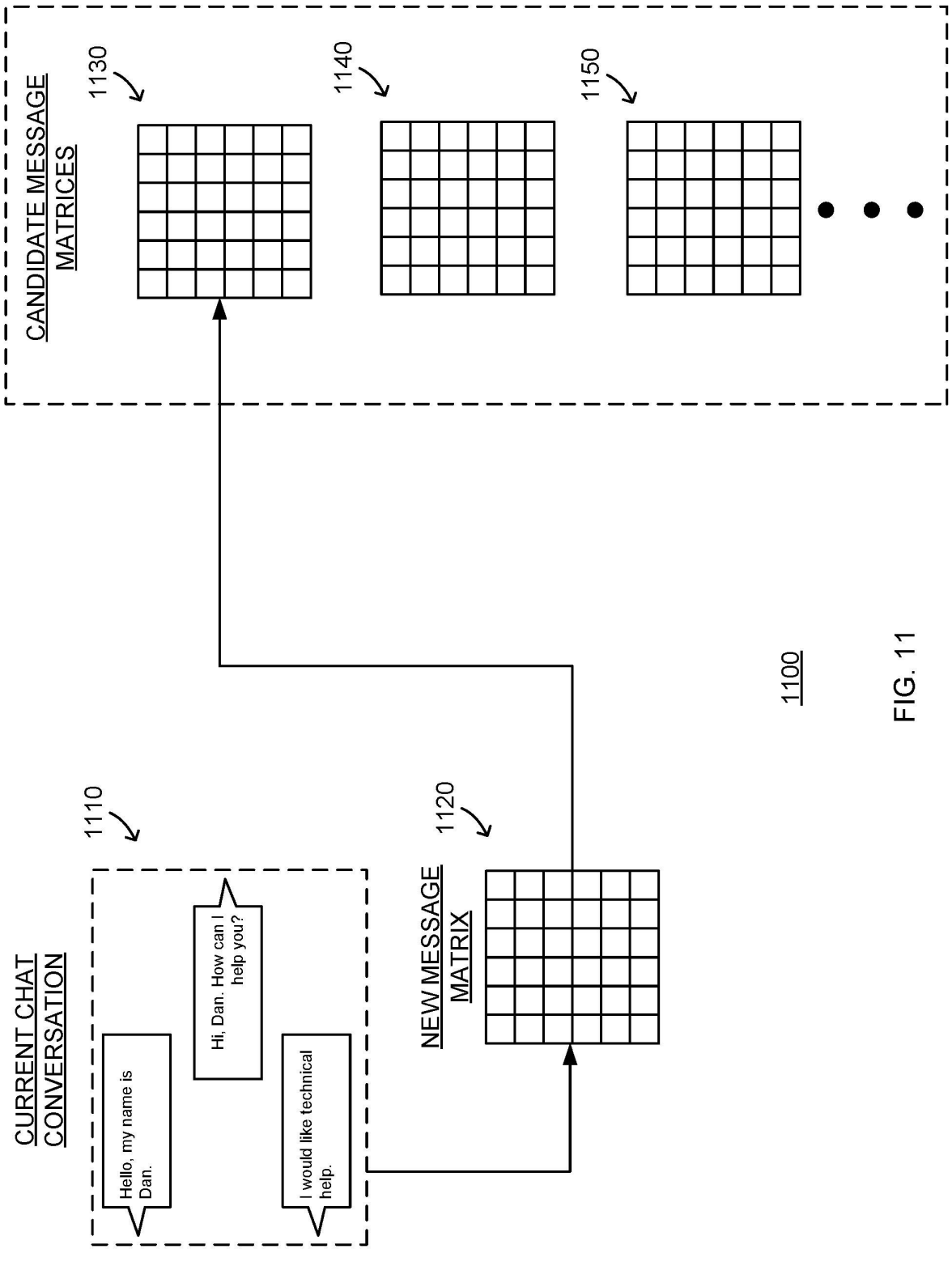
CANDIDATE MESSAGE MATRICES
1130
1140
1150
CURRENT CHAT CONVERSATION
1110
Hello, my name is Dan.
Hi, Dan. How can I help you?
I would like technical help.
NEW MESSAGE MATRIX
1120
1100

FIG. 11

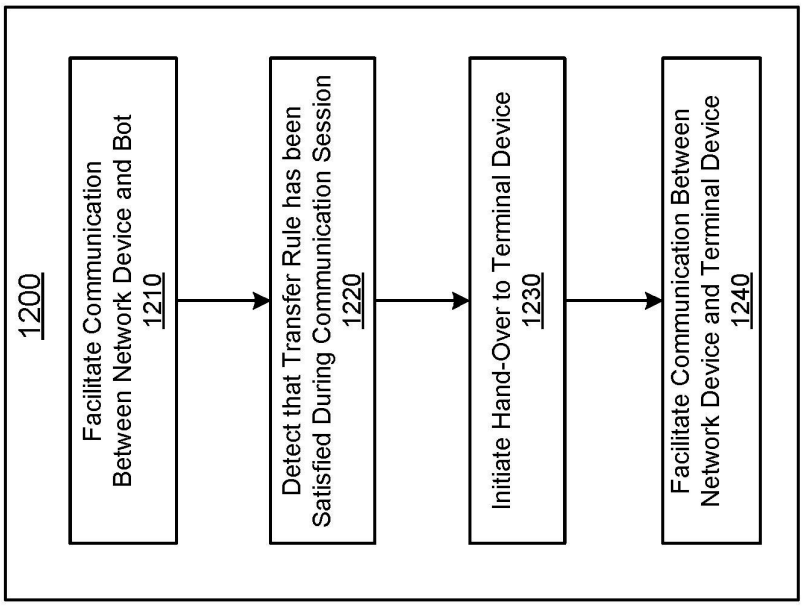
1200
Facilitate Communication Between Network Device and Bot
1210
Detect that Transfer Rule has been Satisfied During Communication Session
1220
Initiate Hand-Over to Terminal Device
1230
Facilitate Communication Between Network Device and Terminal Device
1240

FIG. 12

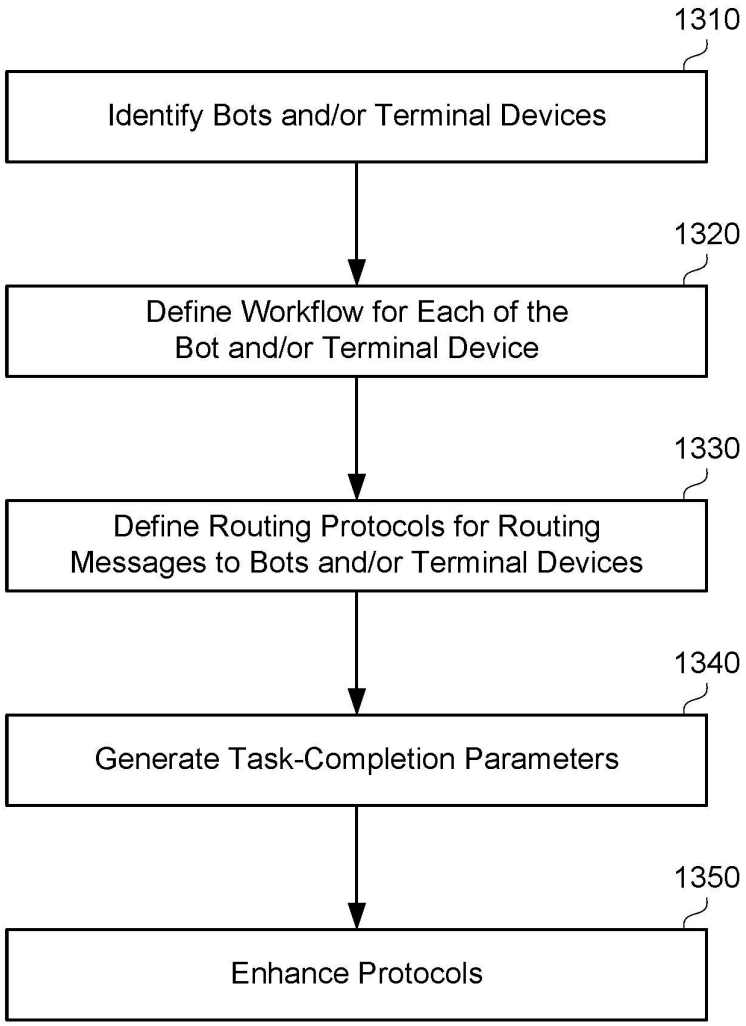
1300
1310
Identify Bots and/or Terminal Devices
1320
Define Workflow for Each of the Bot and/or Terminal Device
1330
Define Routing Protocols for Routing Messages to Bots and/or Terminal Devices
1340
Generate Task-Completion Parameters
1350
Enhance Protocols

FIG. 13