FIG. 1

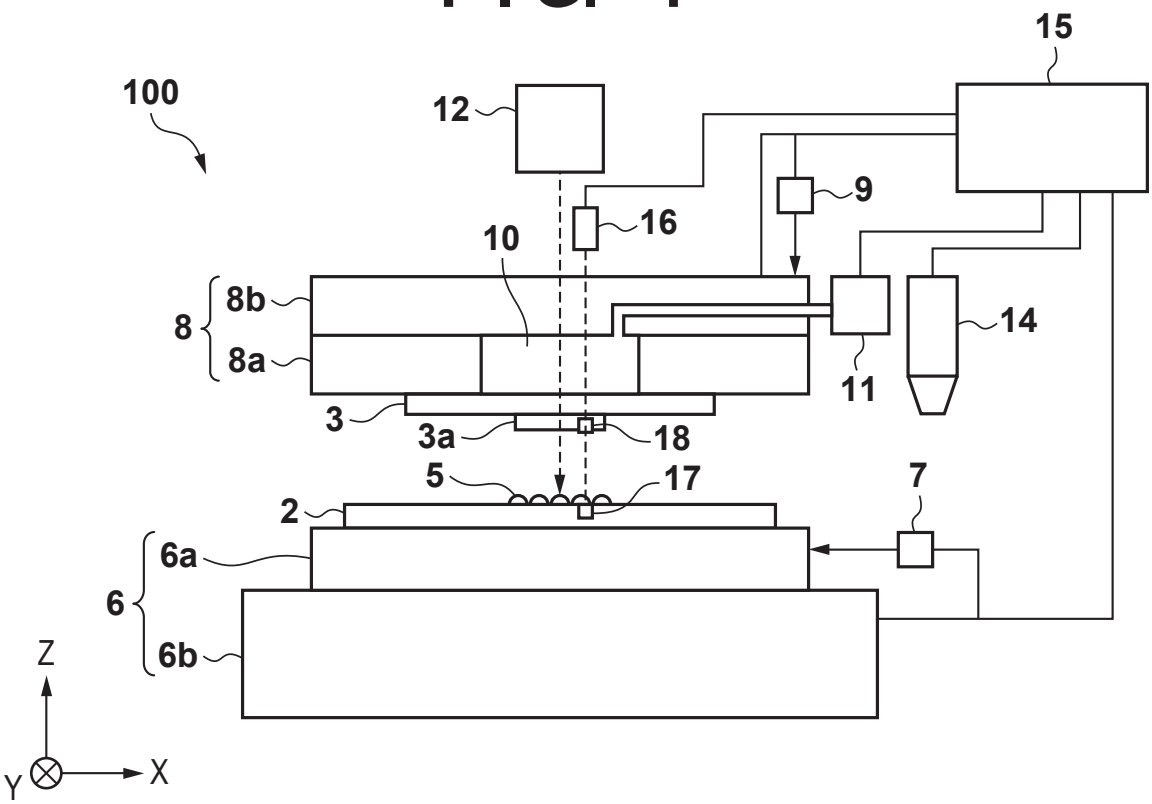
100
12
15
9
16
10
8
8b
8a
14
11
3
3a
18
5
17
7
2
6
6a
6b
Z
Y
X

FIG. 2

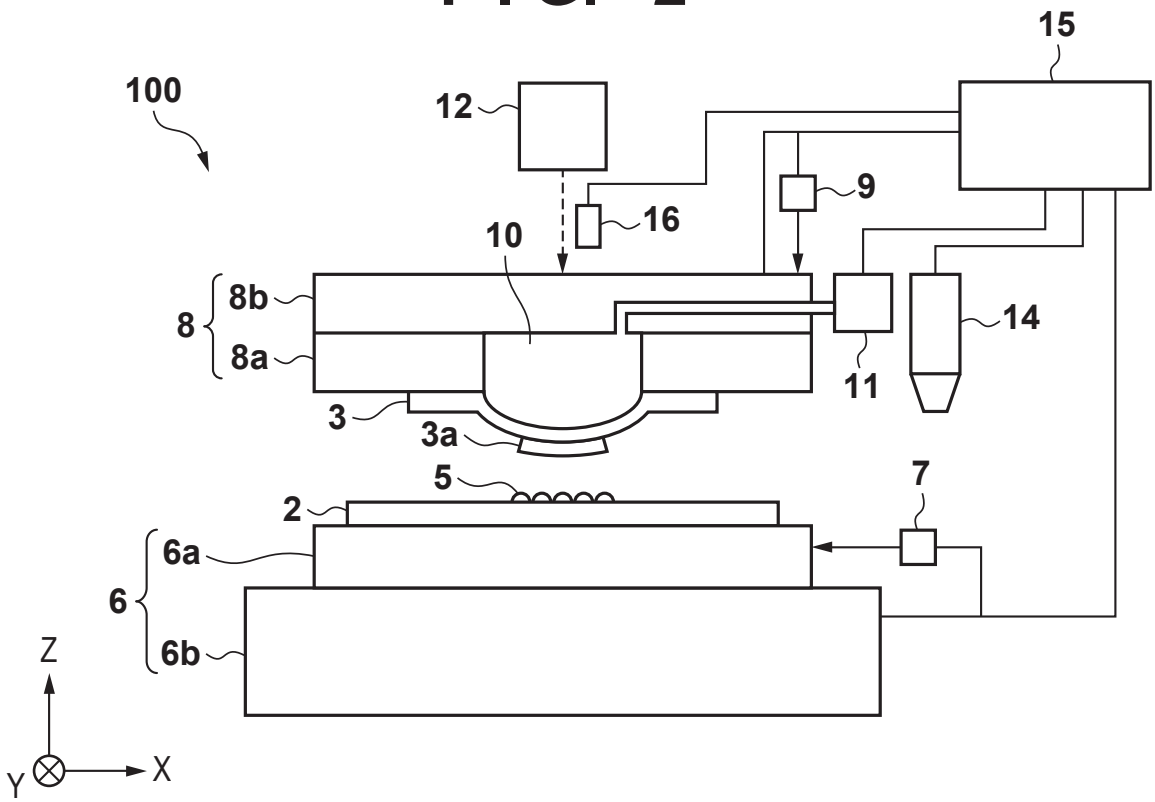
100
12
15
9
16
10
8
8b
8a
14
11
3
3a
5
7
2
6
6a
6b
Z
Y
X

FIG. 3

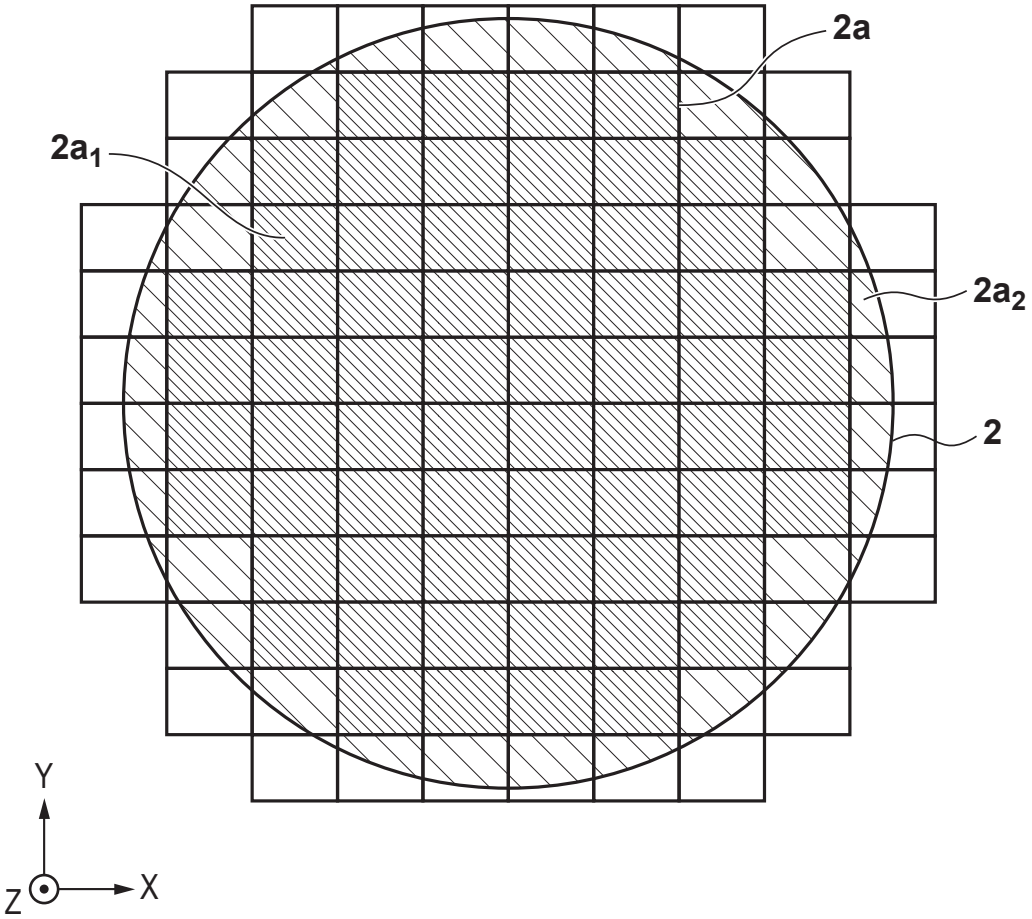

FIG. 4

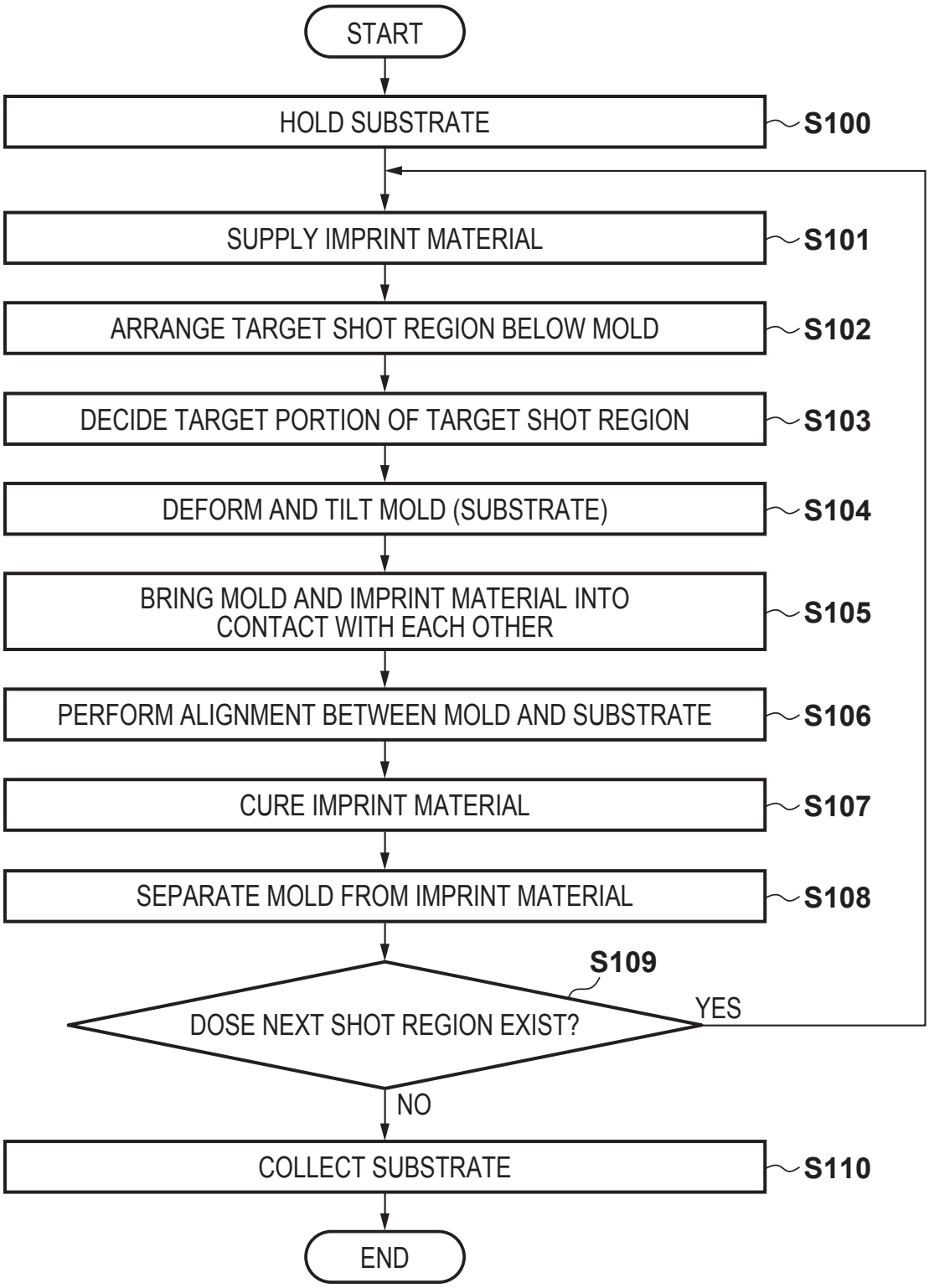
START
HOLD SUBSTRATE
S100
SUPPLY IMPRINT MATERIAL
S101
ARRANGE TARGET SHOT REGION BELOW MOLD
S102
DECIDE TARGET PORTION OF TARGET SHOT REGION
S103
DEFORM AND TILT MOLD (SUBSTRATE)
S104
BRING MOLD AND IMPRINT MATERIAL INTO CONTACT WITH EACH OTHER
S105
PERFORM ALIGNMENT BETWEEN MOLD AND SUBSTRATE
S106
CURE IMPRINT MATERIAL
S107
SEPARATE MOLD FROM IMPRINT MATERIAL
S108
S109
DOSE NEXT SHOT REGION EXIST?
YES
NO
COLLECT SUBSTRATE
S110
END

FIG. 5

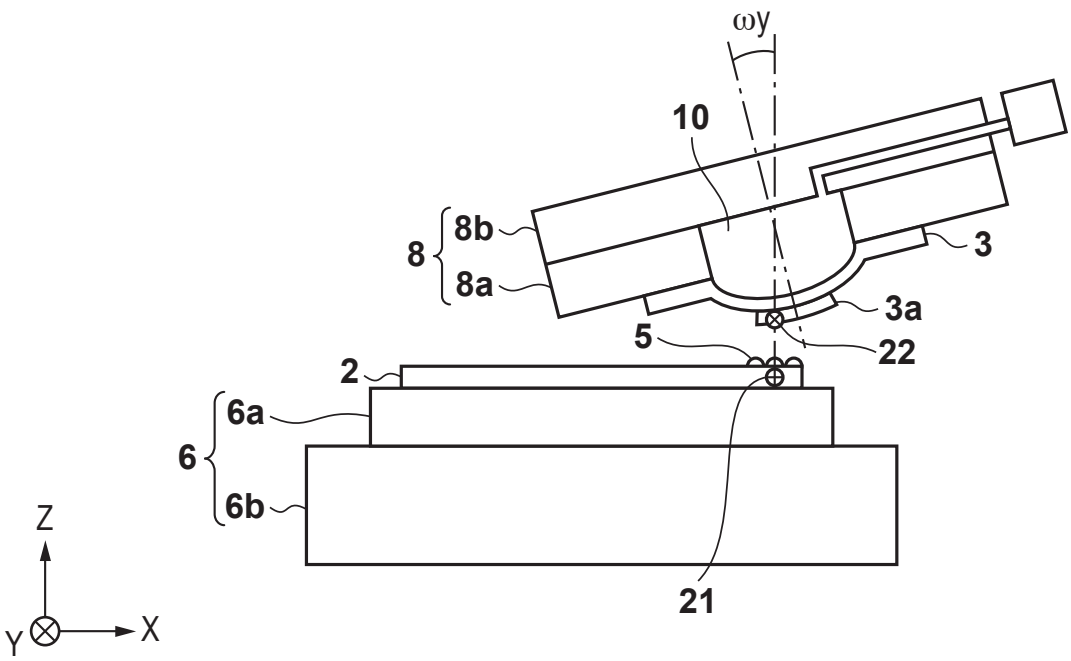

FIG. 6

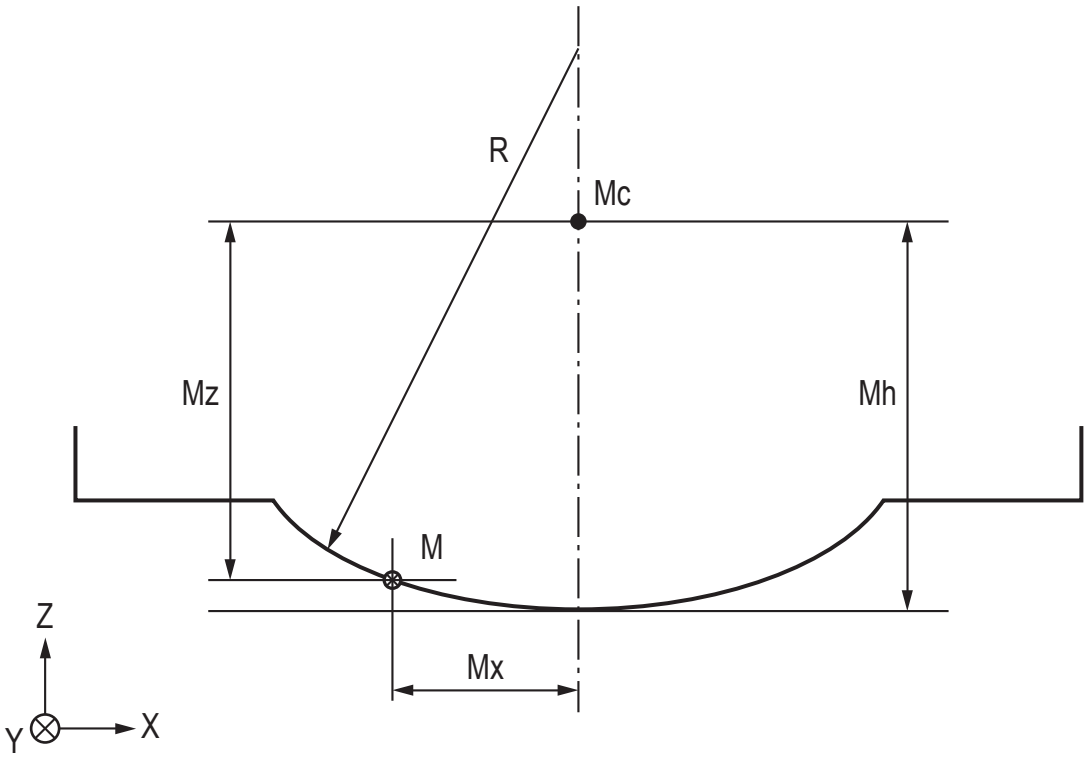

FIG. 7

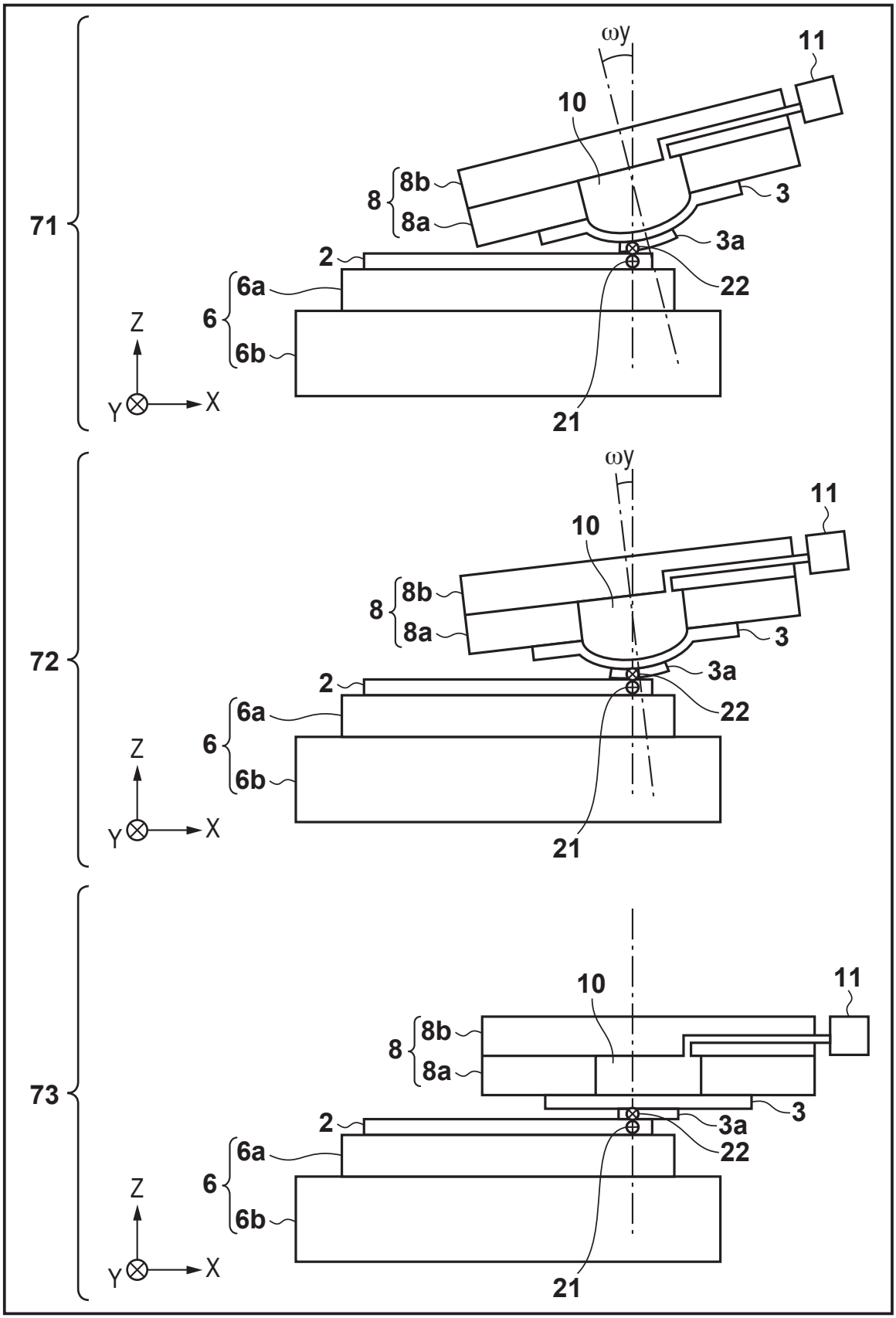

FIG. 8

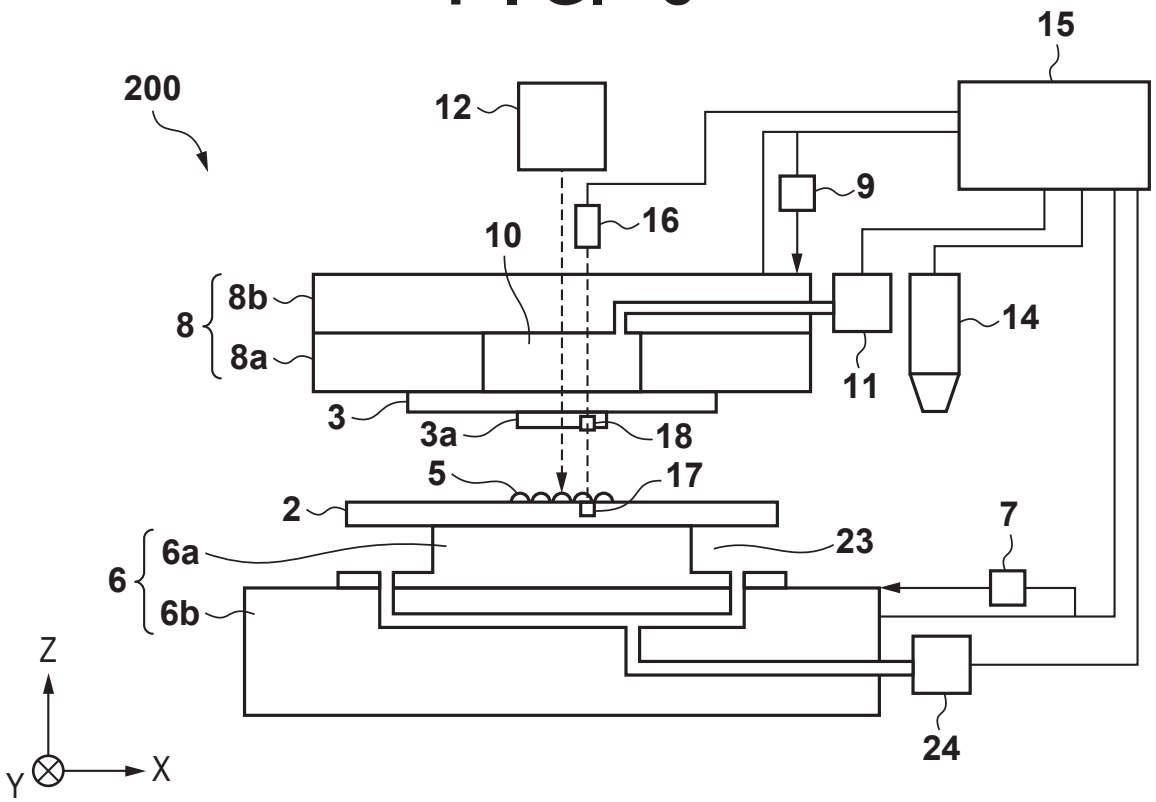
200
12
15
9
16
10
8
8b
8a
14
11
3
3a
18
5
17
2
7
23
6
6a
6b
24
Z
Y
X

FIG. 9

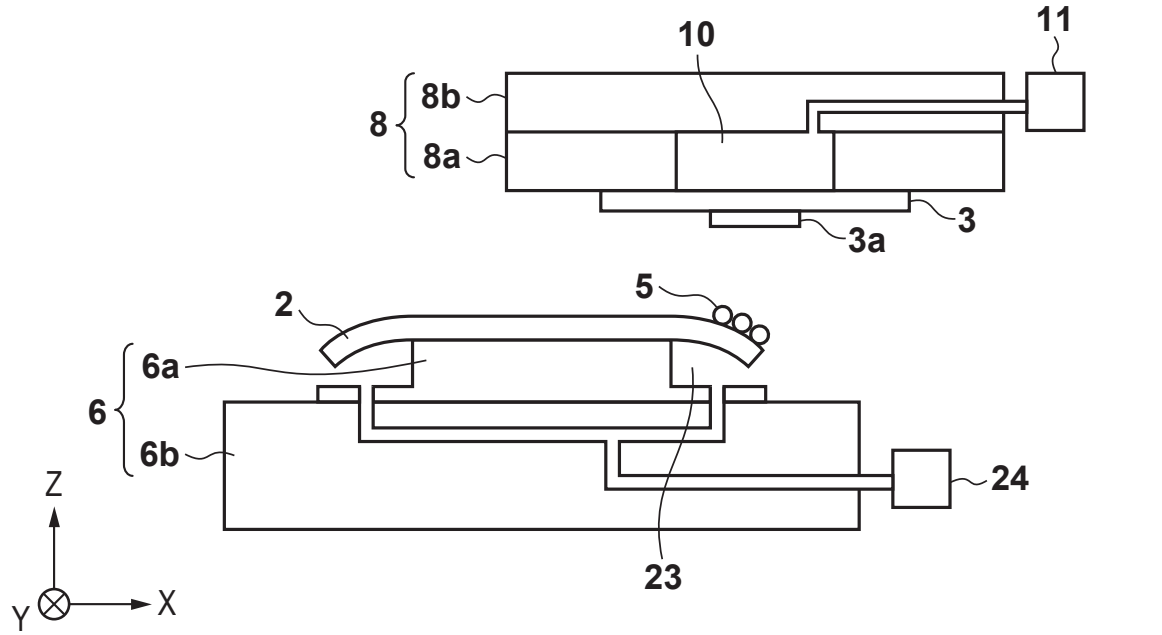
10
11
8
8b
8a
3
3a
2
5
6
6a
6b
24
23
Z
Y
X

FIG. 10

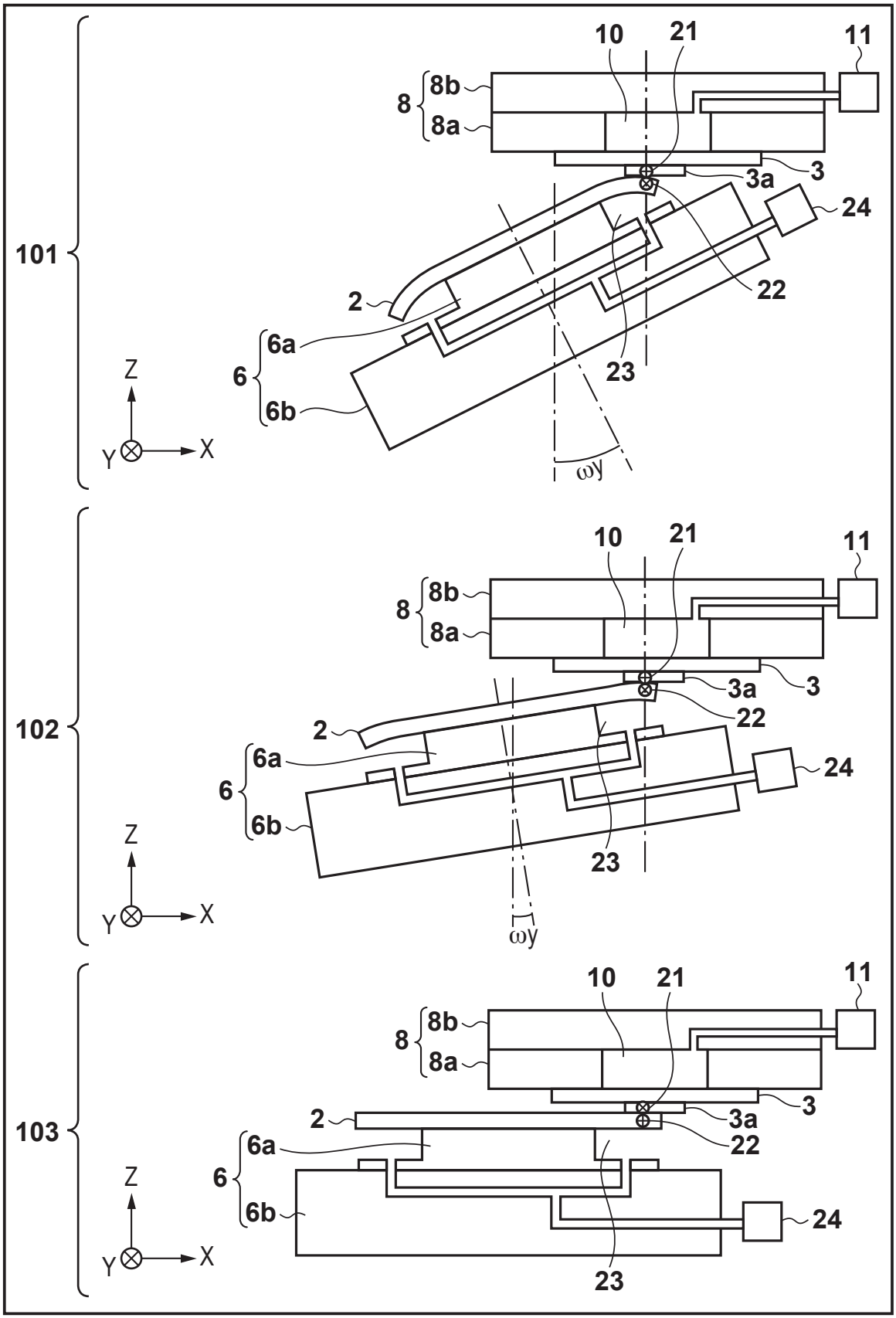

FIG. 11

