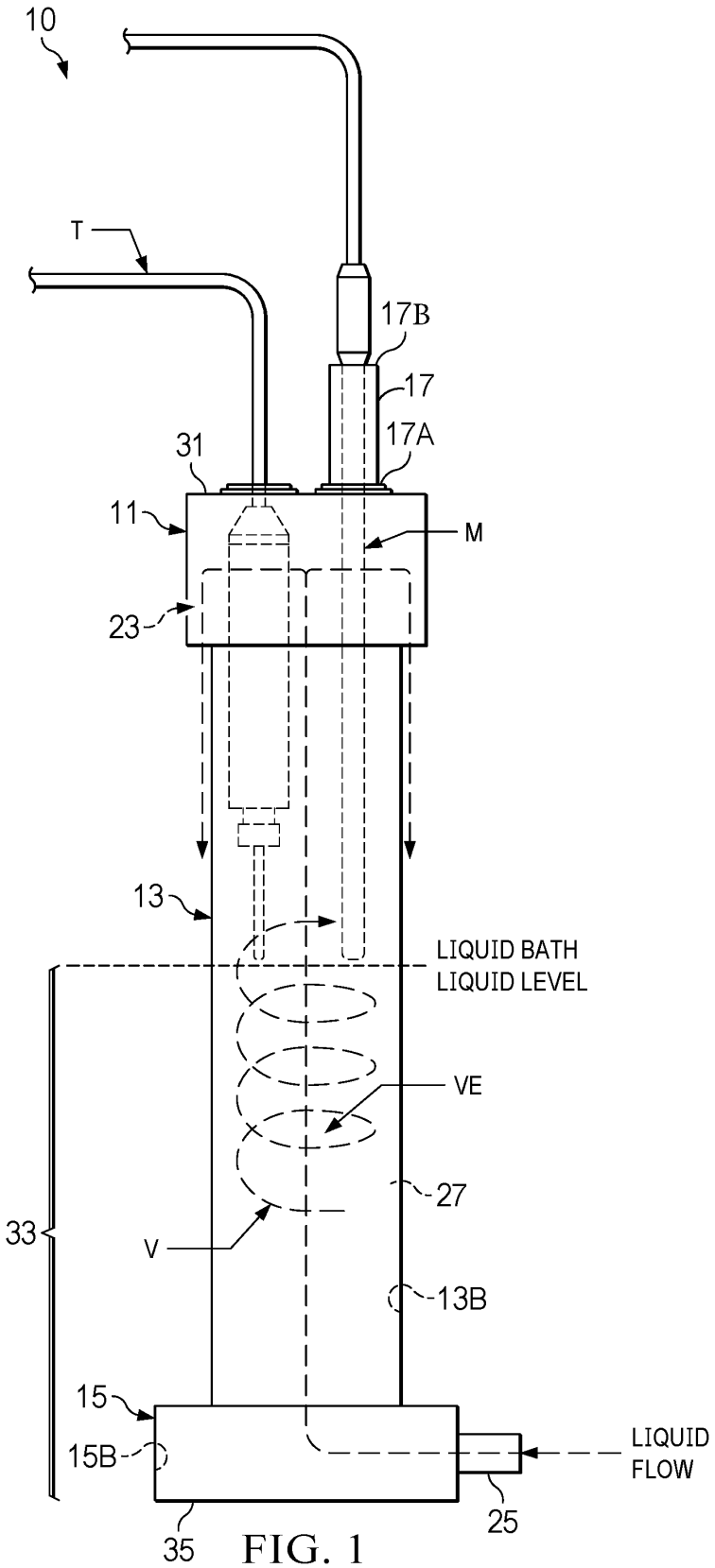
10
T
17B
17
17A
31
11
M
23
13
LIQUID BATH
LIQUID LEVEL
VE
27
33
V
13B
15
15B
LIQUID
FLOW
25
35

FIG. 1

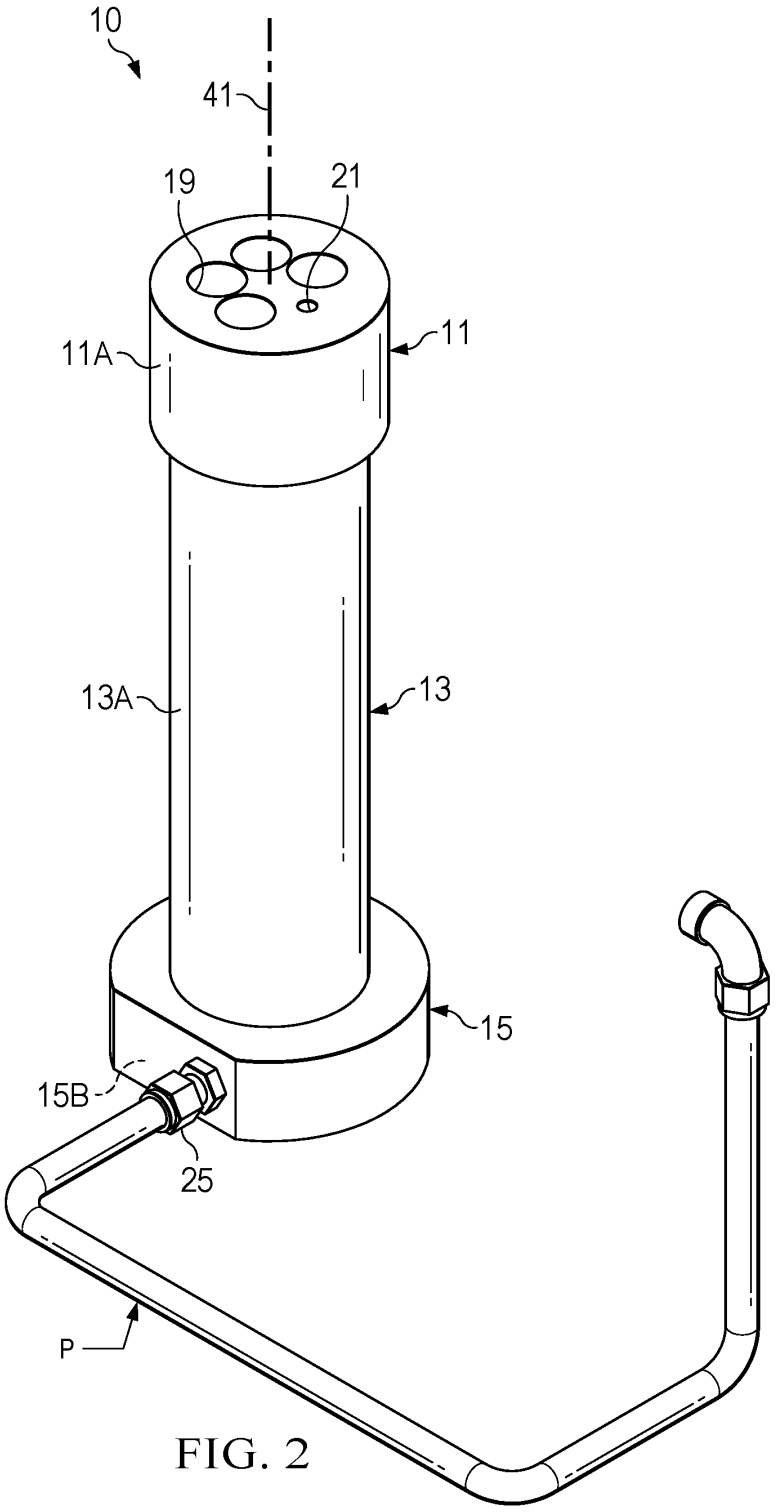

FIG. 2

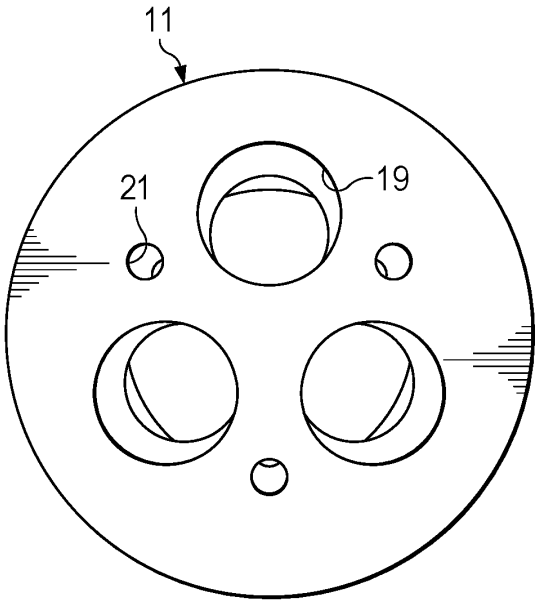

FIG. 3

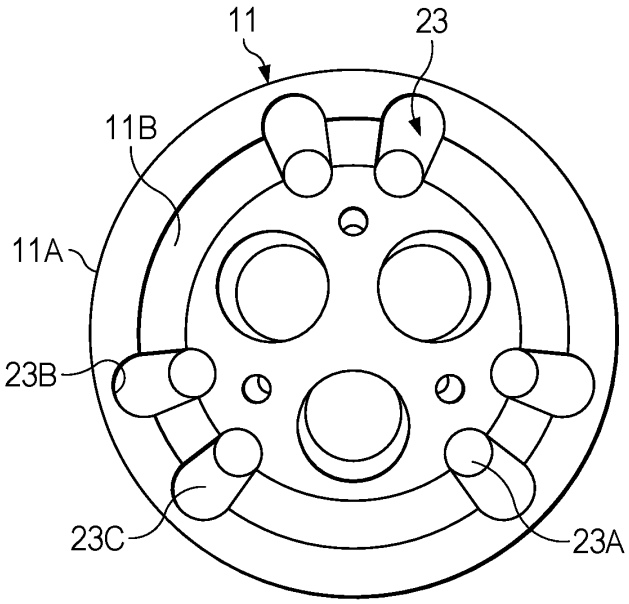

FIG. 4