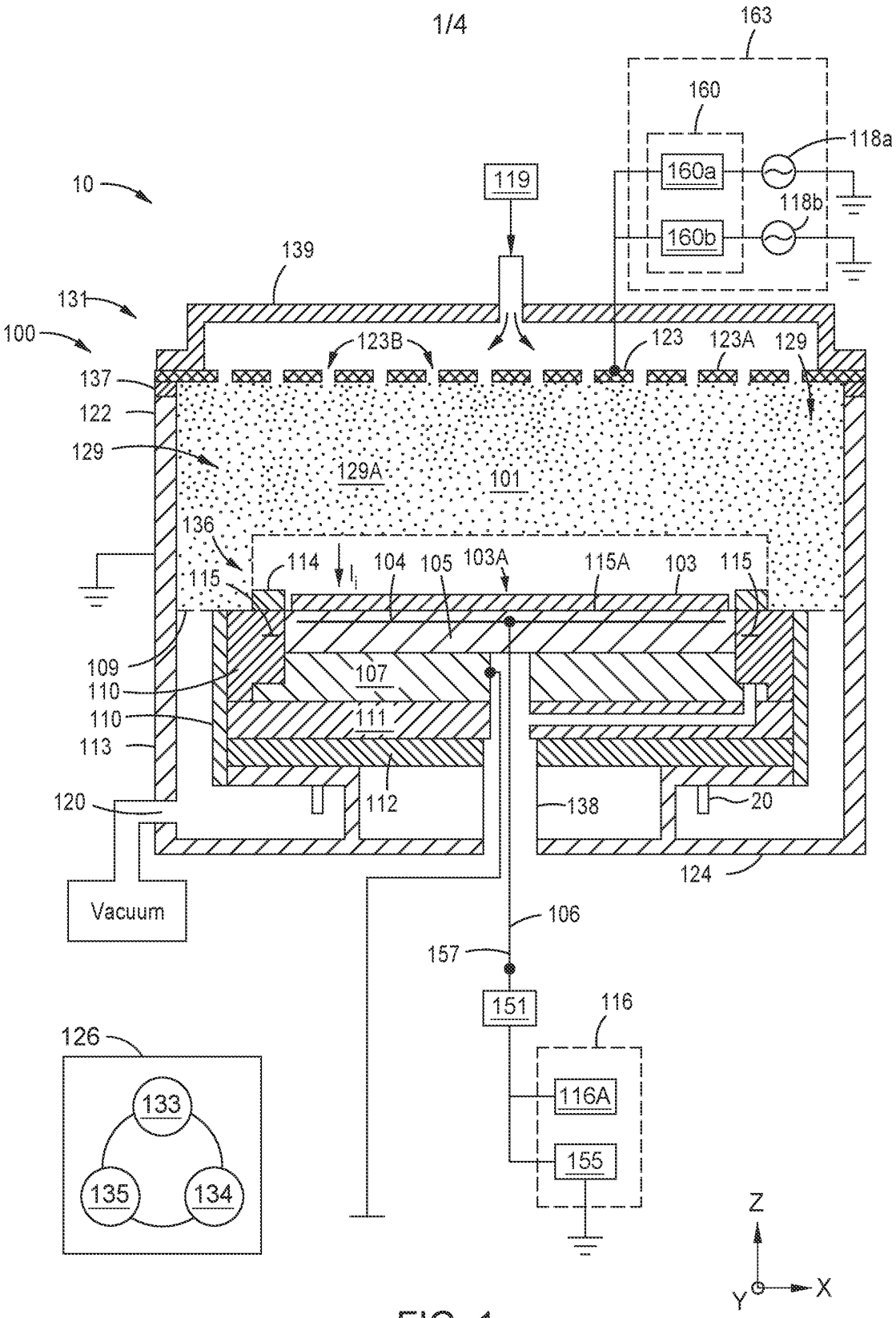
163
160
160a
160b
118a
118b
119
10
139
131
100
123B
123
123A
129
137
122
129
129A
101
136
114
104
105
103A
115A
103
115
115
109
107
110
111
110
113
112
138
20
120
124
Vacuum
106
157
151
116
116A
155
126
133
135
134
Z
Y
X

FIG. 1

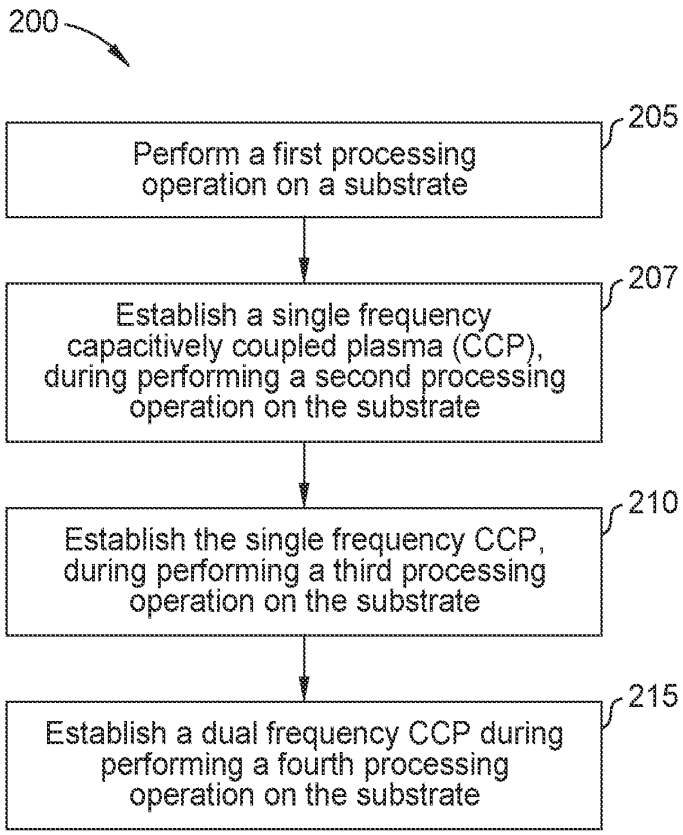
200
Perform a first processing operation on a substrate
205
Establish a single frequency capacitively coupled plasma (CCP), during performing a second processing operation on the substrate
207
Establish the single frequency CCP, during performing a third processing operation on the substrate
210
Establish a dual frequency CCP during performing a fourth processing operation on the substrate
215

FIG. 2

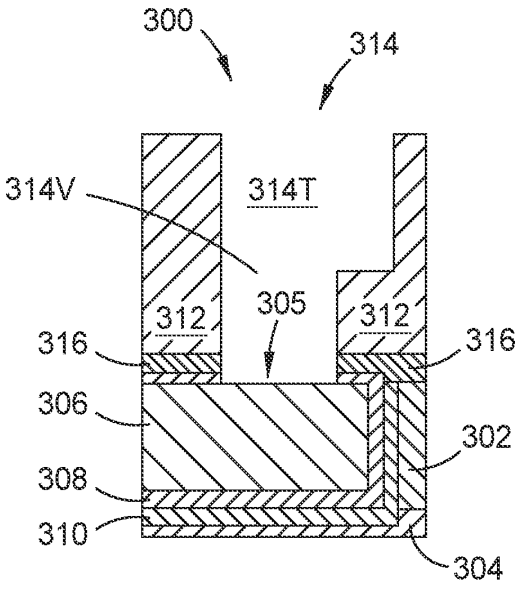

FIG. 3A

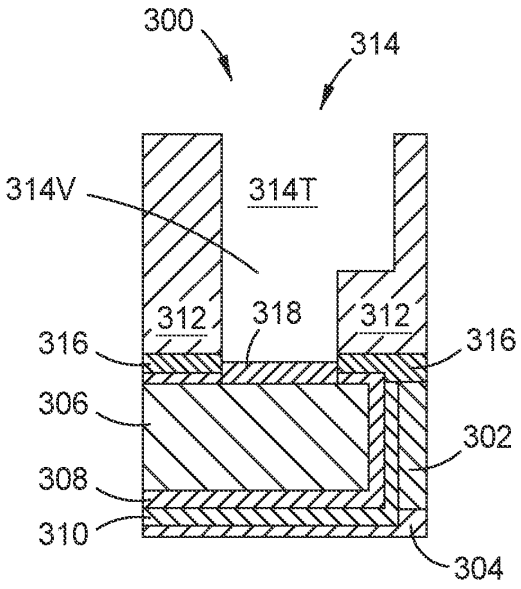

FIG. 3B

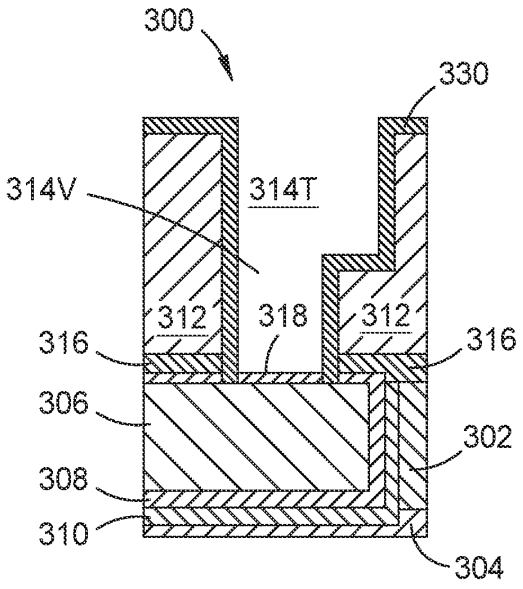

FIG. 3C

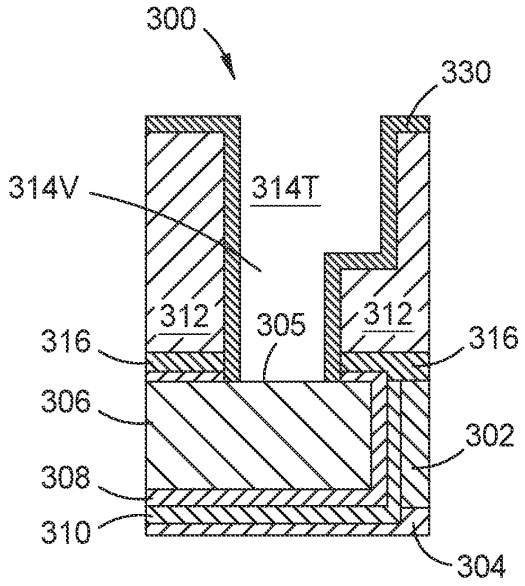
300
330
314V
314T
312
305
312
316
316
306
302
308
310
304

FIG. 3D

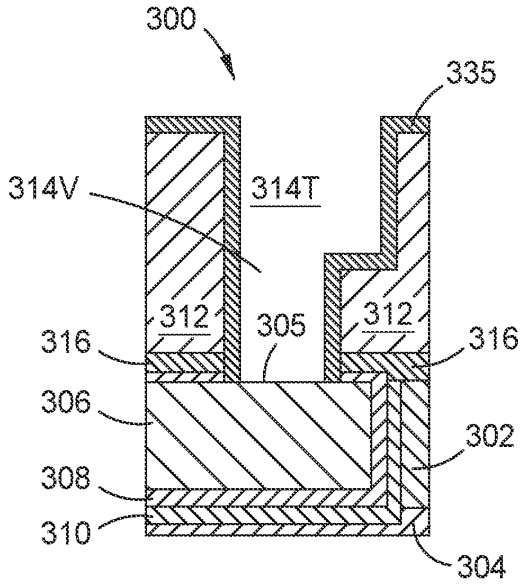
300
335
314V
314T
312
305
312
316
316
306
302
308
310
304

FIG. 3E