FIG.1

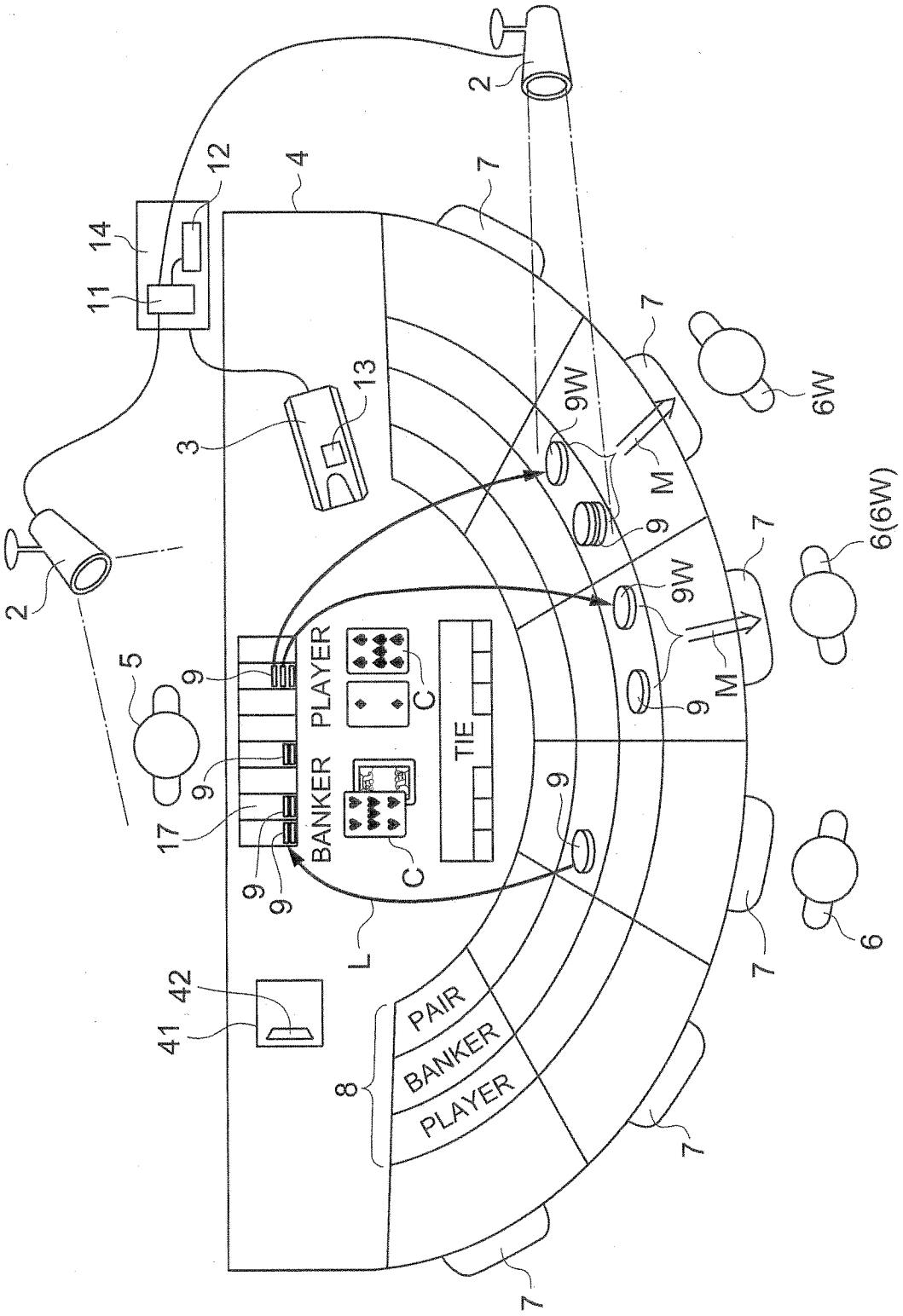
2
2
3
4
5
6
6(6W)
6W
7
8
9
9W
11
12
13
14
17
41
42
L
M
C
BANKER
PLAYER
TIE
PAIR
BANKER
PLAYER

FIG.2A

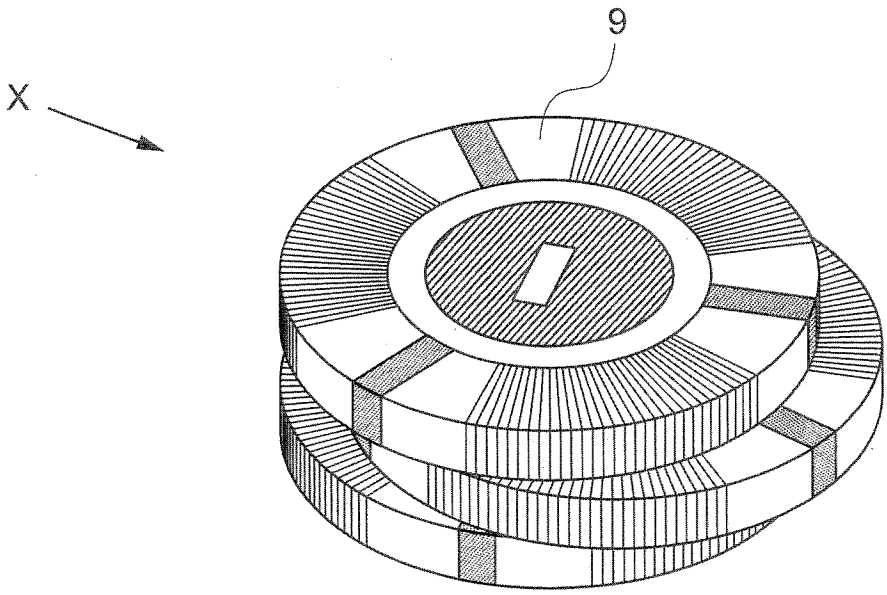

FIG.2B

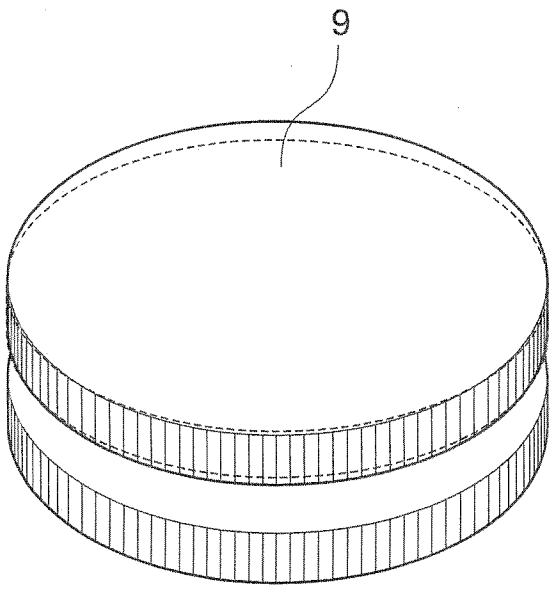

FIG.3A

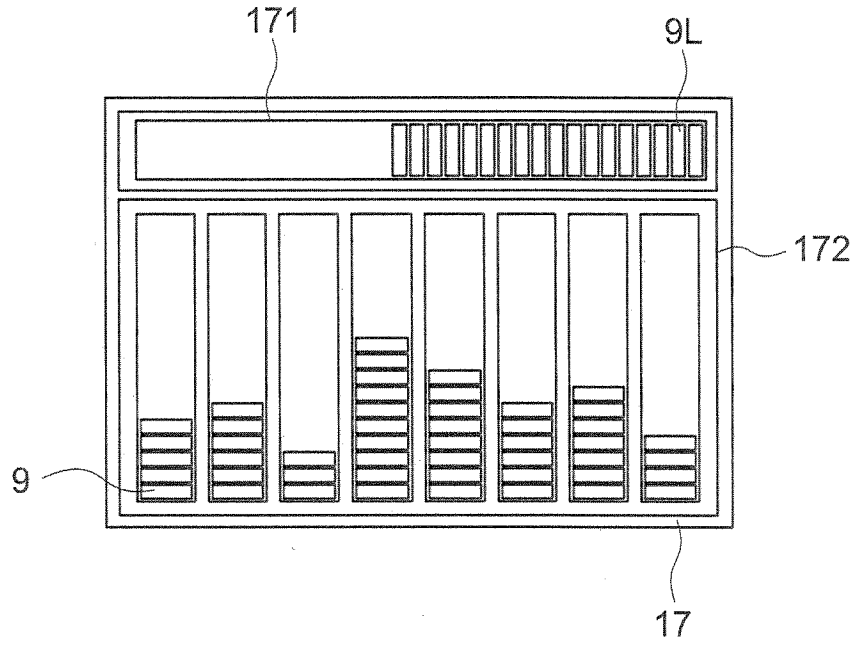

FIG.3B

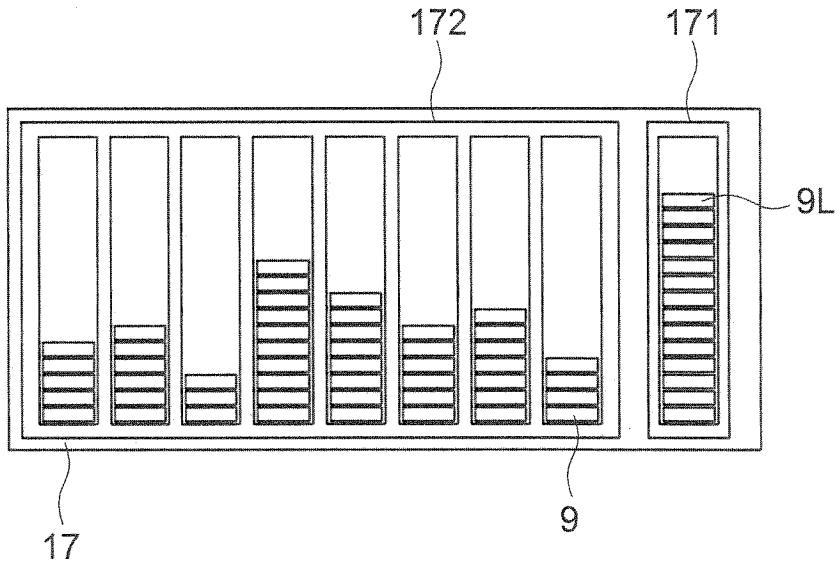

FIG.4



FIG.5A

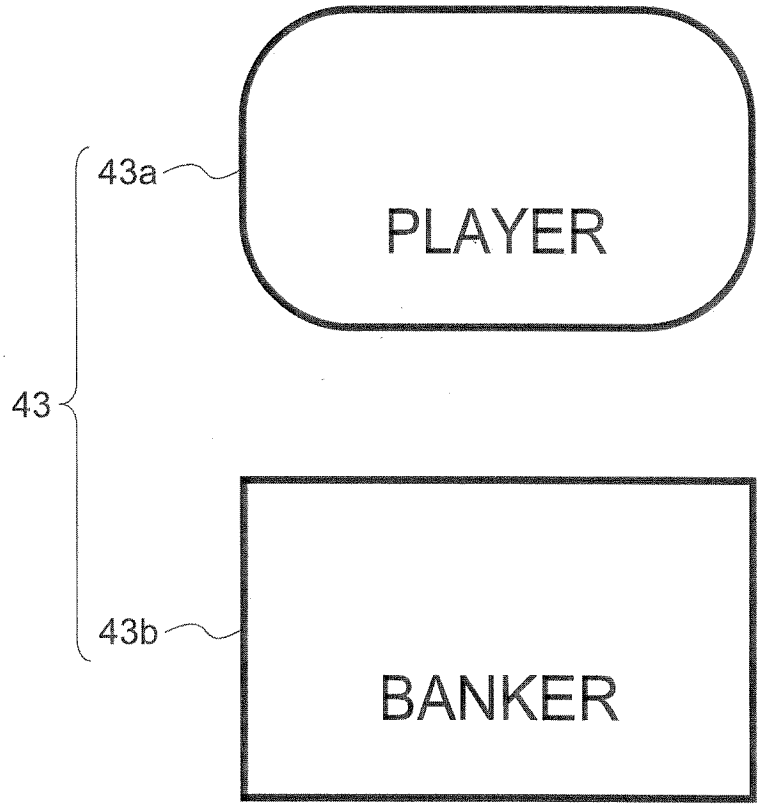

FIG.5B

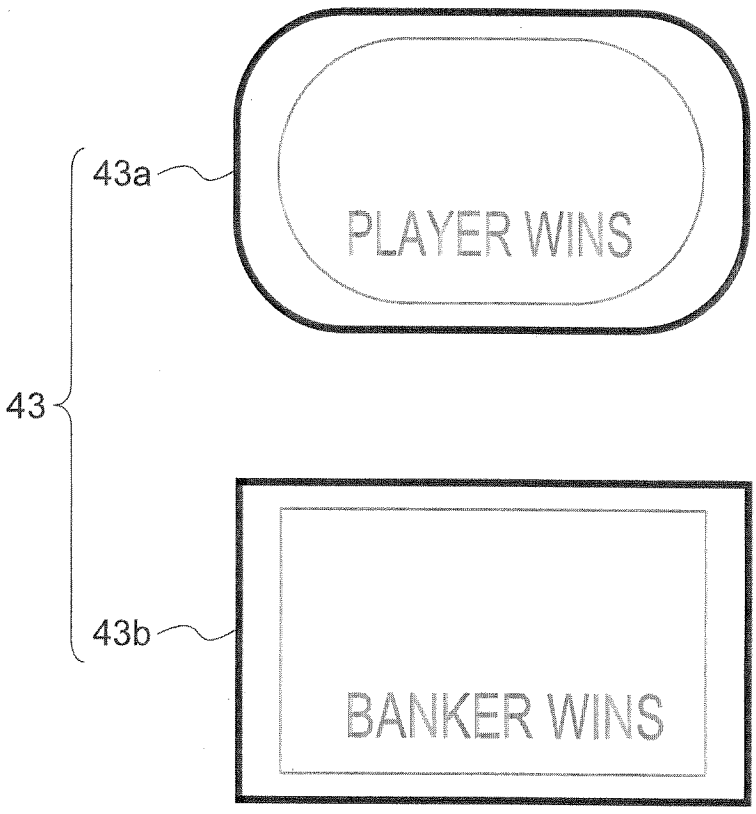

FIG.6

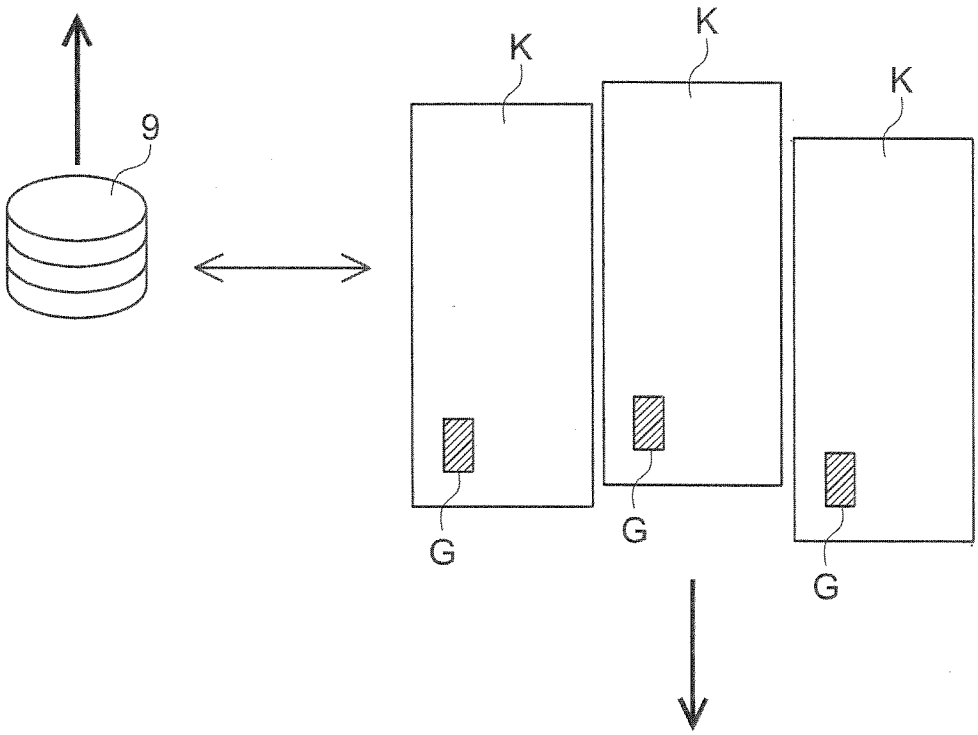

FIG.7

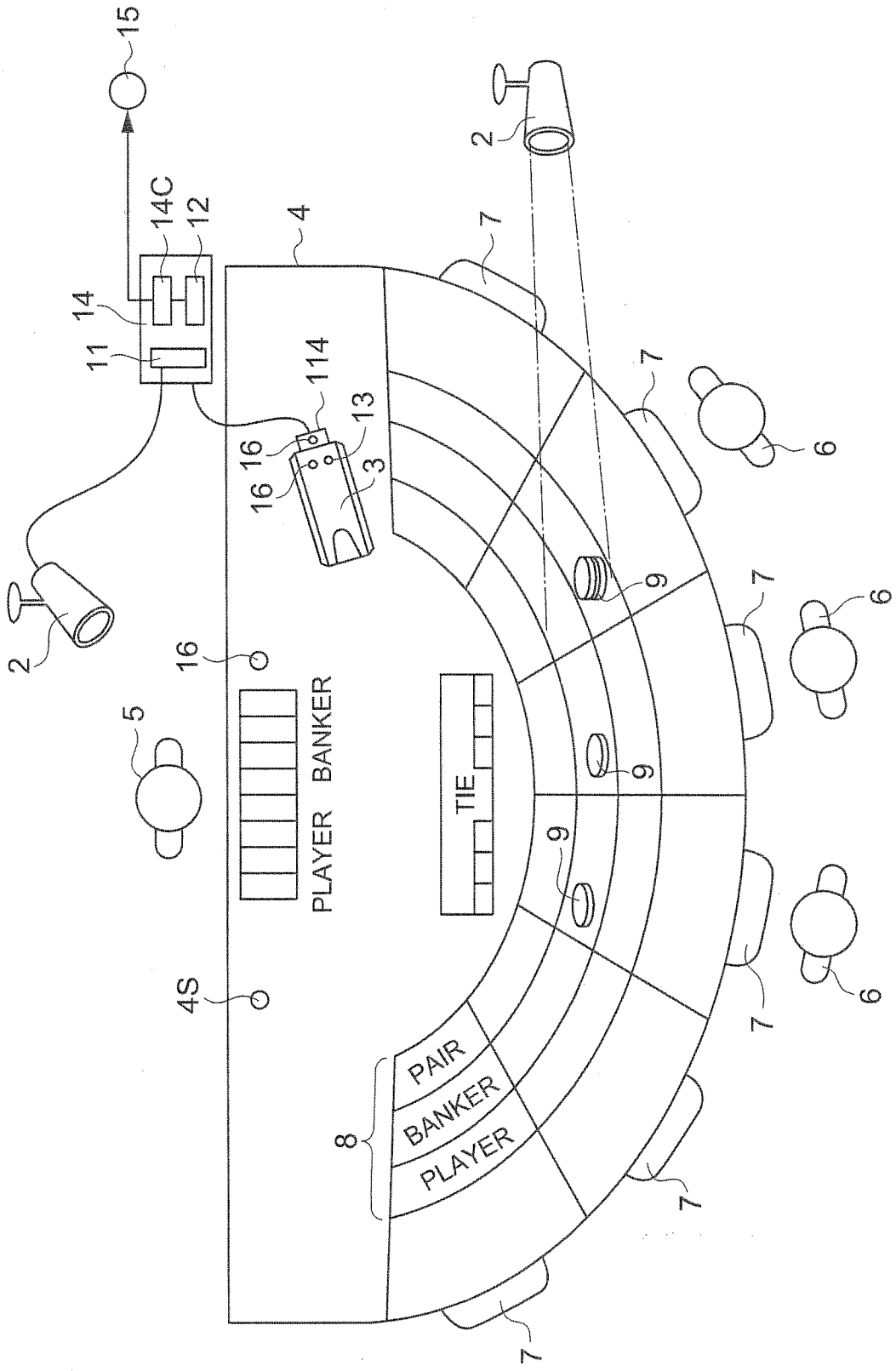
15
14C
12
14
11
4
114
13
16
16
3
2
2
7
7
7
7
7
7
6
6
6
9
9
9
16
5
PLAYER
BANKER
TIE
4S
PAIR
BANKER
PLAYER
8

FIG.8

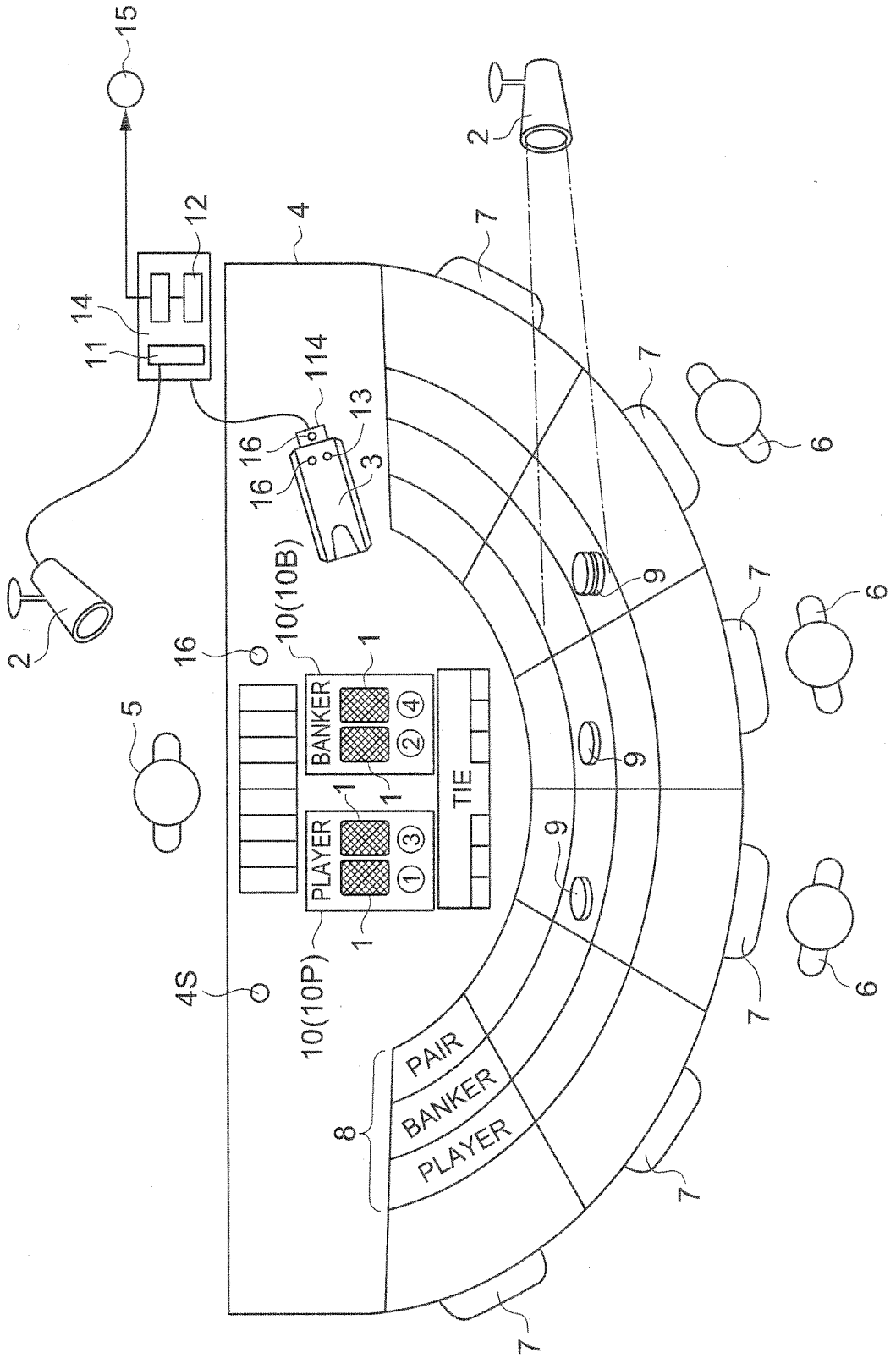
15
12
14
11
4
114
13
16
16
3
2
2
7
7
7
7
7
7
6
6
6
9
9
9
16
10(10B)
1
BANKER
2
4
1
1
PLAYER
1
3
1
TIE
5
4S
10(10P)
PAIR
BANKER
PLAYER
8

FIG.9

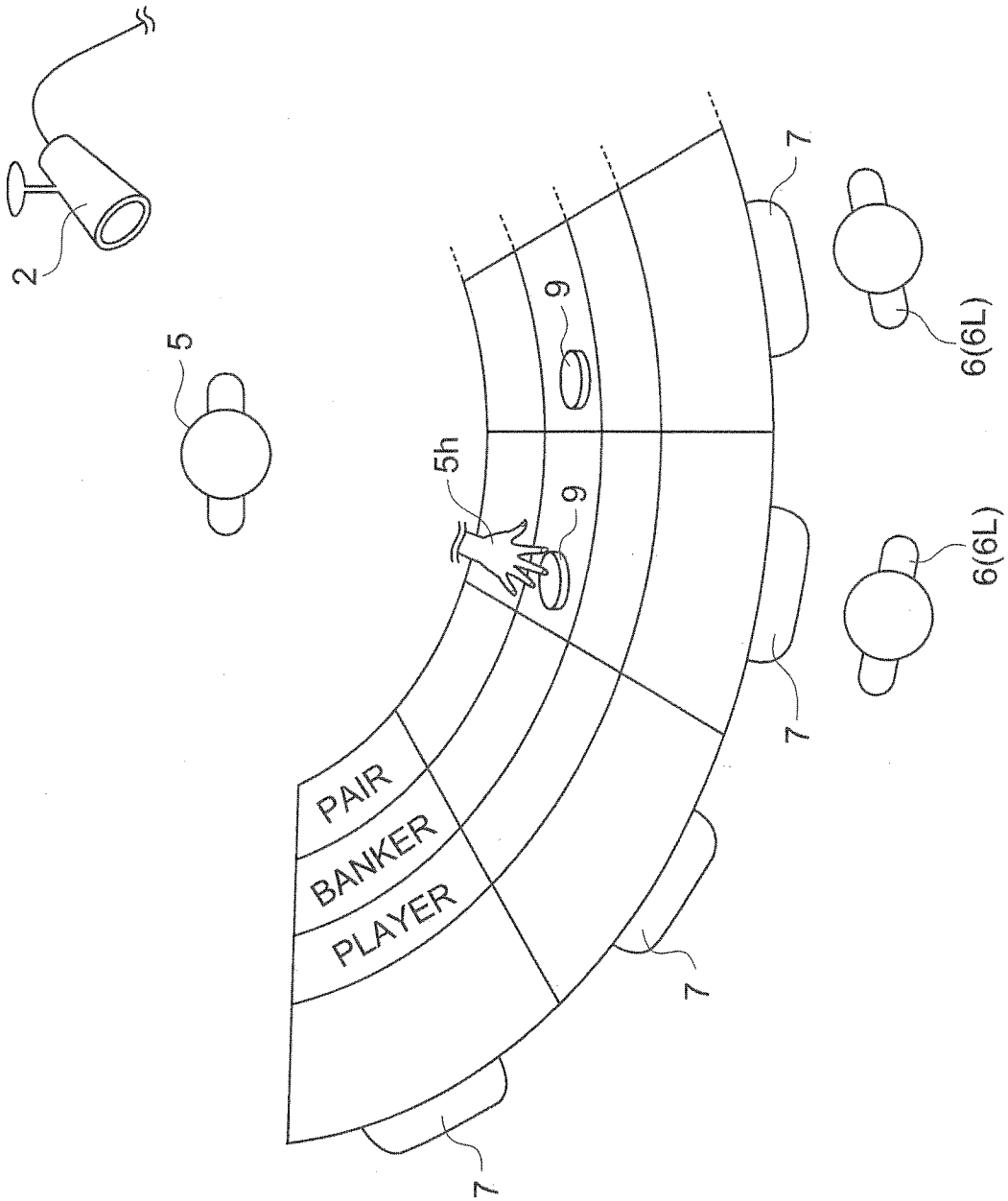

FIG.10

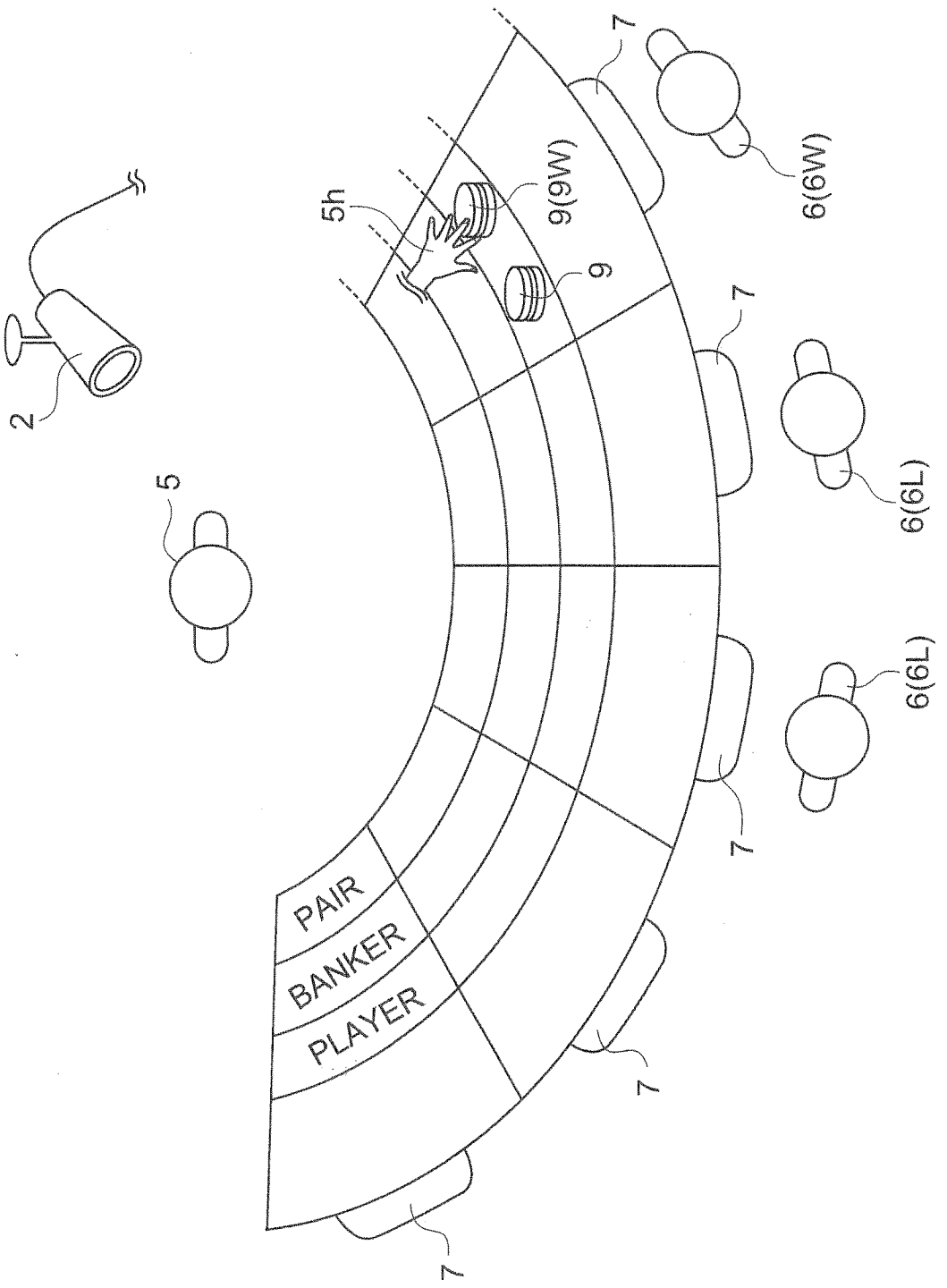

FIG.11

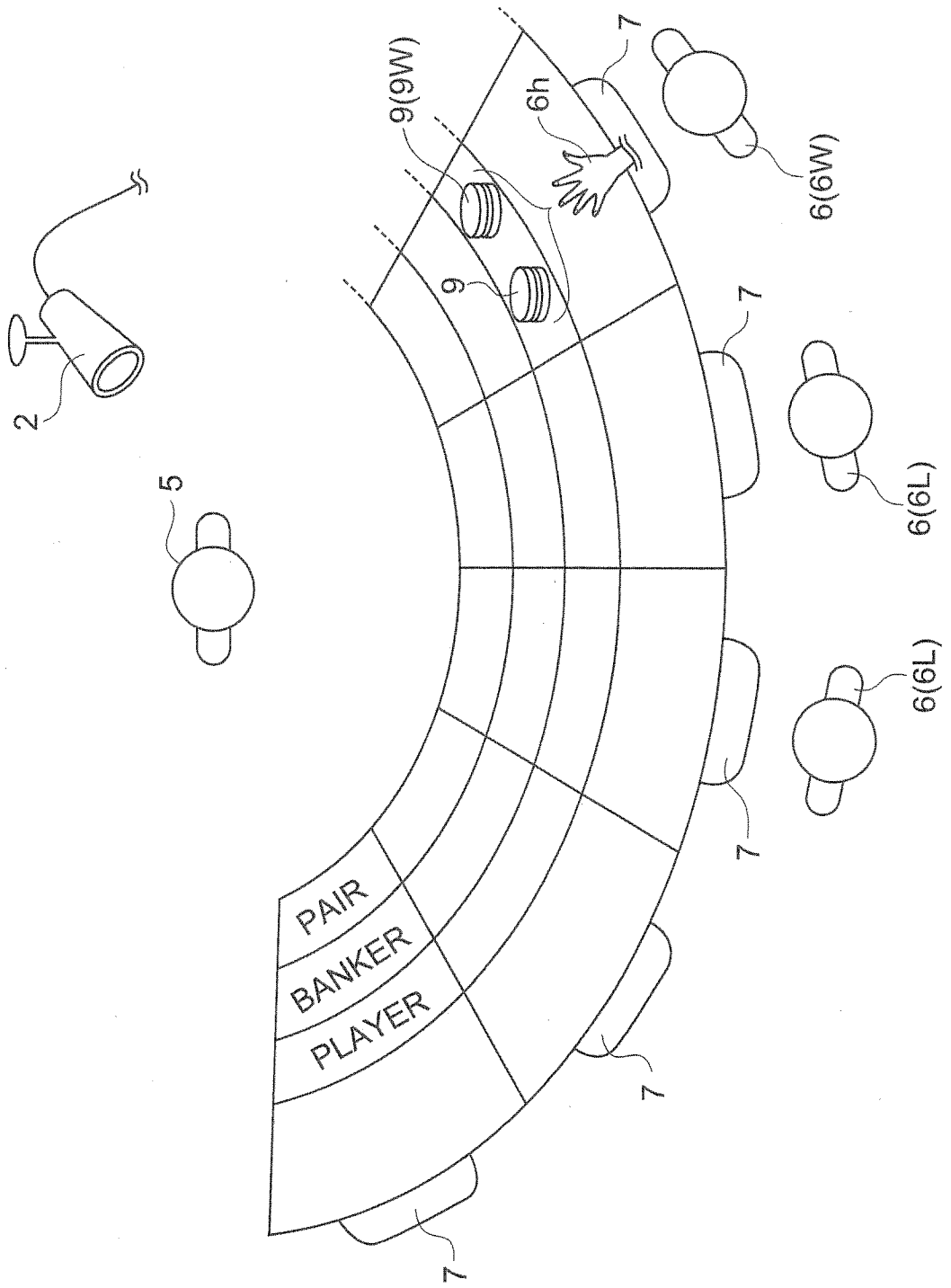

FIG.12A

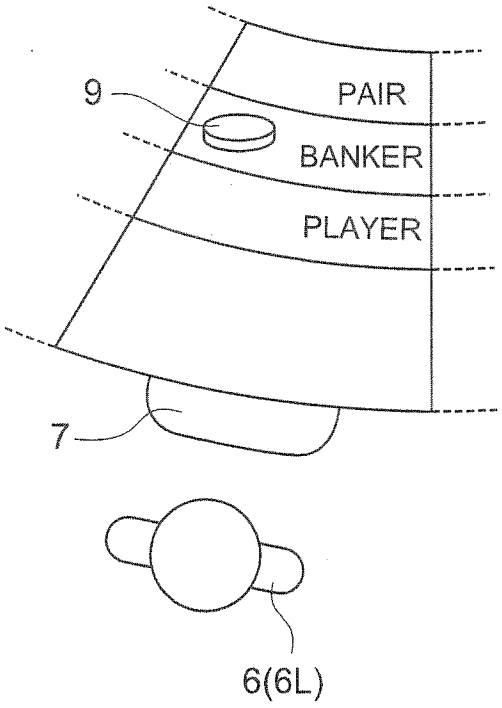

FIG.12B

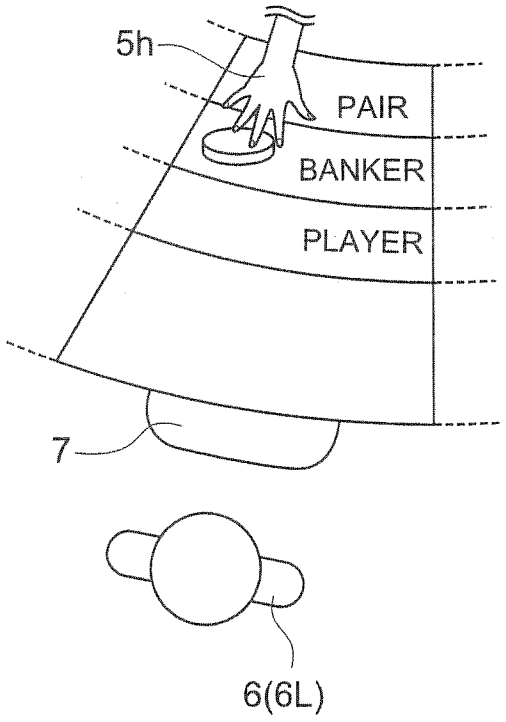

FIG.12C

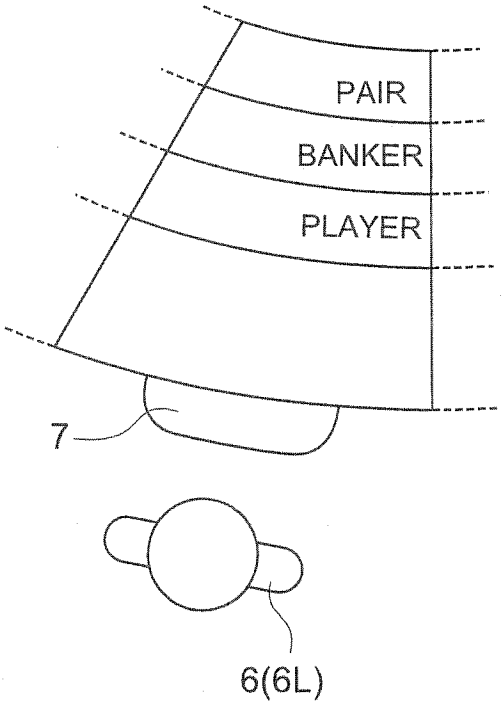

FIG.13

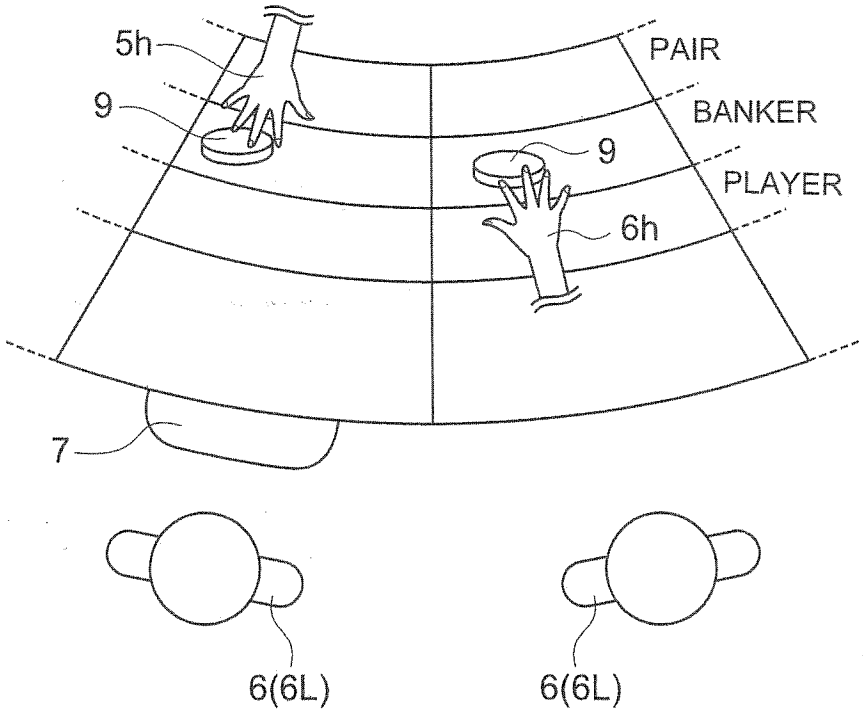

FIG.14A

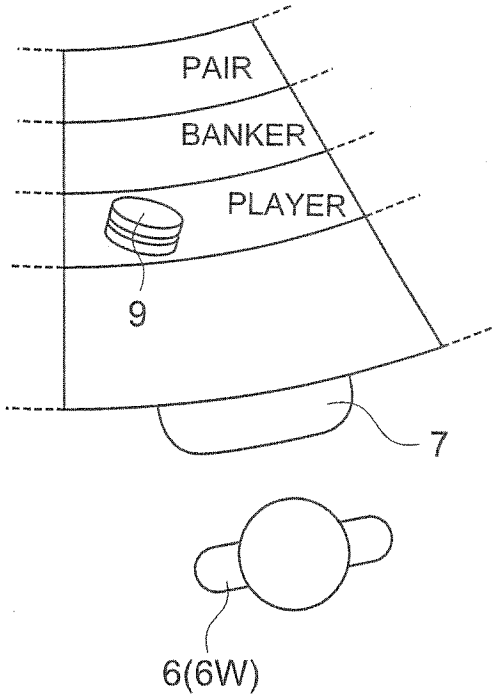

FIG.14B

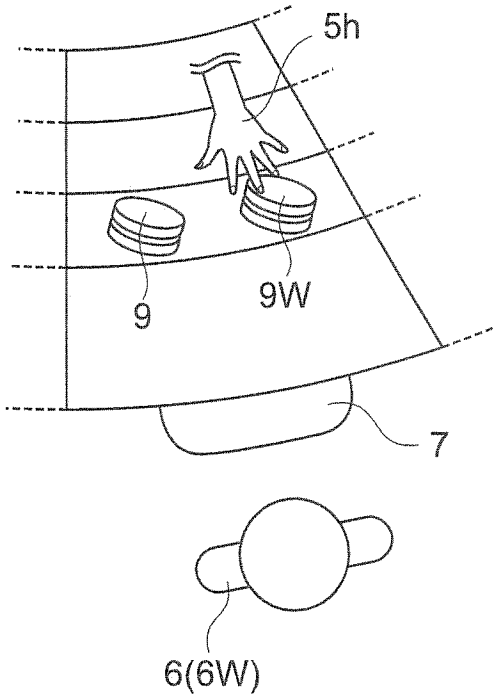

FIG.14C

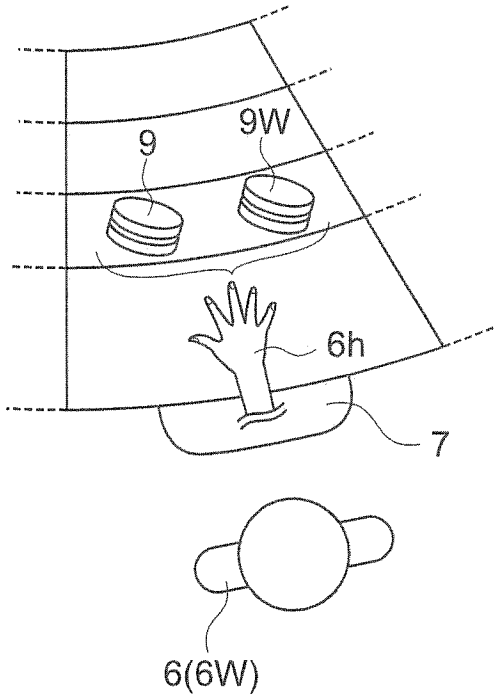

FIG.14D

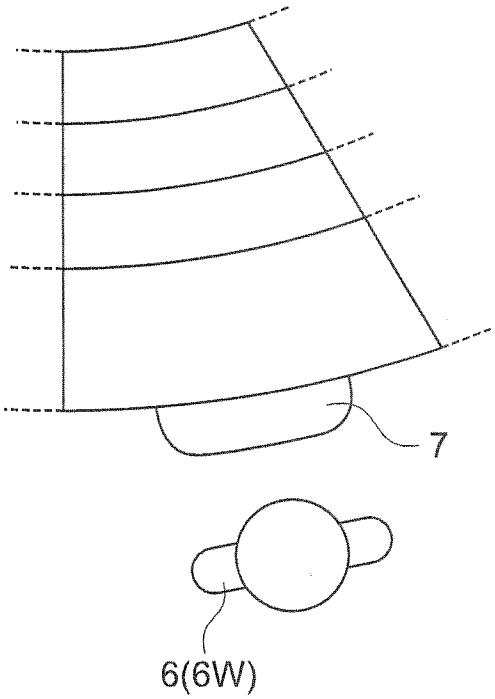

FIG.15

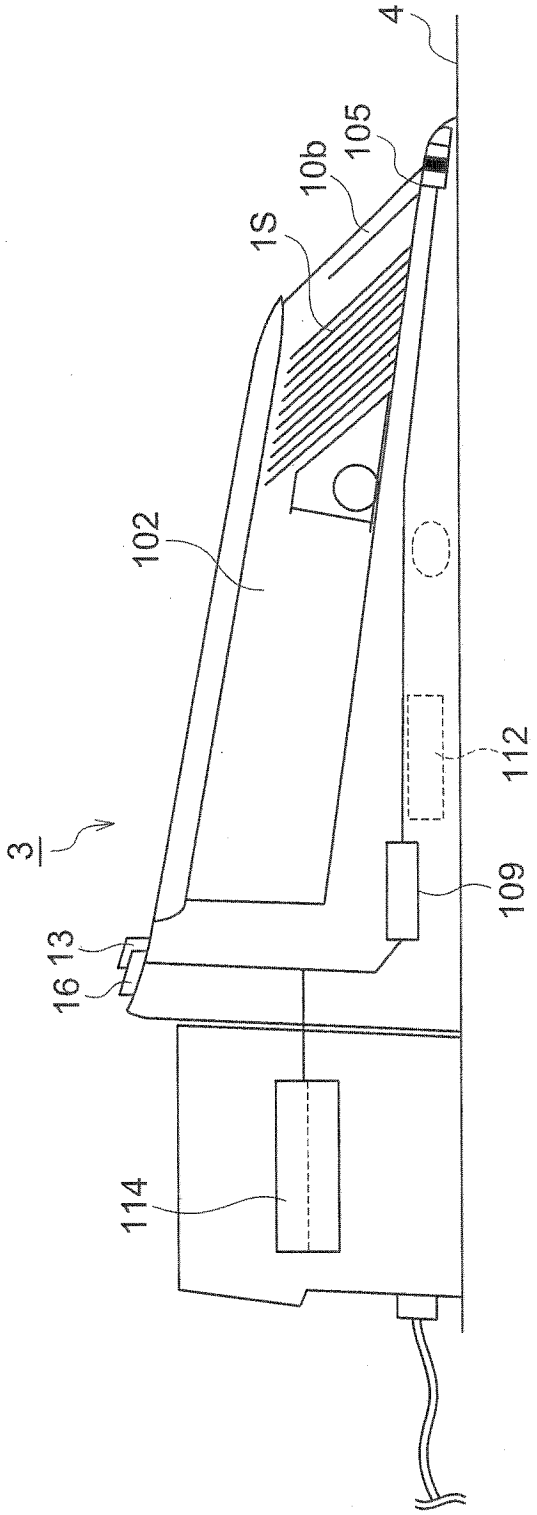

FIG.16

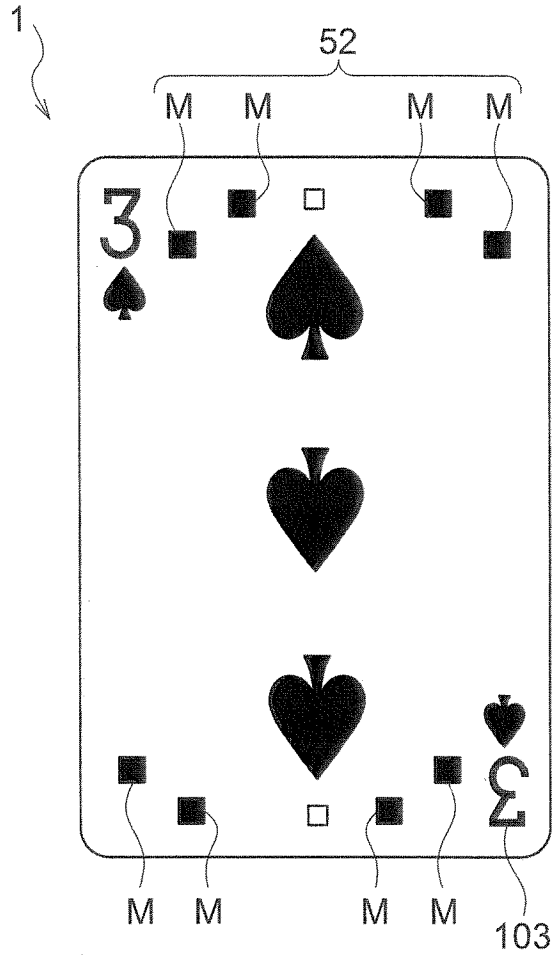

FIG.17

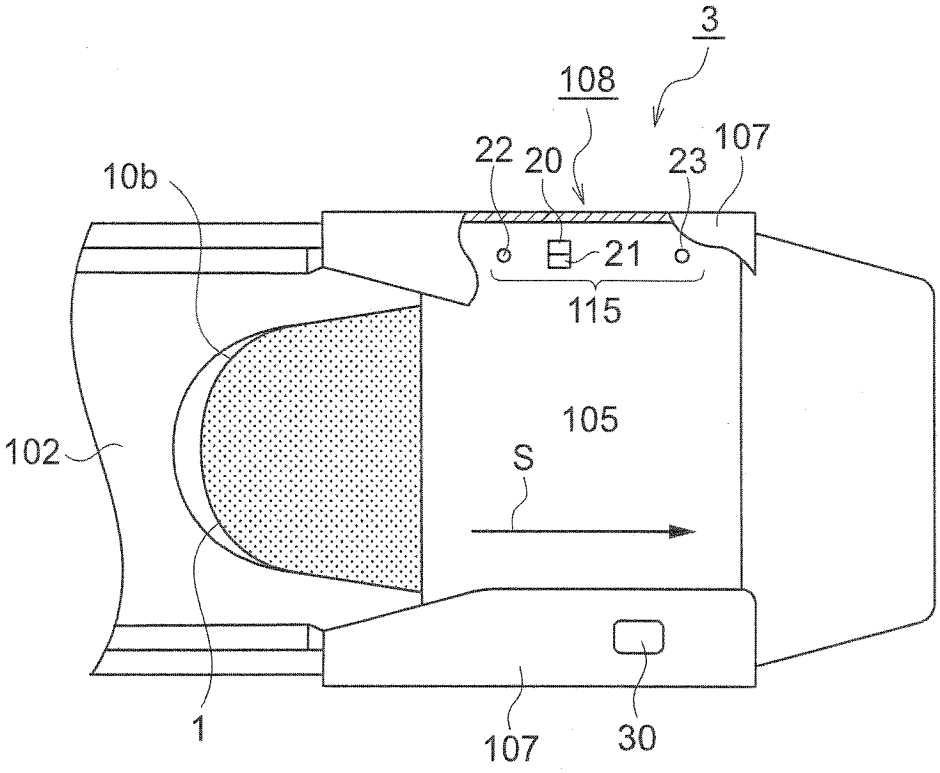

FIG.18A

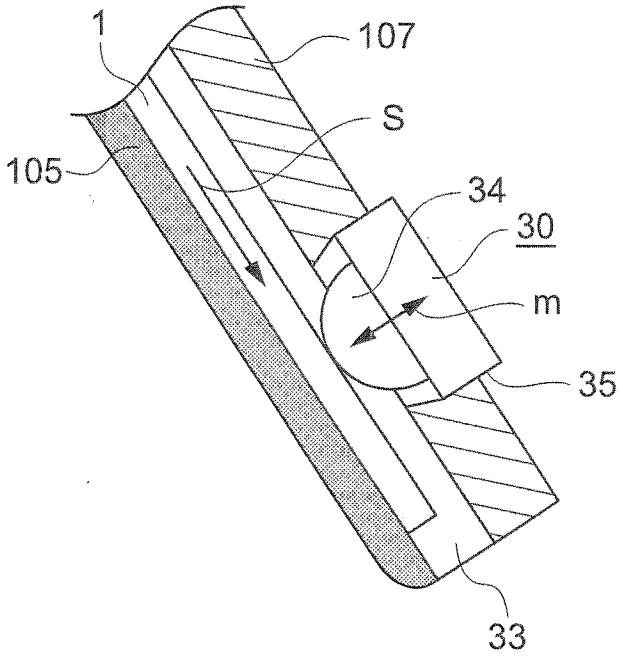

FIG.18B

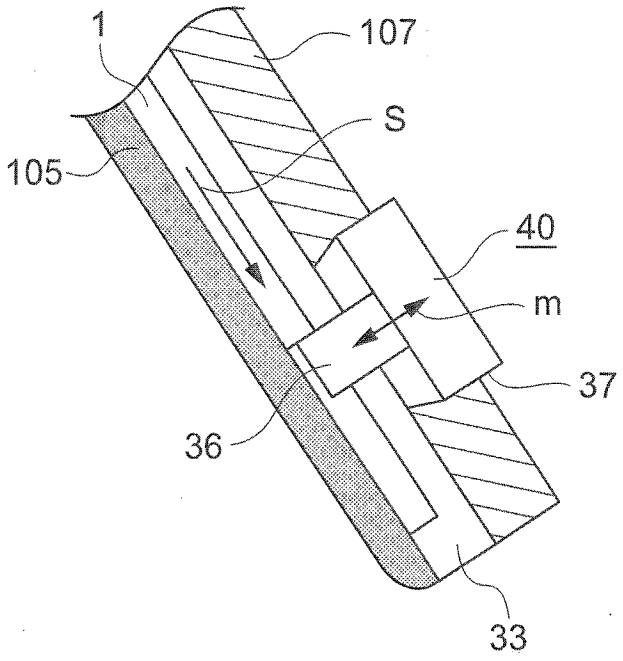

FIG.19

COMBINATION	MARKS	OUTPUT OF SENSORS
1	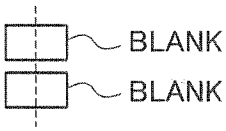	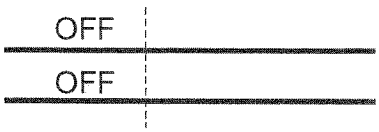
2	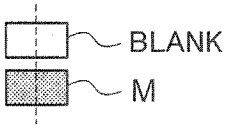	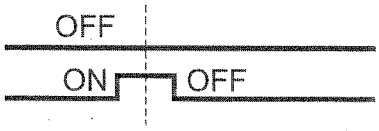
3	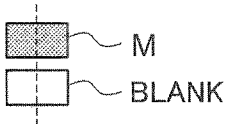	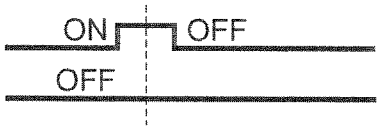
4	