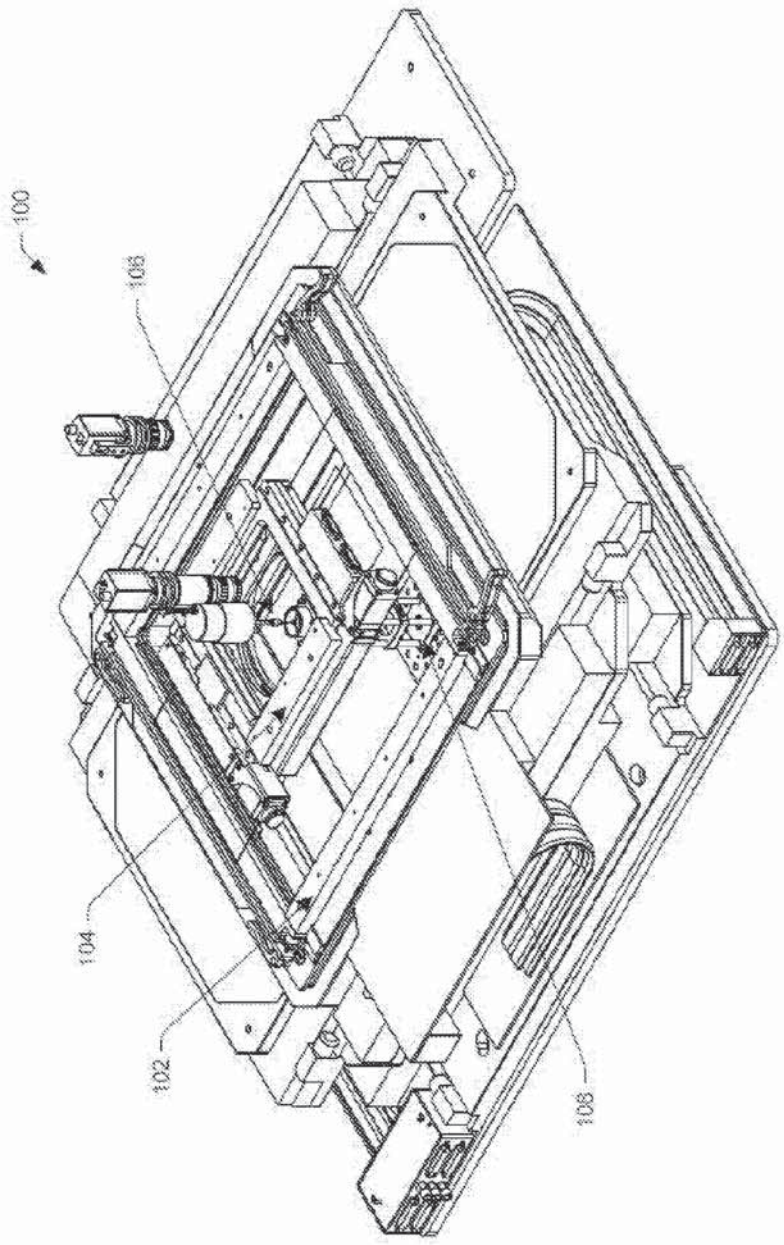

FIG. 1

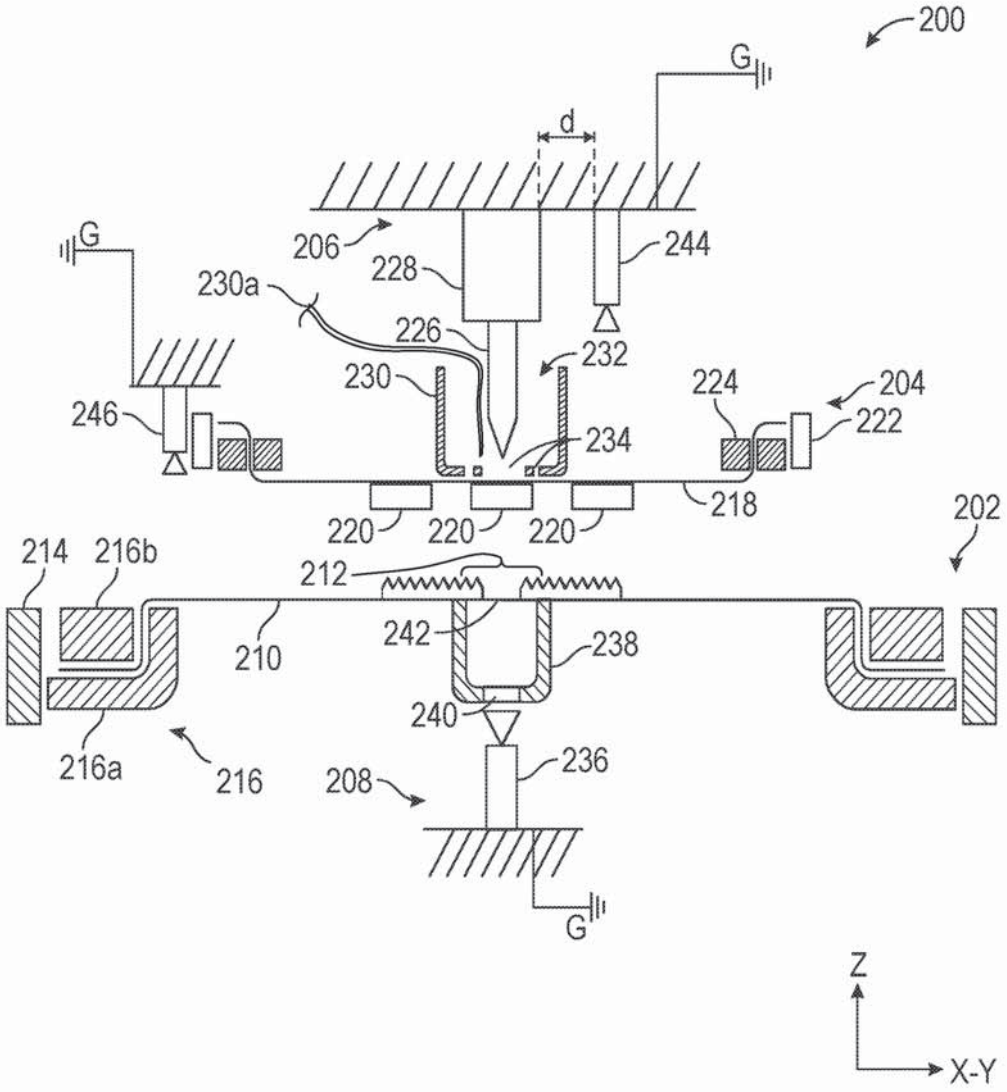
200
G
d
206
228
244
G
230a
226
232
230
224
204
246
222
234
218
220
220
220
202
214
216b
212
210
242
238
240
216a
216
208
236
G
Z
X-Y

FIG. 2A

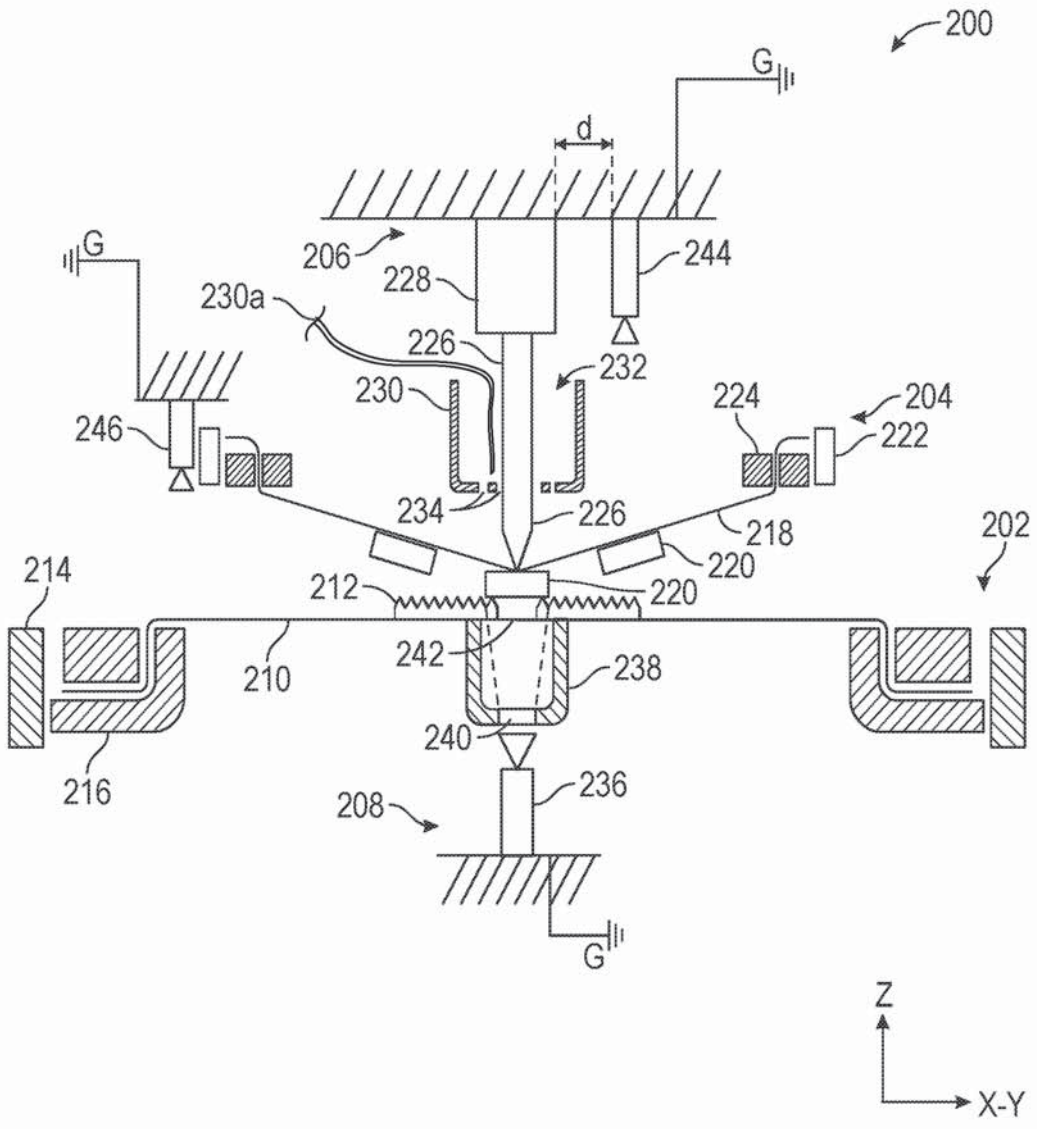
200
G
d
206
244
228
G
230a
226
232
230
224
204
222
246
234
226
218
202
214
212
220
220
242
238
210
240
216
236
208
G
Z
X-Y

FIG. 2B

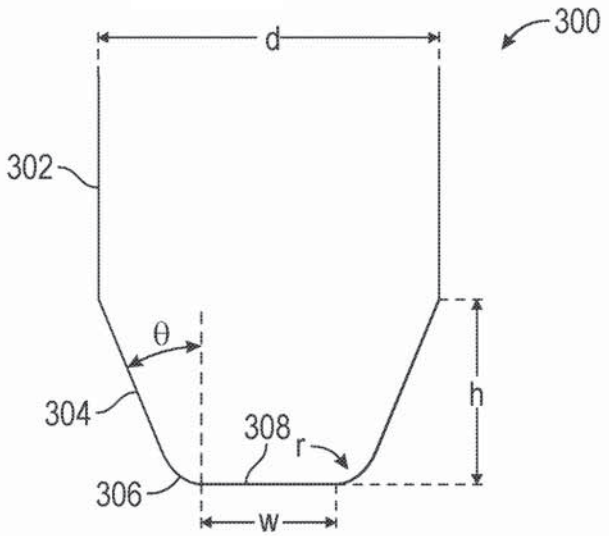
300
d
302
θ
304
308
r
306
h
w

FIG. 3

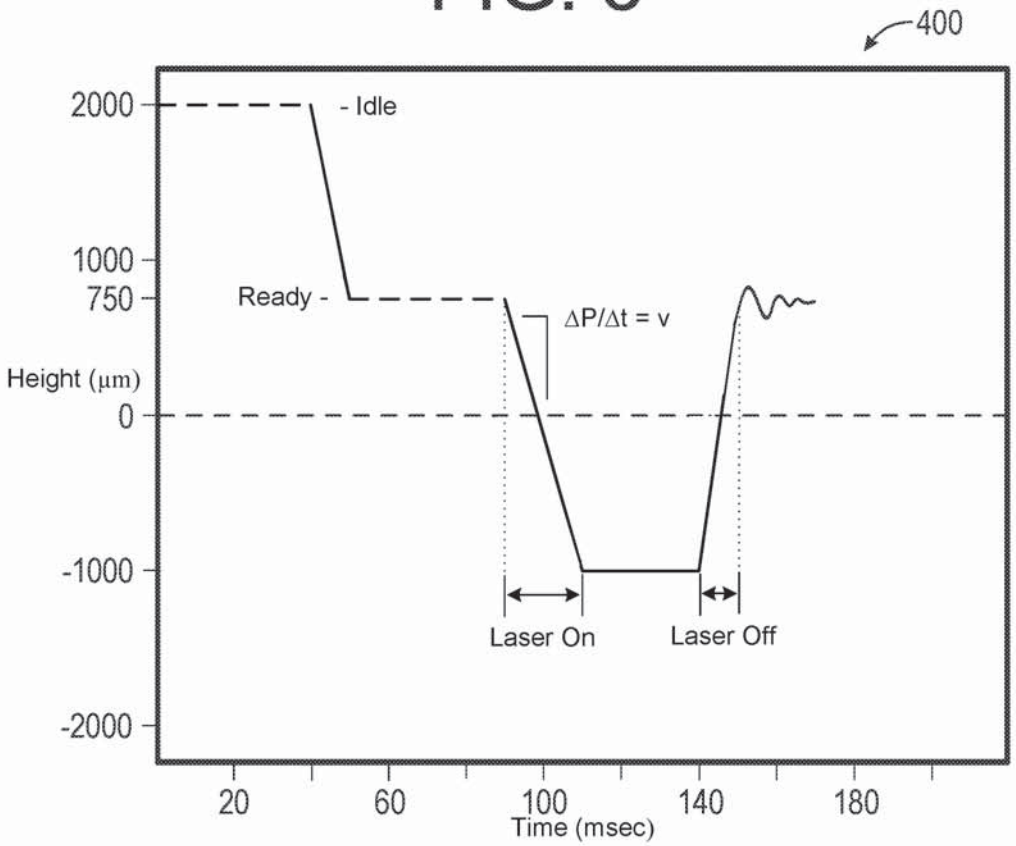
400
2000
- Idle
1000
750
Ready -
ΔP/Δt = v
Height (μm)
0
-1000
-2000
Laser On
Laser Off
20
60
100
140
180
Time (msec)

FIG. 4

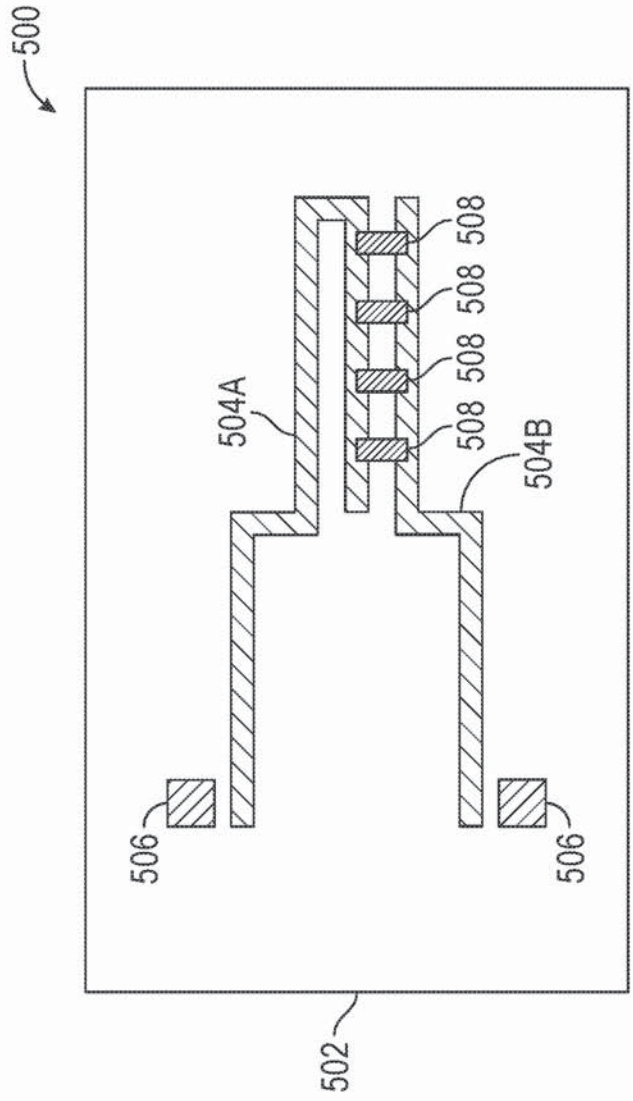

FIG. 5

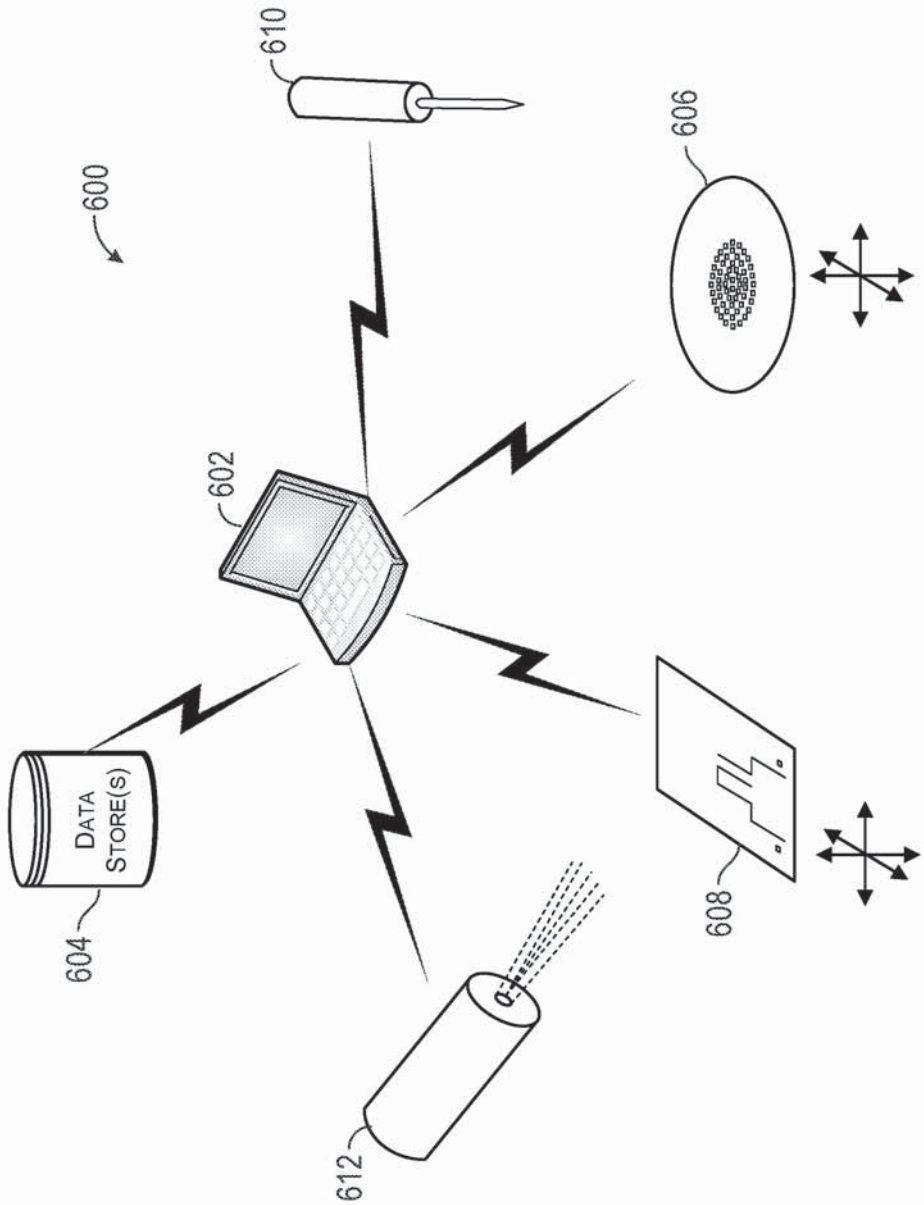

FIG. 6

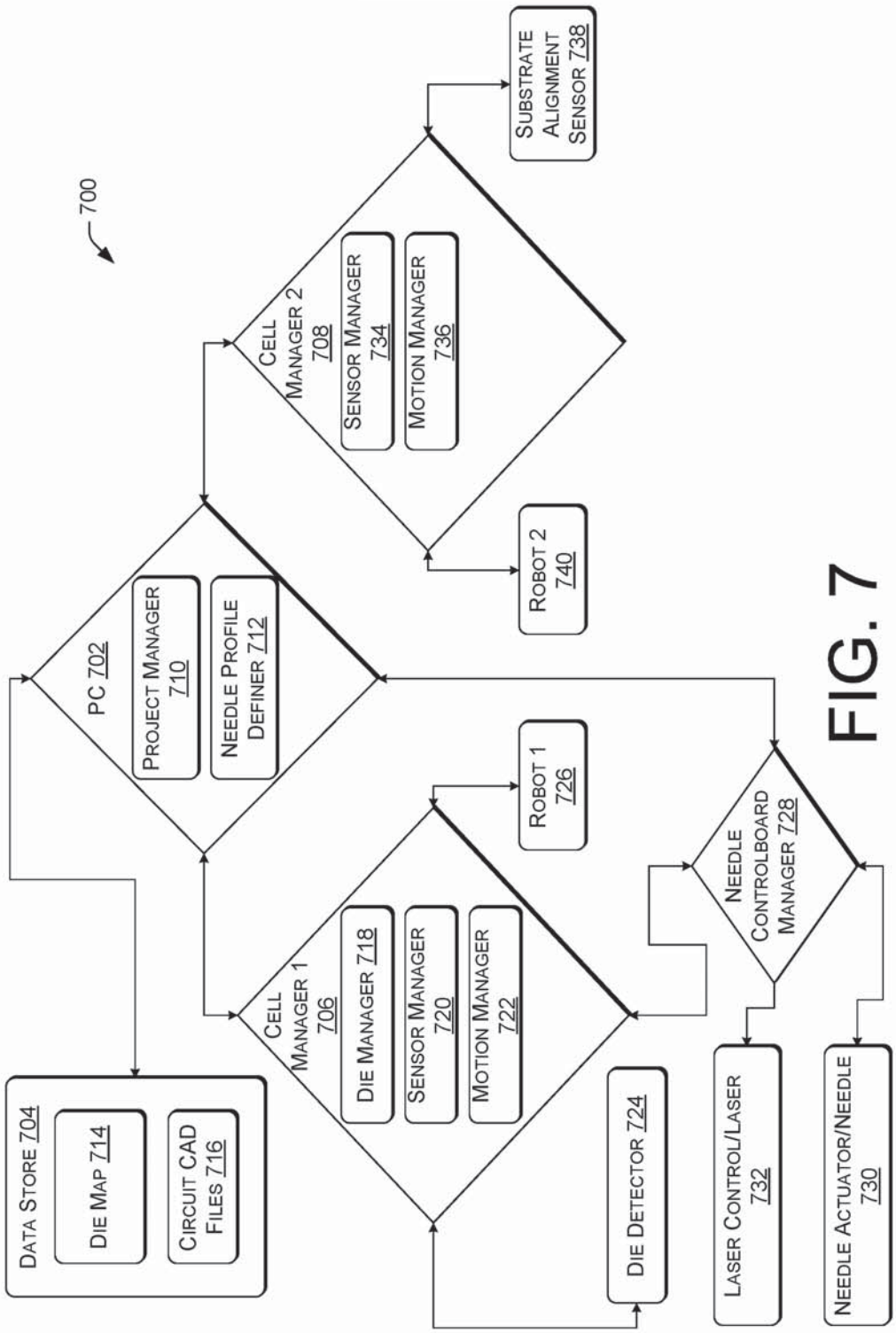
700
PC 702
PROJECT MANAGER 710
NEEDLE PROFILE DEFINER 712
DATA STORE 704
DIE MAP 714
CIRCUIT CAD FILES 716
CELL MANAGER 1 706
DIE MANAGER 718
SENSOR MANAGER 720
MOTION MANAGER 722
ROBOT 1 726
DIE DETECTOR 724
CELL MANAGER 2 708
SENSOR MANAGER 734
MOTION MANAGER 736
SUBSTRATE ALIGNMENT SENSOR 738
ROBOT 2 740
NEEDLE CONTROLBOARD MANAGER 728
LASER CONTROL/LASER 732
NEEDLE ACTUATOR/NEEDLE 730

FIG. 7

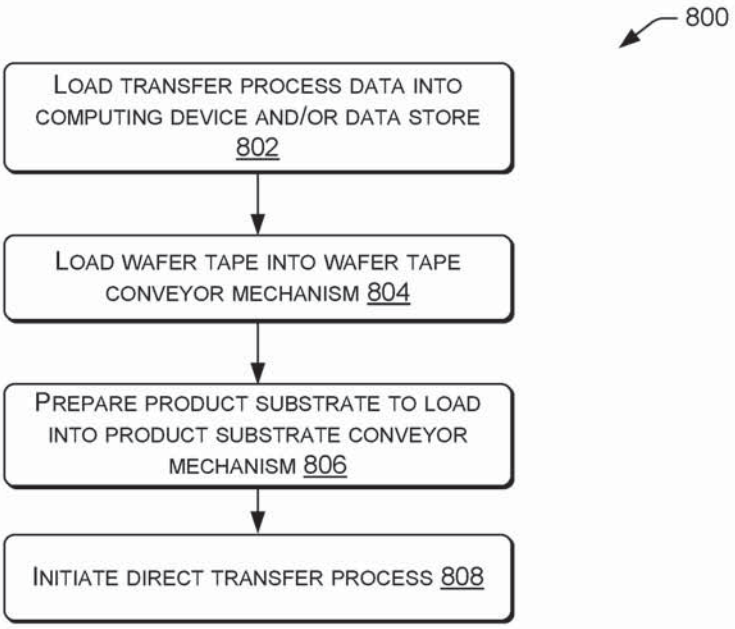
800
LOAD TRANSFER PROCESS DATA INTO COMPUTING DEVICE AND/OR DATA STORE 802
LOAD WAFER TAPE INTO WAFER TAPE CONVEYOR MECHANISM 804
PREPARE PRODUCT SUBSTRATE TO LOAD INTO PRODUCT SUBSTRATE CONVEYOR MECHANISM 806
INITIATE DIRECT TRANSFER PROCESS 808

FIG. 8

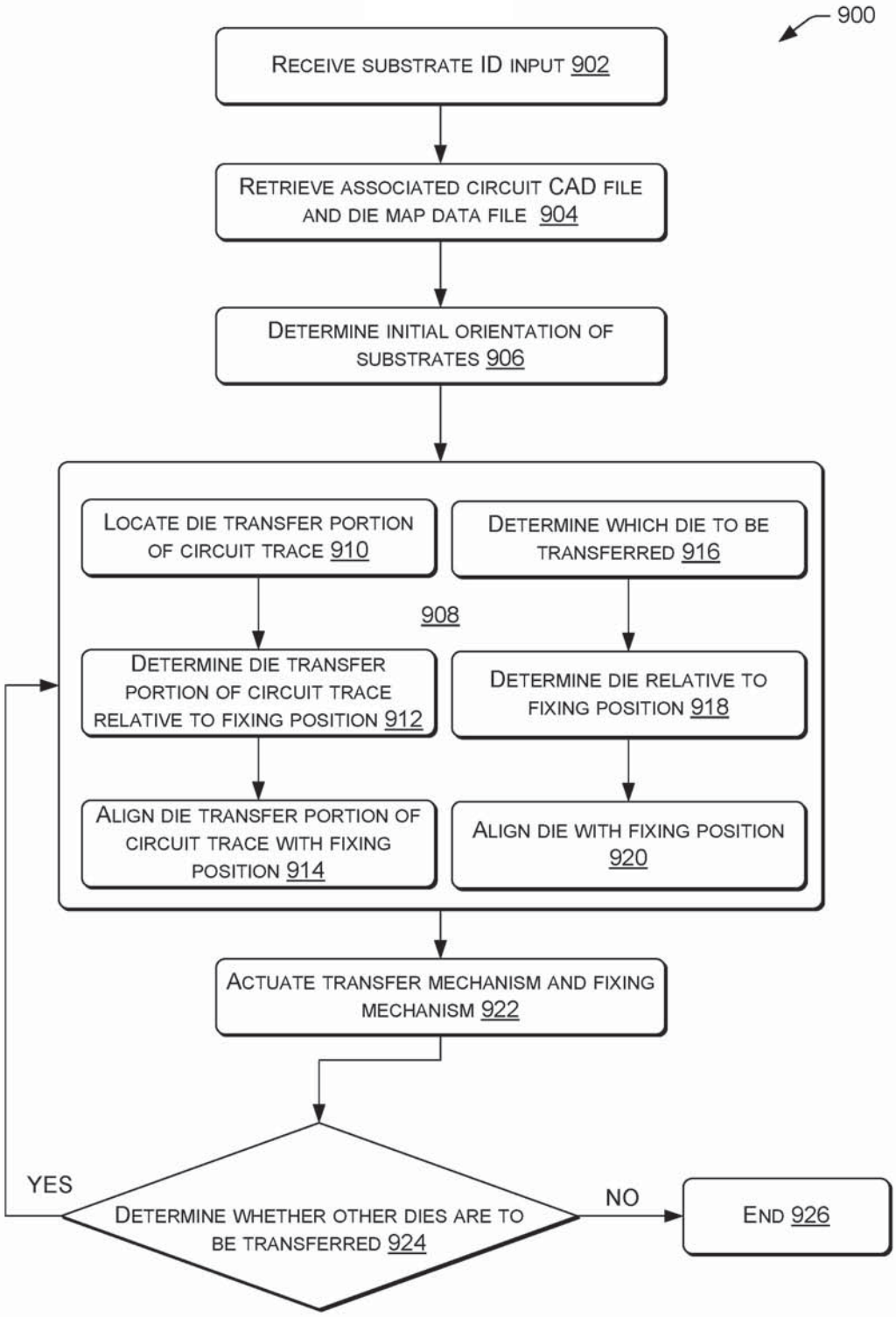
900
RECEIVE SUBSTRATE ID INPUT 902
RETRIEVE ASSOCIATED CIRCUIT CAD FILE AND DIE MAP DATA FILE 904
DETERMINE INITIAL ORIENTATION OF SUBSTRATES 906
LOCATE DIE TRANSFER PORTION OF CIRCUIT TRACE 910
DETERMINE WHICH DIE TO BE TRANSFERRED 916
908
DETERMINE DIE TRANSFER PORTION OF CIRCUIT TRACE RELATIVE TO FIXING POSITION 912
DETERMINE DIE RELATIVE TO FIXING POSITION 918
ALIGN DIE TRANSFER PORTION OF CIRCUIT TRACE WITH FIXING POSITION 914
ALIGN DIE WITH FIXING POSITION 920
ACTUATE TRANSFER MECHANISM AND FIXING MECHANISM 922
YES
DETERMINE WHETHER OTHER DIES ARE TO BE TRANSFERRED 924
NO
END 926

FIG. 9

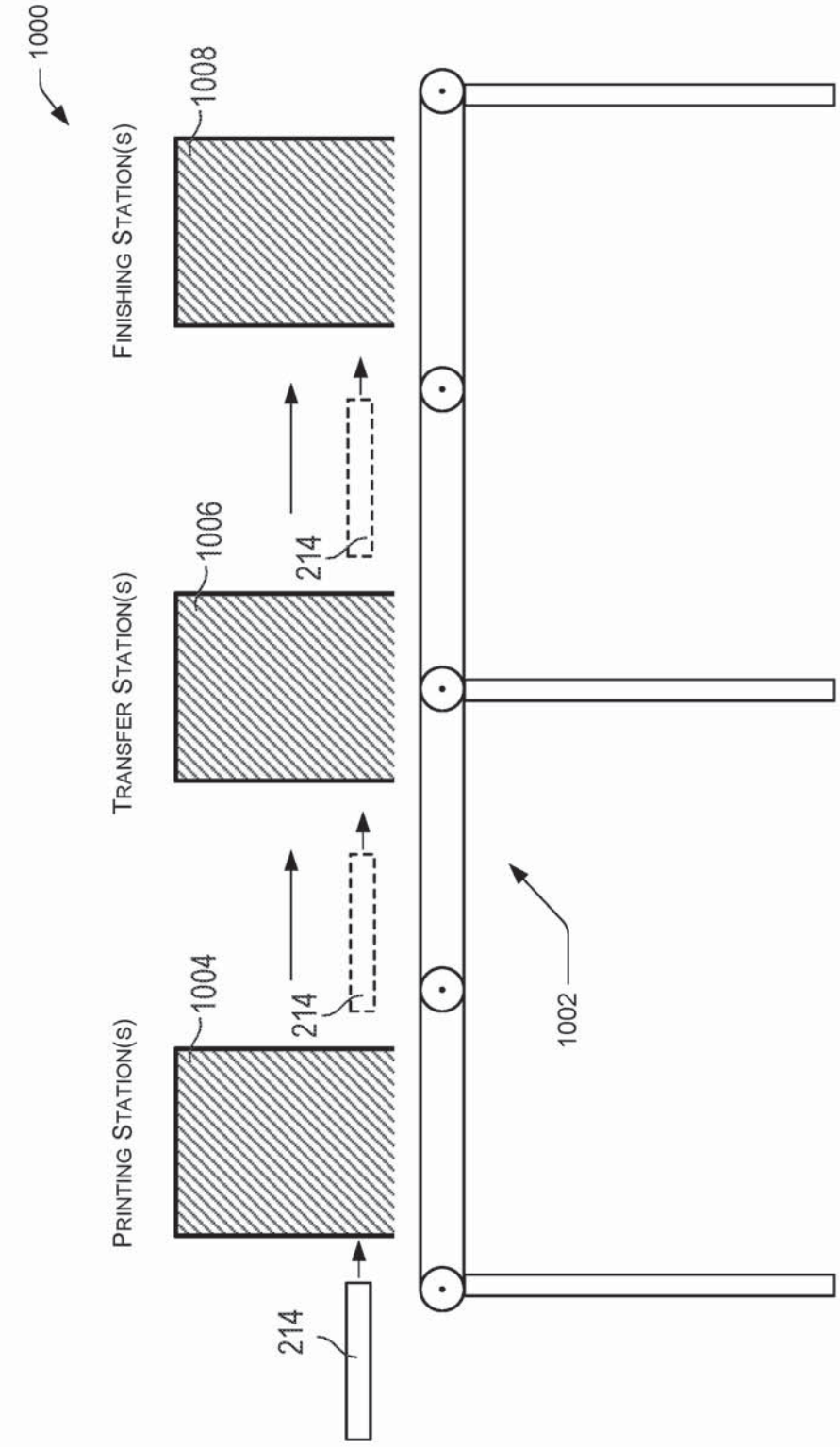
1000
FINISHING STATION(S)
1008
TRANSFER STATION(S)
1006
214
PRINTING STATION(S)
1004
214
214
1002

FIG. 10

FIG. 11A

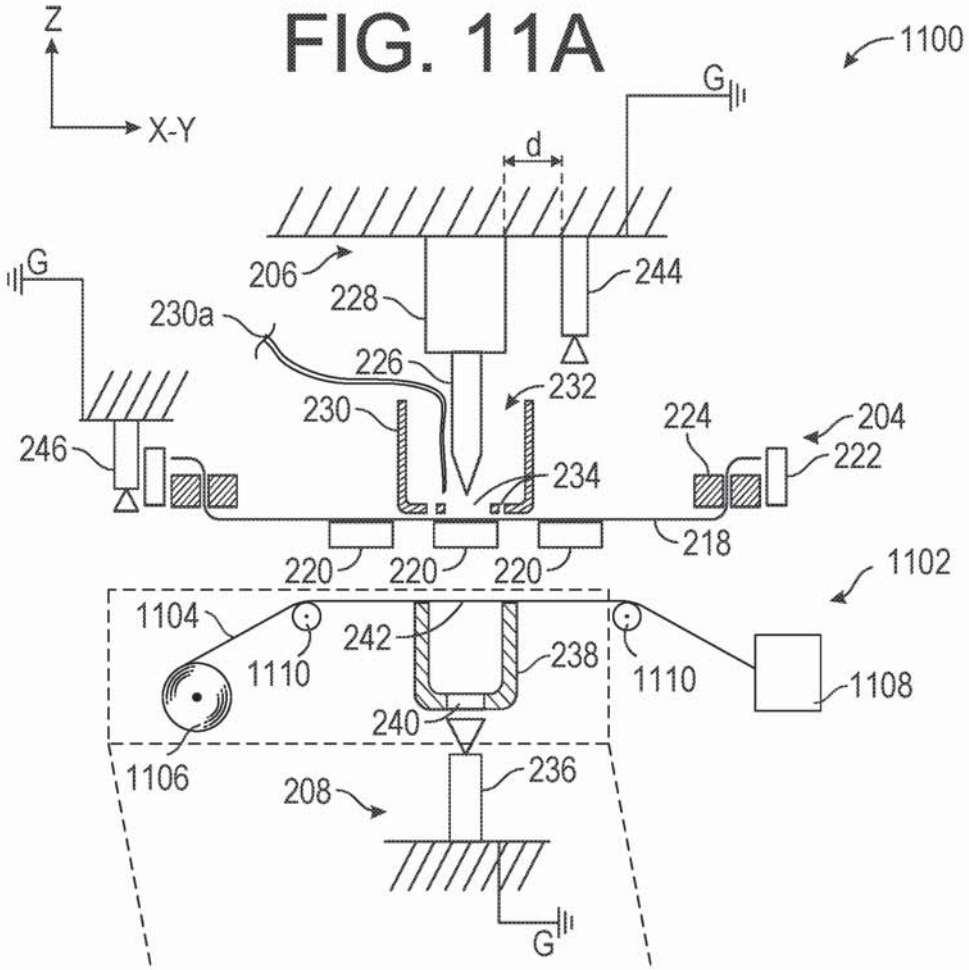

FIG. 11B

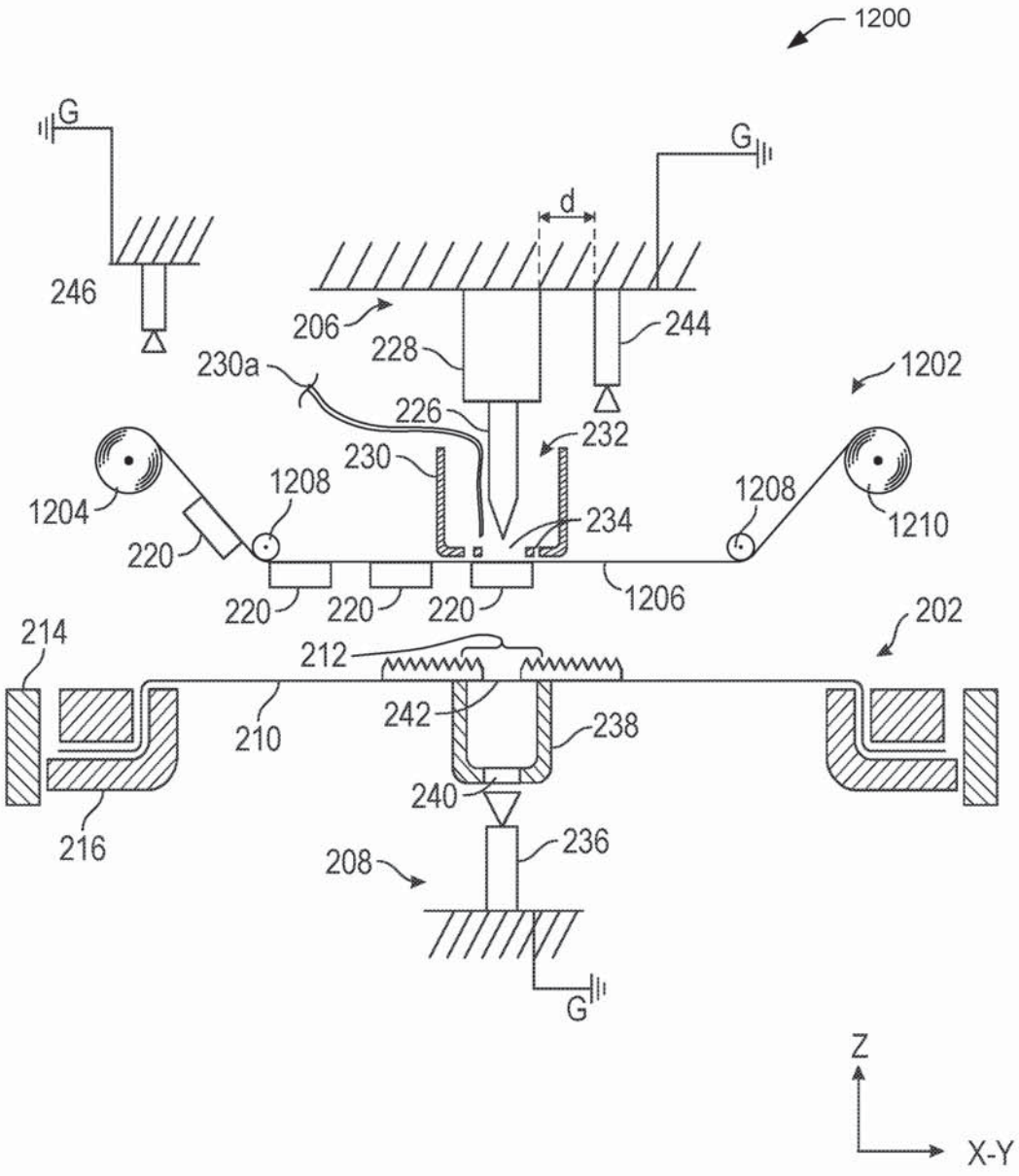
1200
G
G
d
246
206
228
244
230a
1202
226
232
230
1208
1208
1204
1210
234
220
220
220
220
1206
214
202
212
210
242
238
240
216
208
236
G
Z
X-Y

FIG. 12

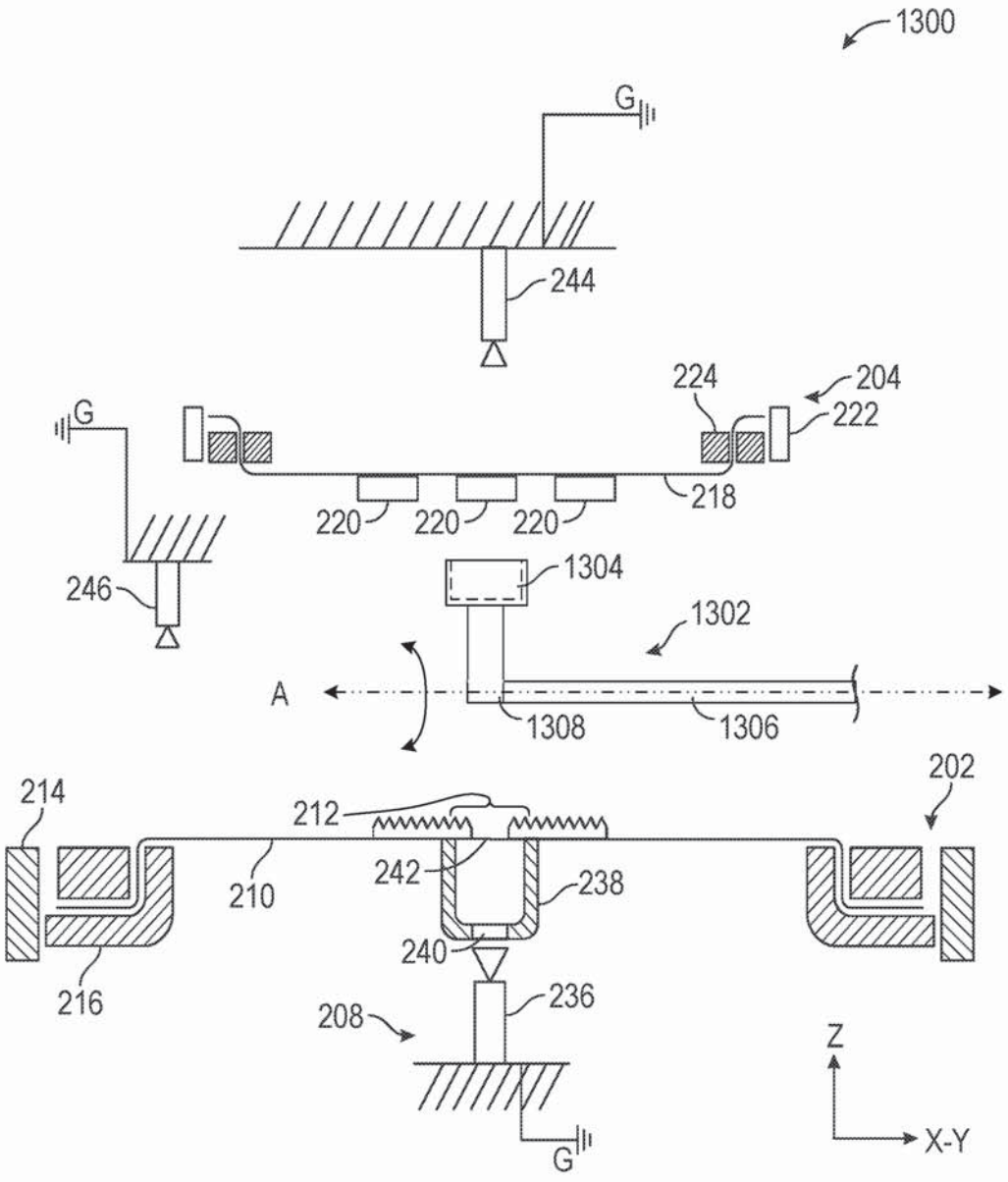
1300
G
244
224
204
222
G
220
220
220
218
246
1304
1302
A
1308
1306
202
214
212
210
242
238
240
216
208
236
Z
X-Y
G

FIG. 13