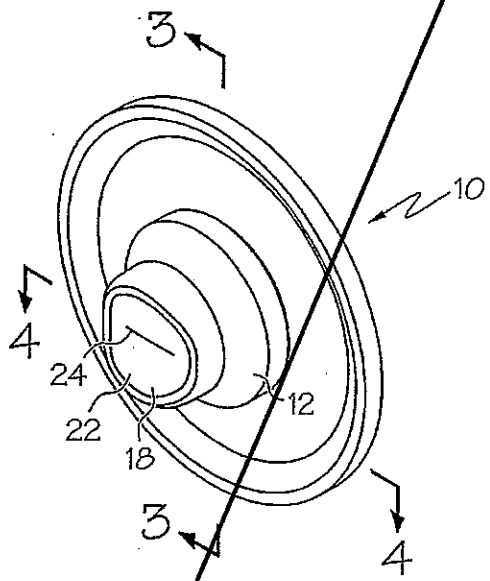

FIG. 1

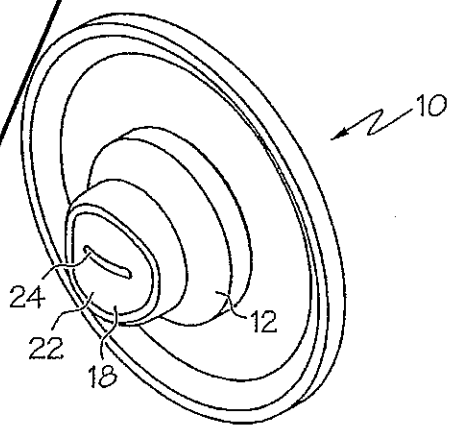

FIG. 2

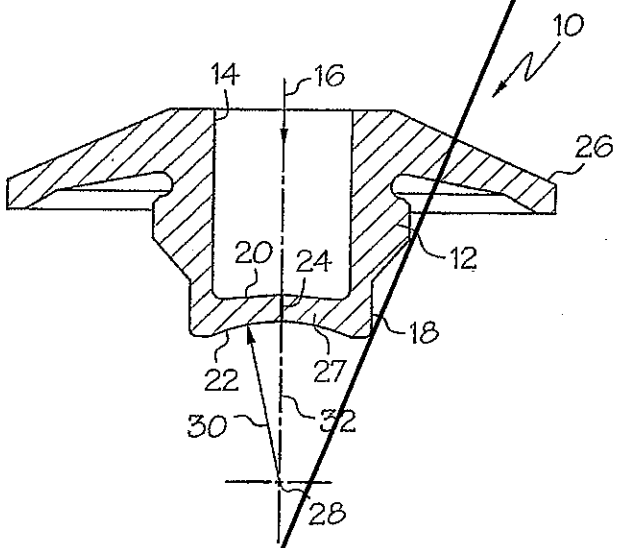

FIG. 3

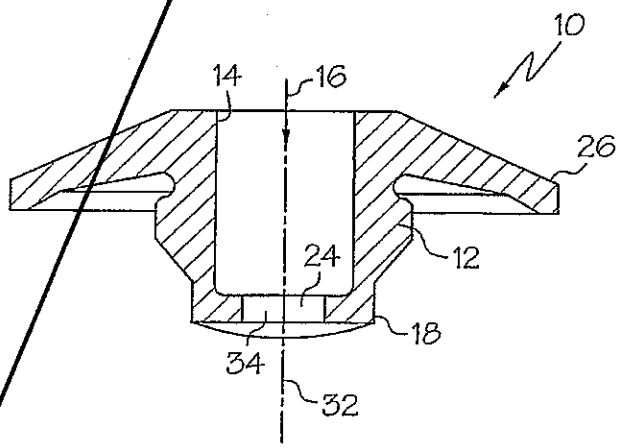

FIG. 4

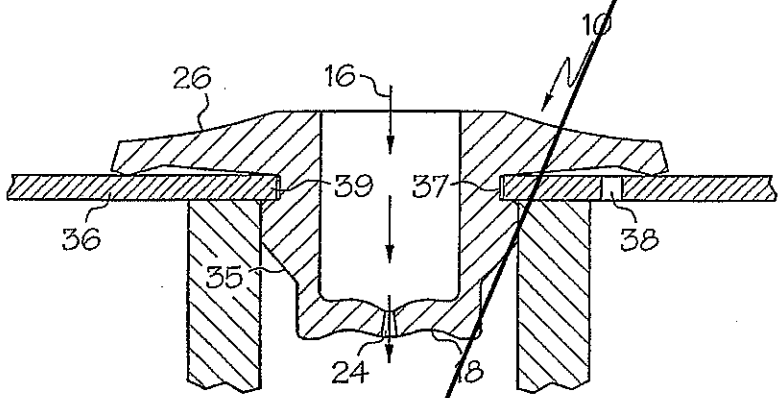

FIG. 5

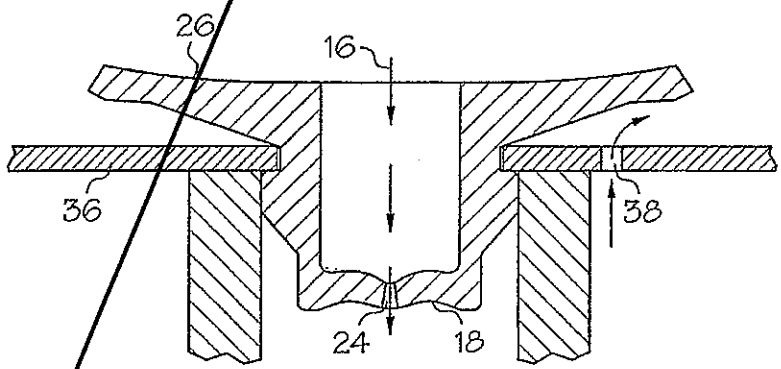

FIG. 6

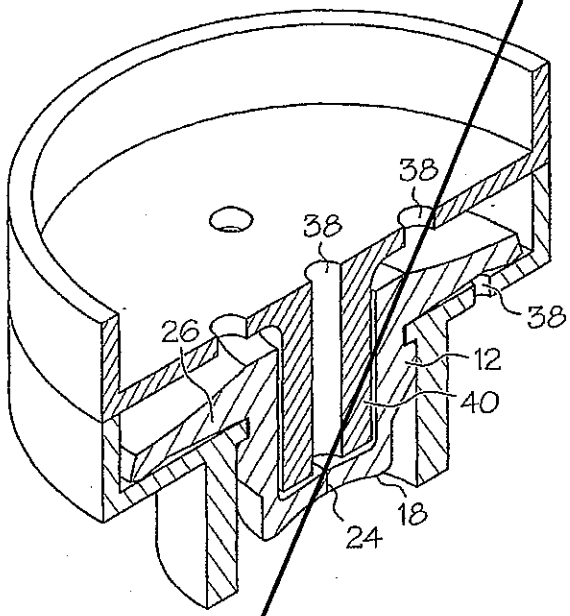
38
38
38
26
12
40
18
24

FIG. 7

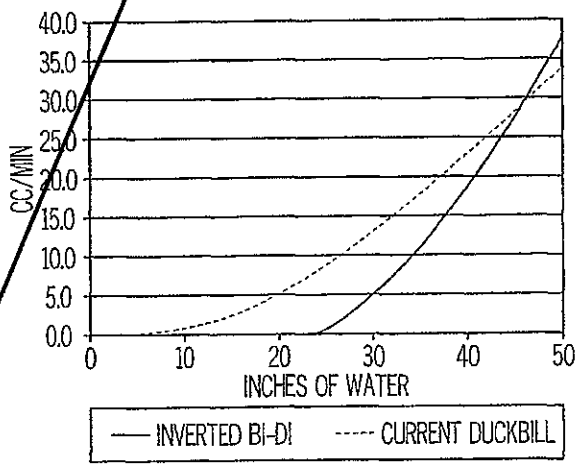
40.0
35.0
30.0
25.0
20.0
15.0
10.0
5.0
0.0
CC/MIN
0
10
20
30
40
50
INCHES OF WATER
INVERTED BI-DI
CURRENT DUCKBILL

FIG. 8

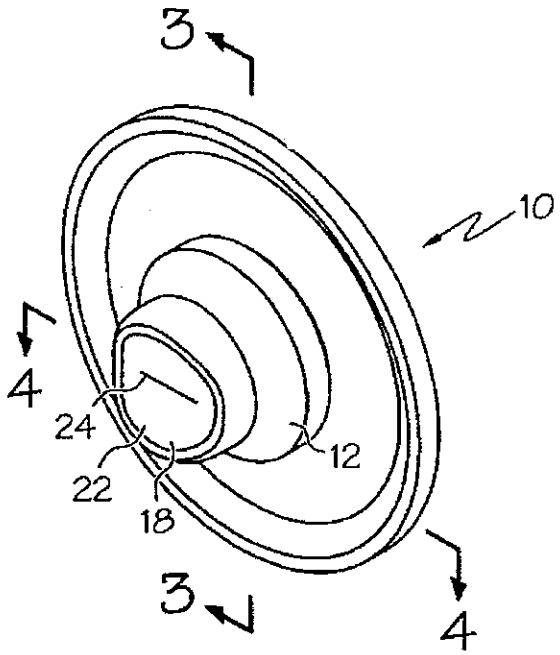

FIG. 1

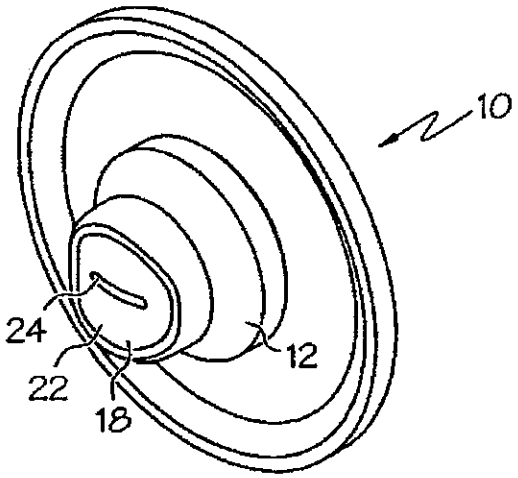

FIG. 2

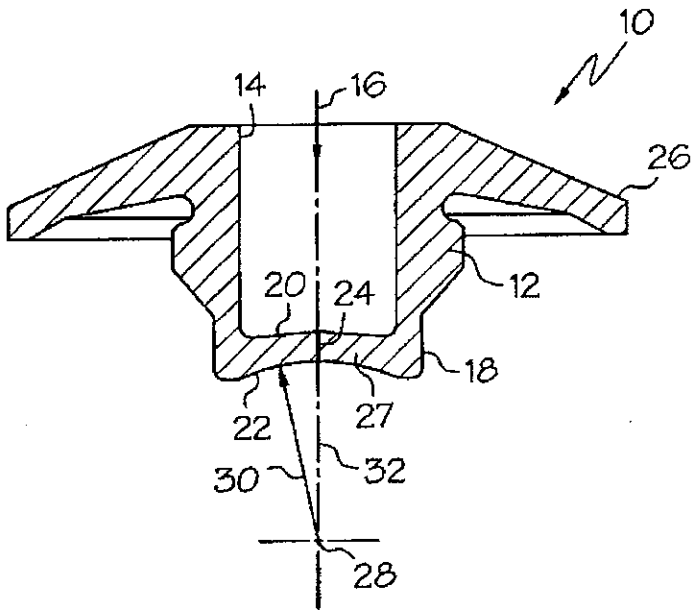

FIG. 3

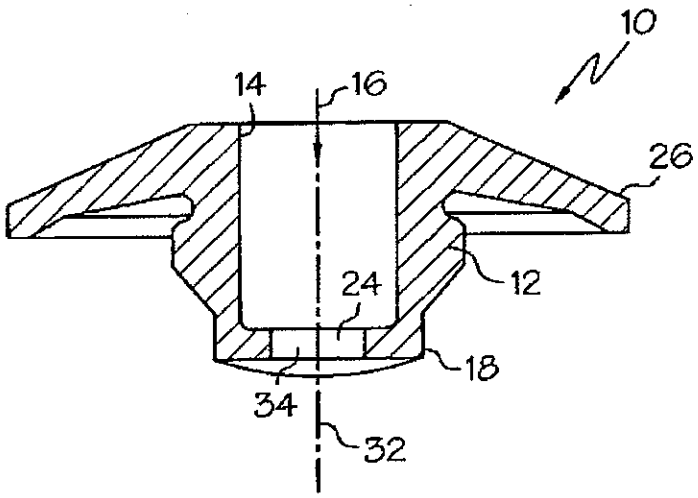

FIG. 4

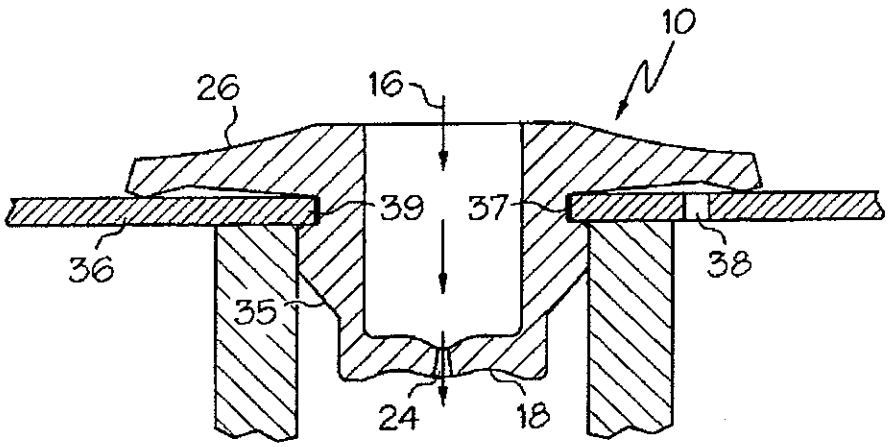

FIG. 5

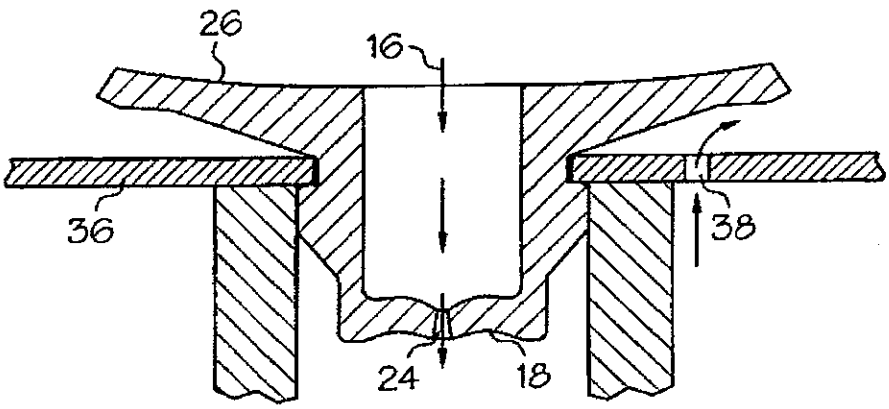

FIG. 6

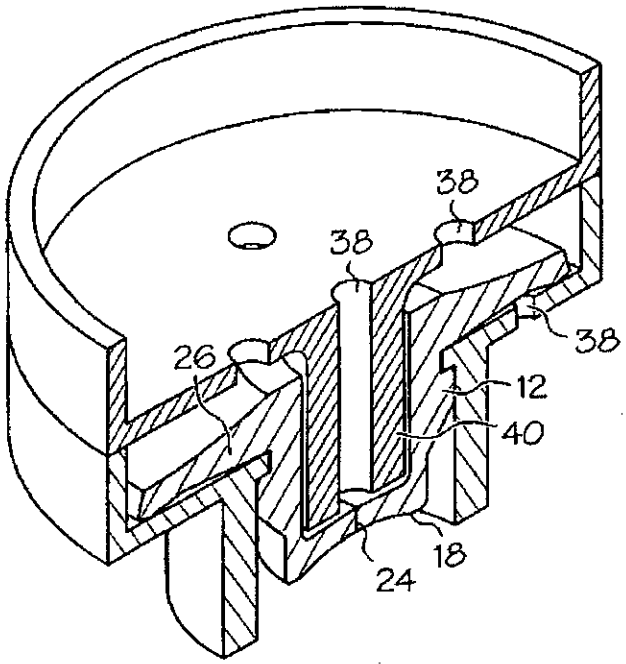
38
38
38
26
12
40
18
24

FIG. 7

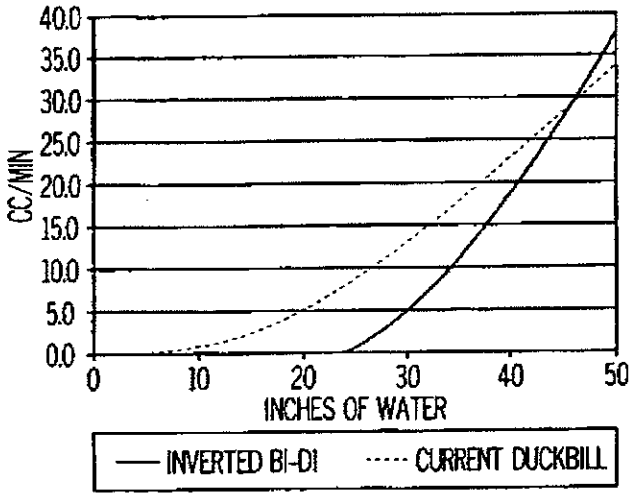
40.0
35.0
30.0
25.0
20.0
15.0
10.0
5.0
0.0
CC/MIN
0
10
20
30
40
50
INCHES OF WATER
INVERTED BI-DI
CURRENT DUCKBILL

FIG. 8