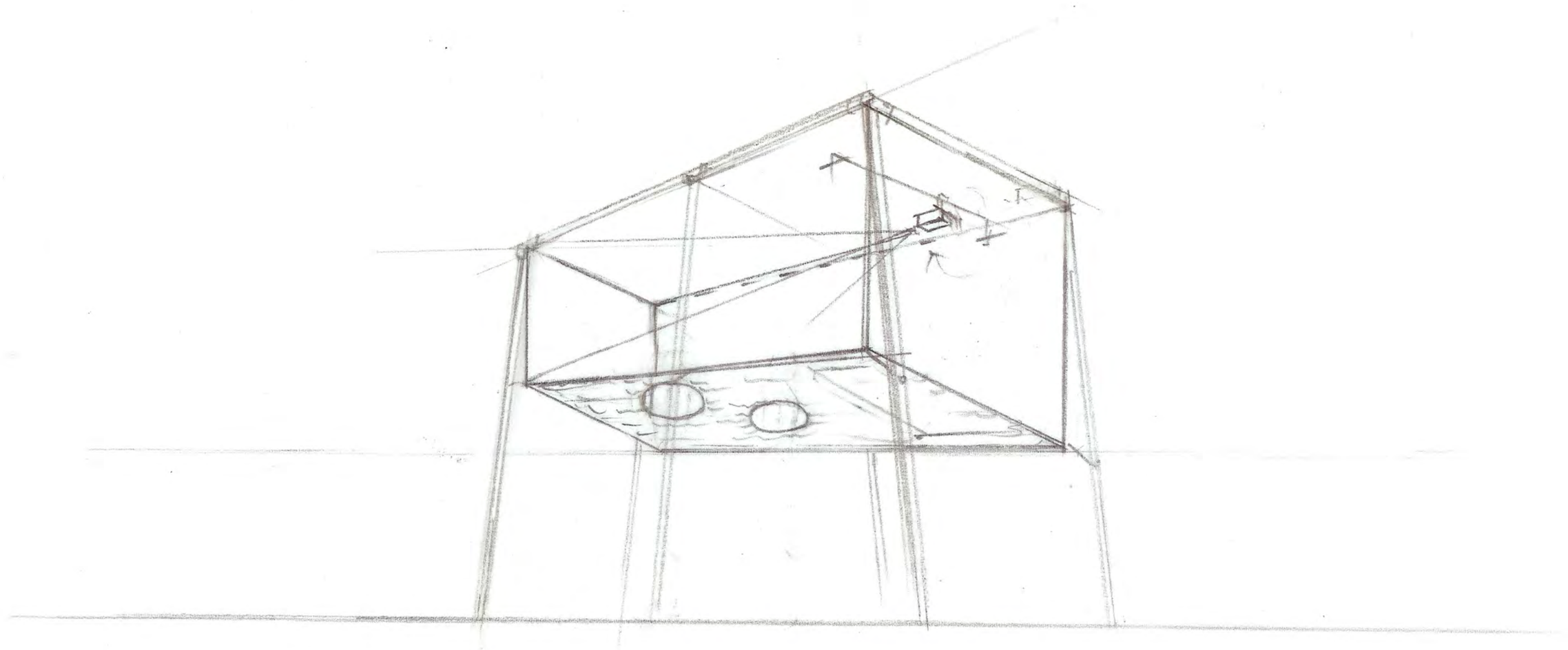

Mobile-Black-Box
- Variation A -

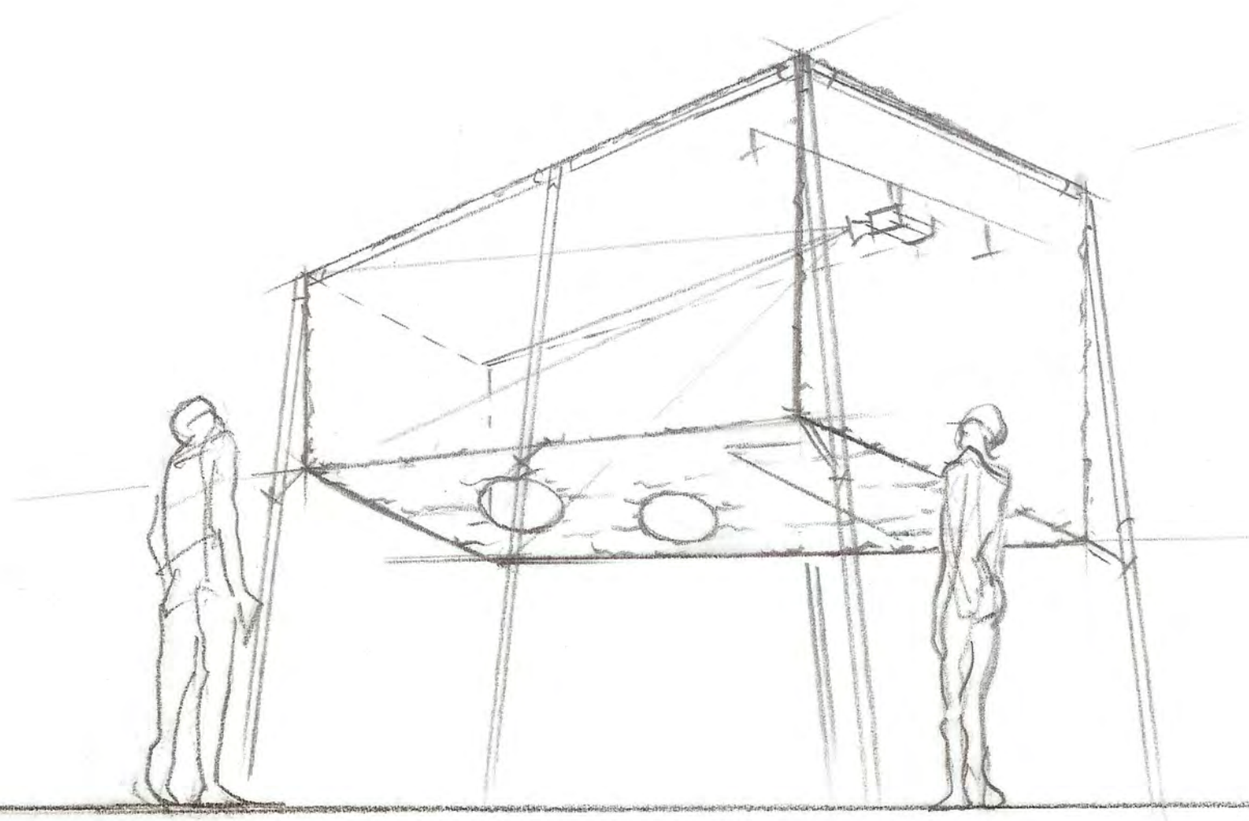

Mobile - Black - Box

- Version 2 -

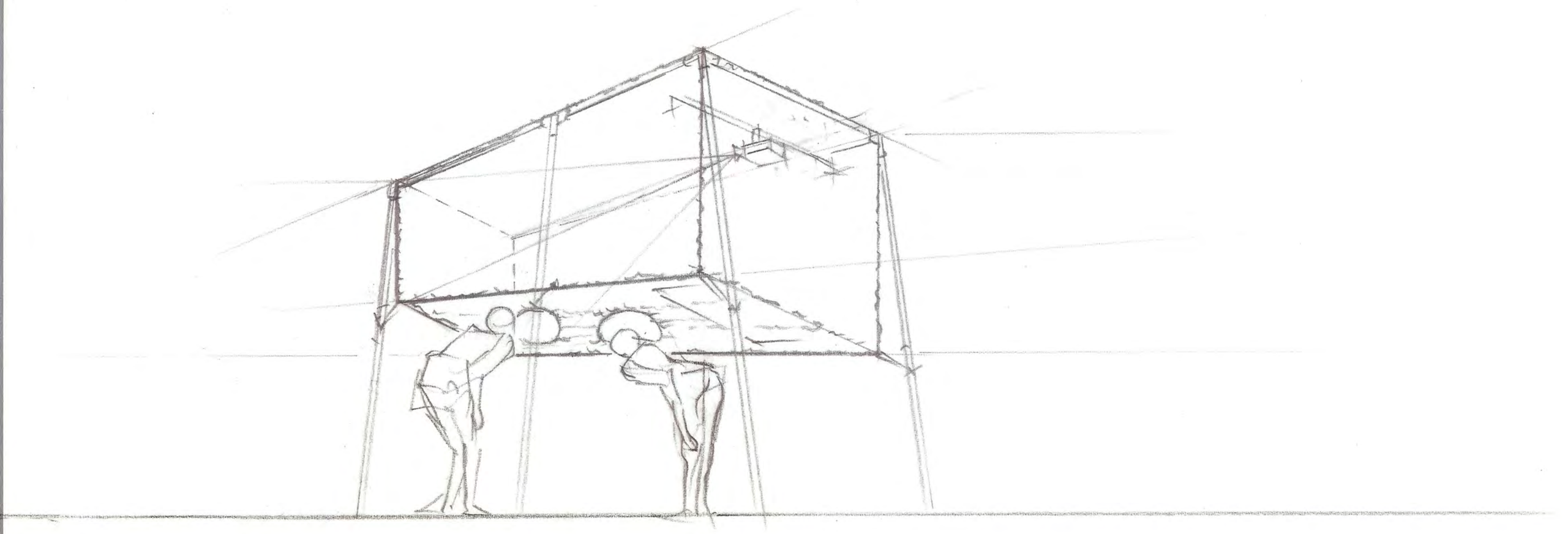

Mobile-Black-Box
-Viewing 3-

Samfung

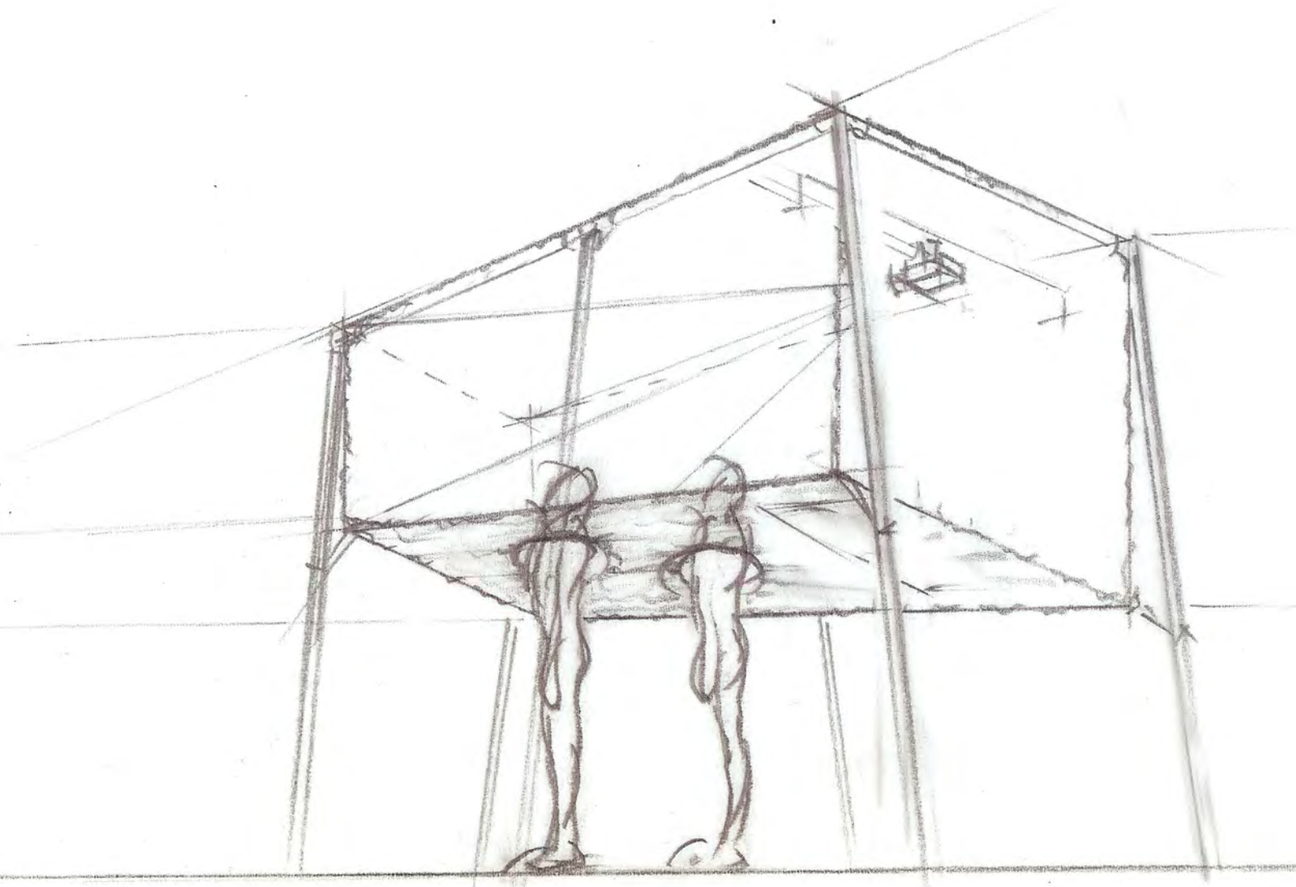

Mobile-Black-Box
-viewing 4-

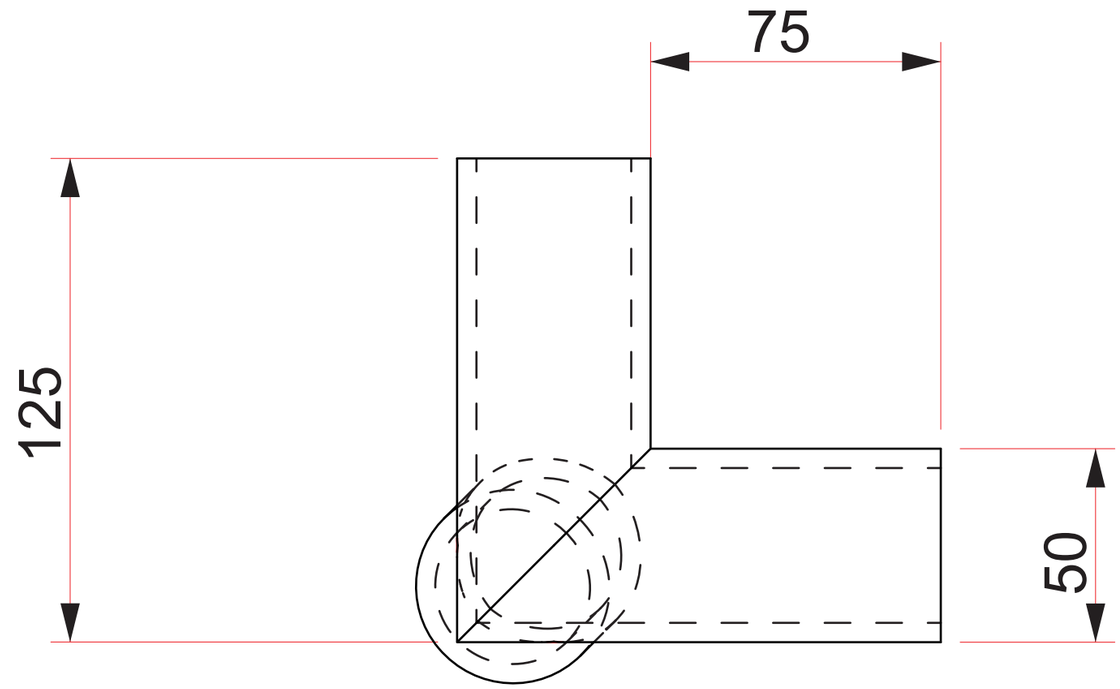

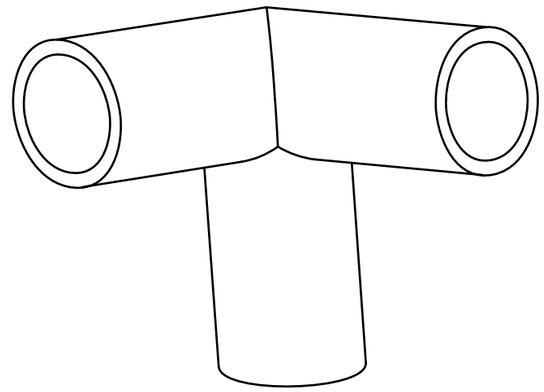

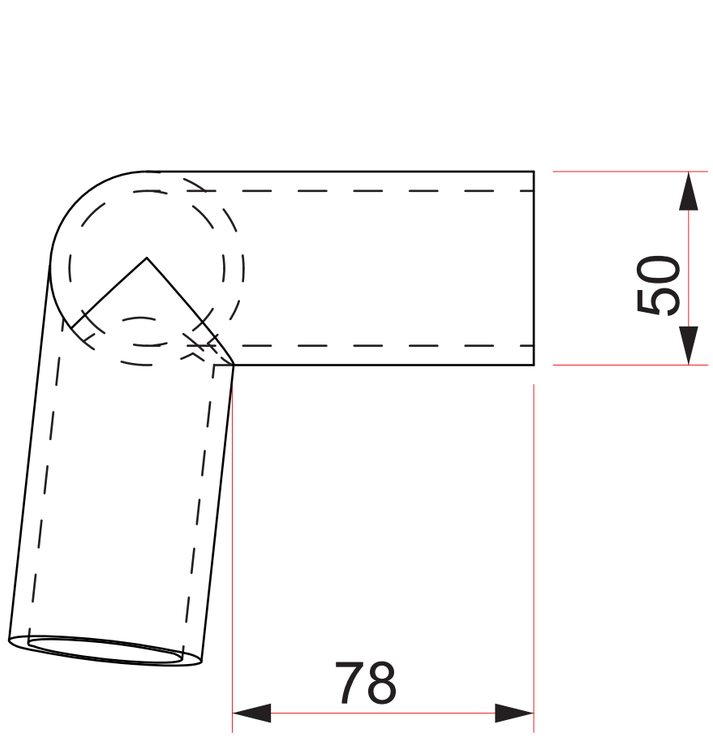

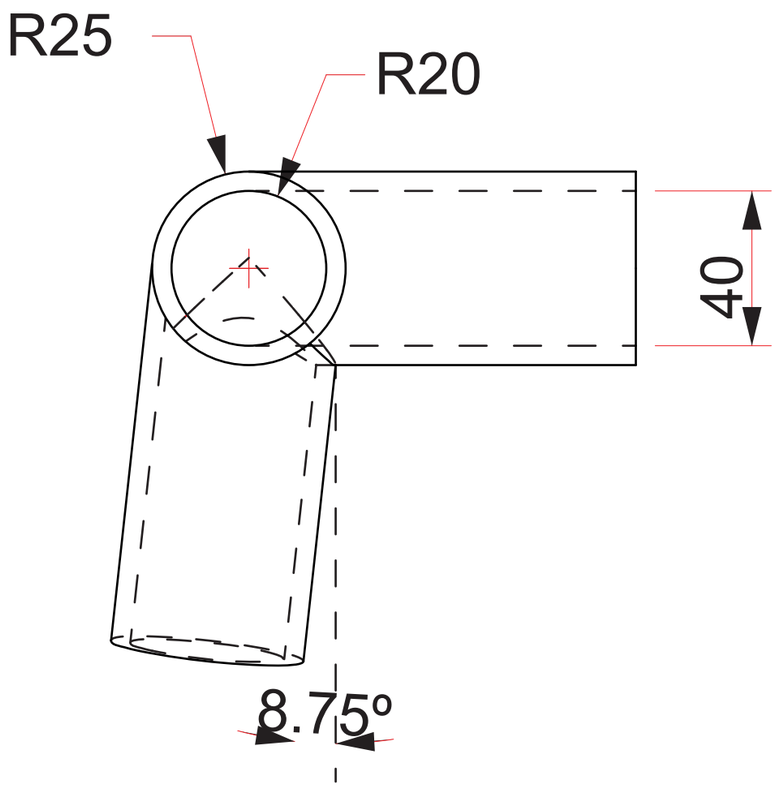

Project	Mobile Black Box	Part	01 - Corner Bracket
Concept	Semi-enclosed Mobile cinematic theater for film & video, virtual reality, serious gaming and media	Design	Lam Fung
Scale	1:2	* All dimension measured in millimeters (mm)	

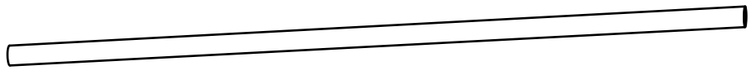

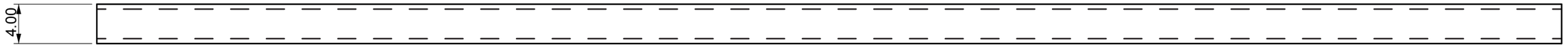

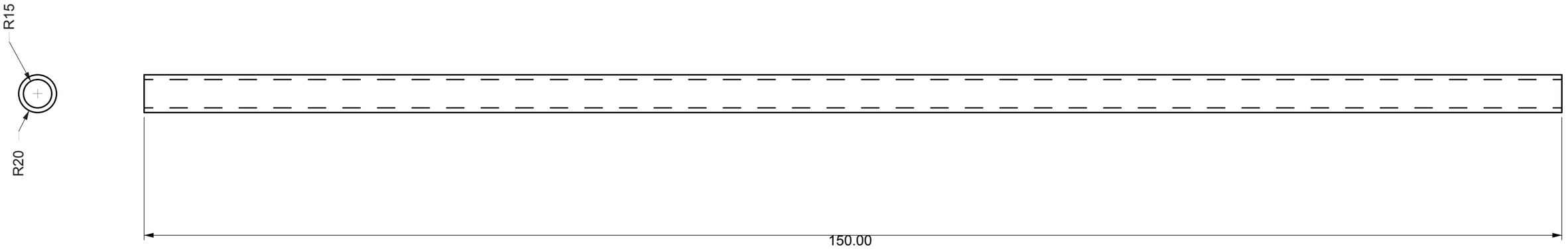

Project	Mobile Black Box	Part	02 - Top joining pole
Concept	Semi-enclosed Mobile cinematic theater for film & video, virtual reality, serious gaming and media	Design	Lam Fung
Scale	1:3	* All dimension measured in millimeters (mm)	

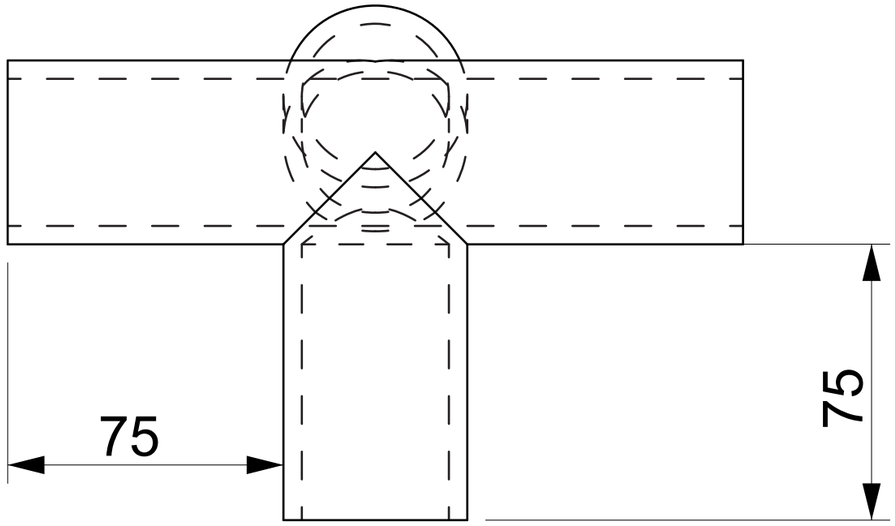

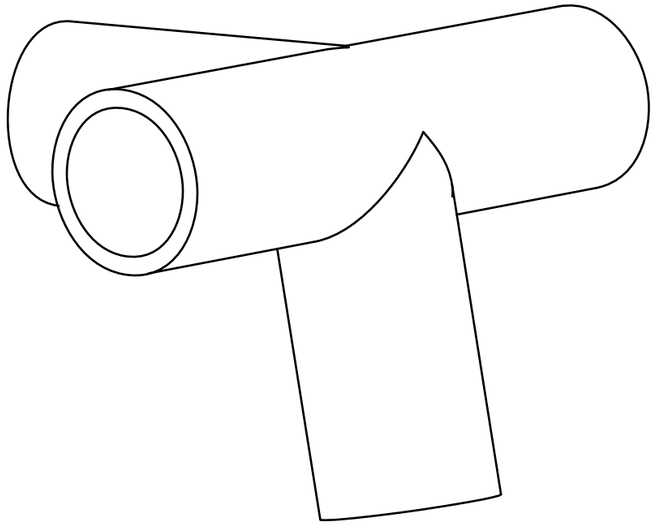

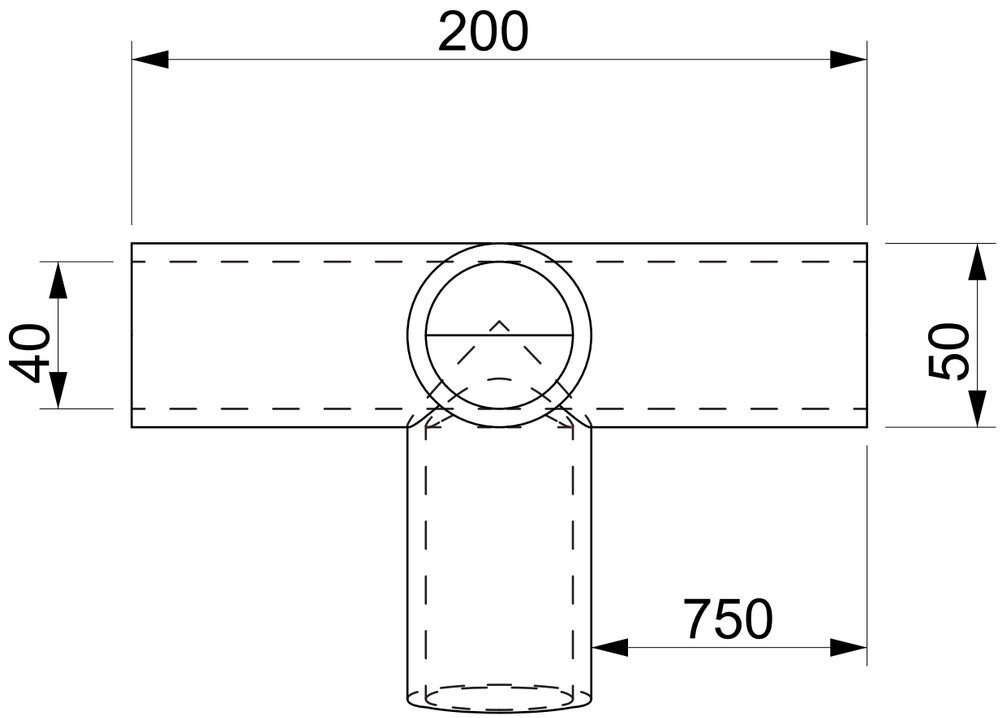

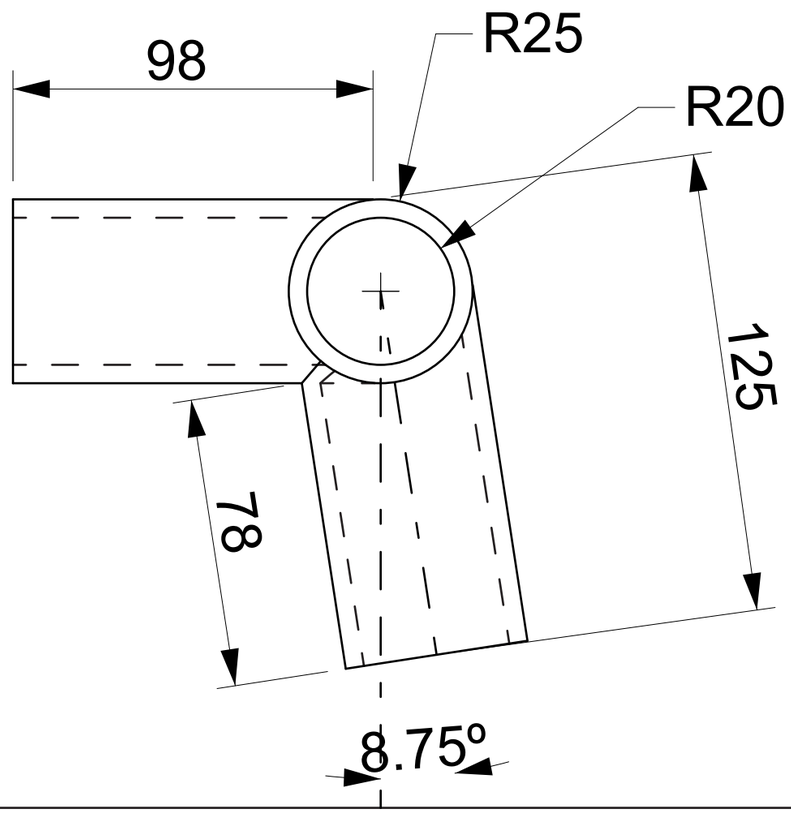

Project	Mobile Black Box	Part	03 - “T” Bracket
Concept	Semi-enclosed Mobile cinematic theater for film & video, virtual reality, serious gaming and media	Design	Lam Fung
Scale	1:2	* All dimension measured in millimeters (mm)	

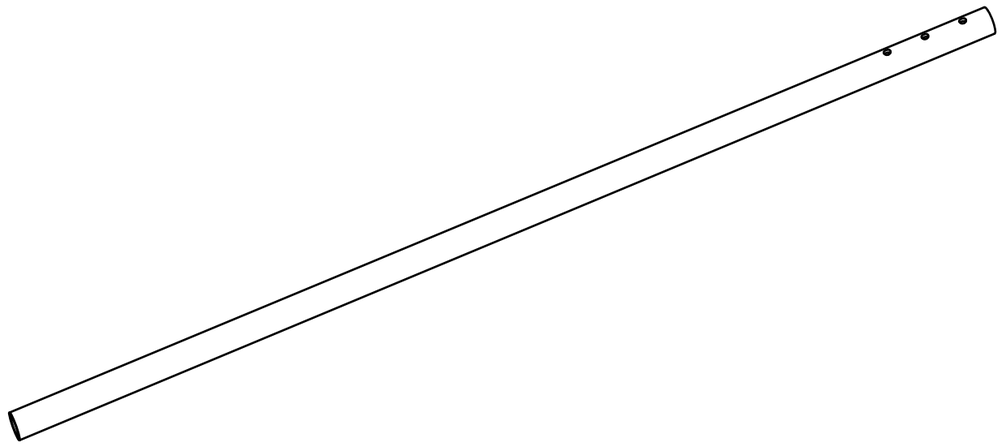

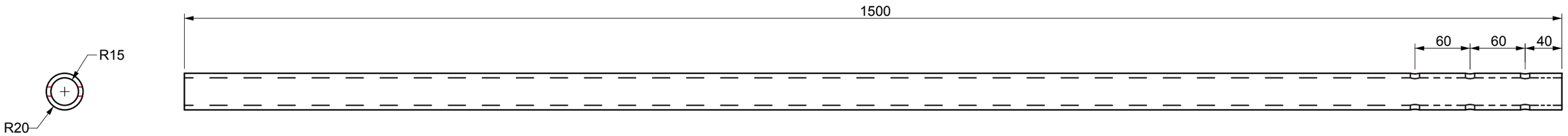

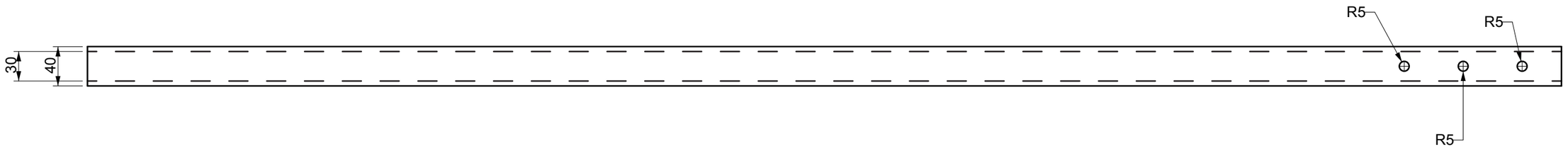

Project	Mobile Black Box	Part	04 - Standing pole (Top)
Concept	Semi-enclosed Mobile cinematic theater for film & video, virtual reality, serious gaming and media	Design	Lam Fung
Scale	1:1	* All dimension measured in millimeters (mm)	

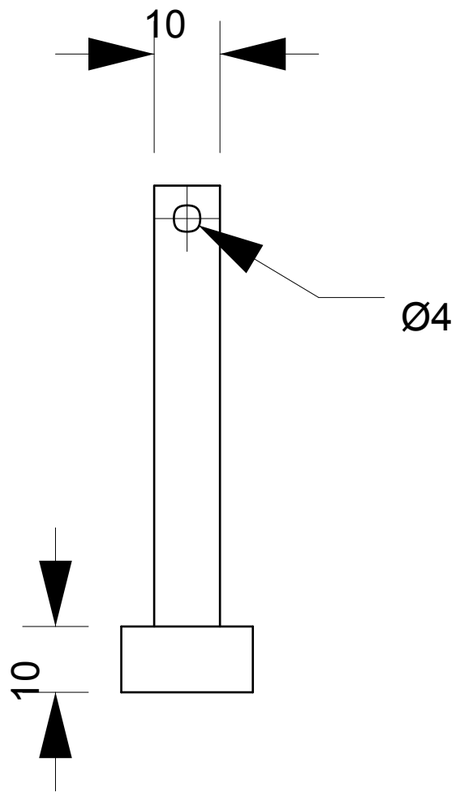

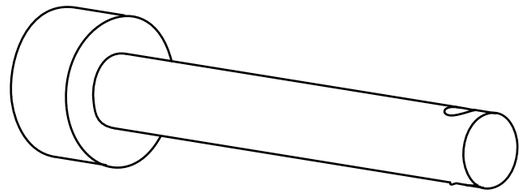

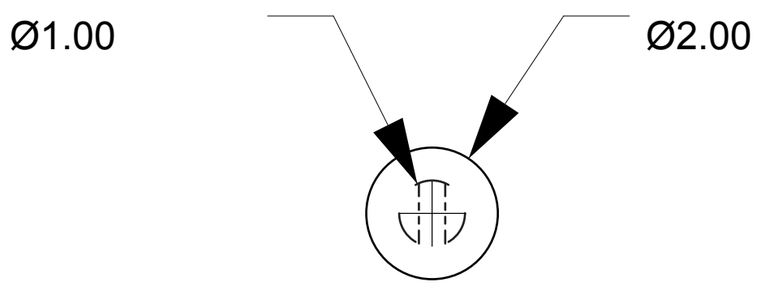

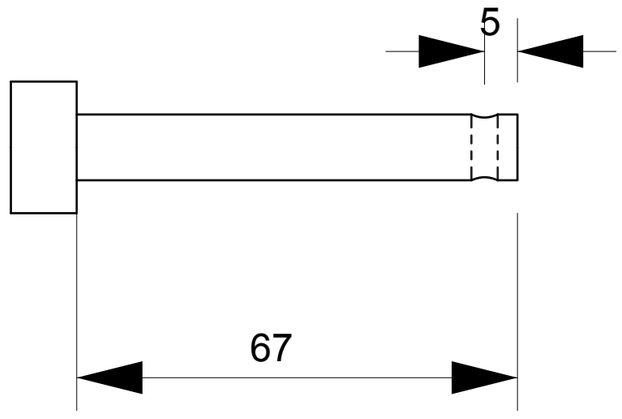

Project	Mobile Black Box	Part	05 - Standing pole key
Concept	Semi-enclosed Mobile cinematic theater for film & video, virtual reality, serious gaming and media	Design	Lam Fung
Scale	1:1	* All dimension measured in millimeters (mm)	

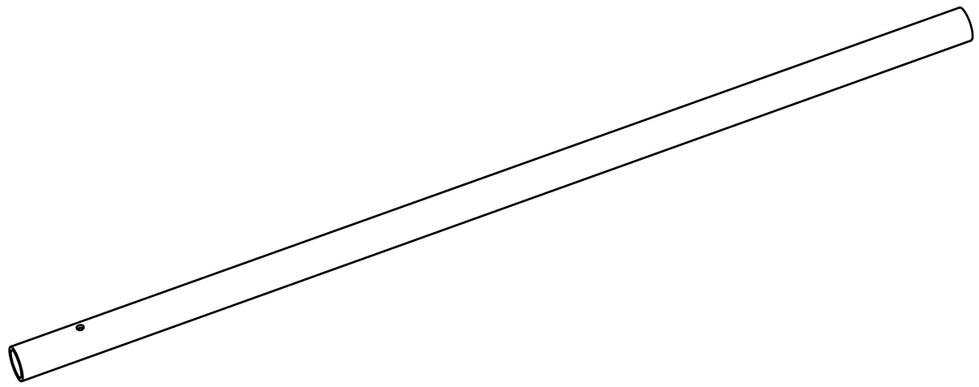

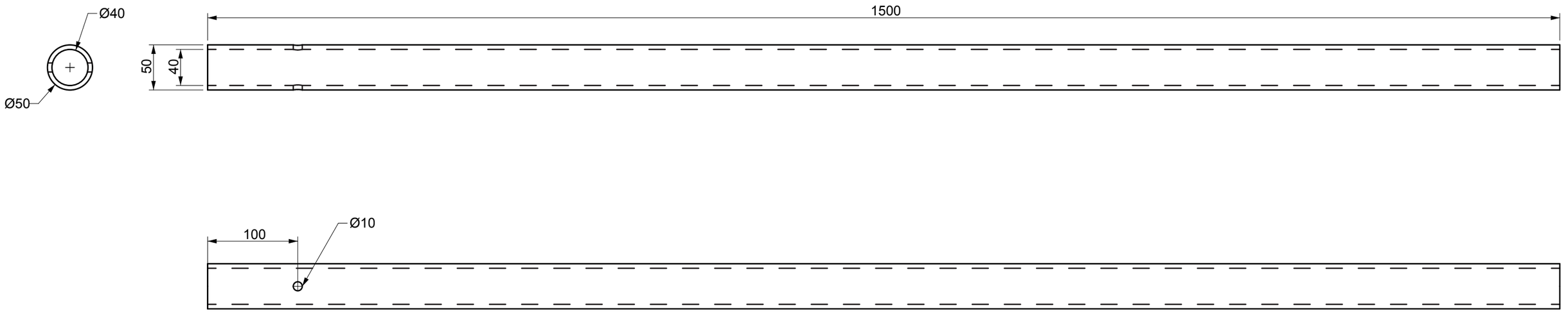

Project	Mobile Black Box	Part	06 - Standing pole (Bottom)
Concept	Semi-enclosed Mobile cinematic theater for film & video, virtual reality, serious gaming and media	Design	Lam Fung
Scale	1:1	* All dimension measured in millimeters (mm)	

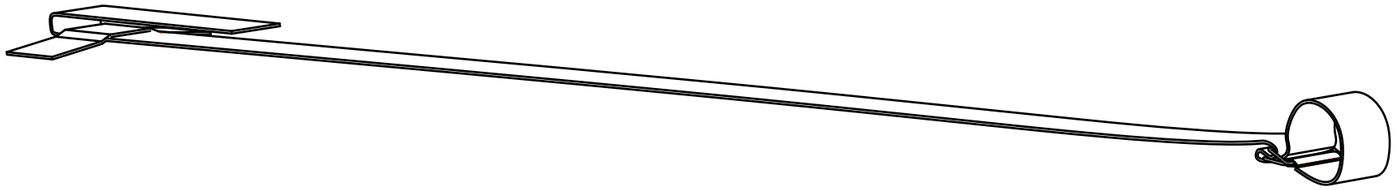

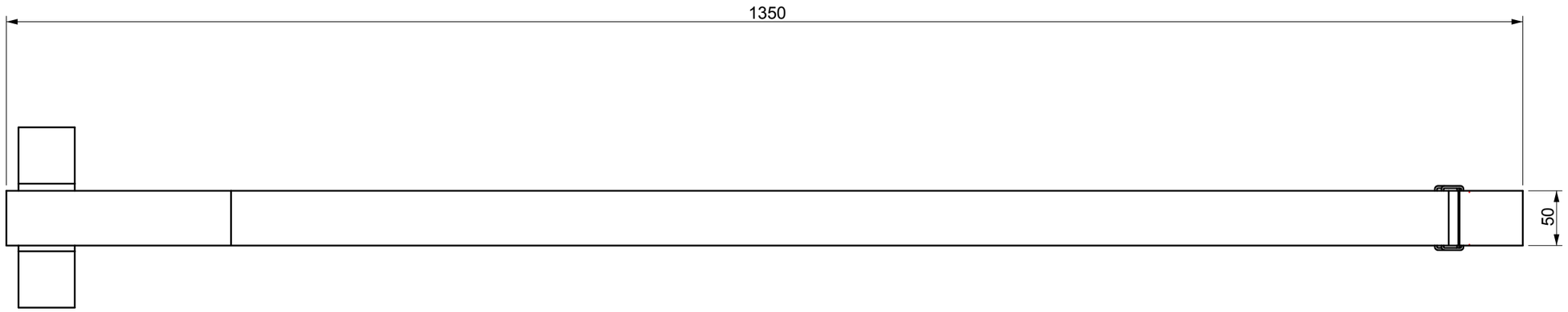



Project	Mobile Black Box	Part	07 - Hanging Side Strap
Concept	Semi-enclosed Mobile cinematic theater for film & video, virtual reality, serious gaming and media	Design	Lam Fung
Scale	1:1	* All dimension measured in millimeters (mm)	

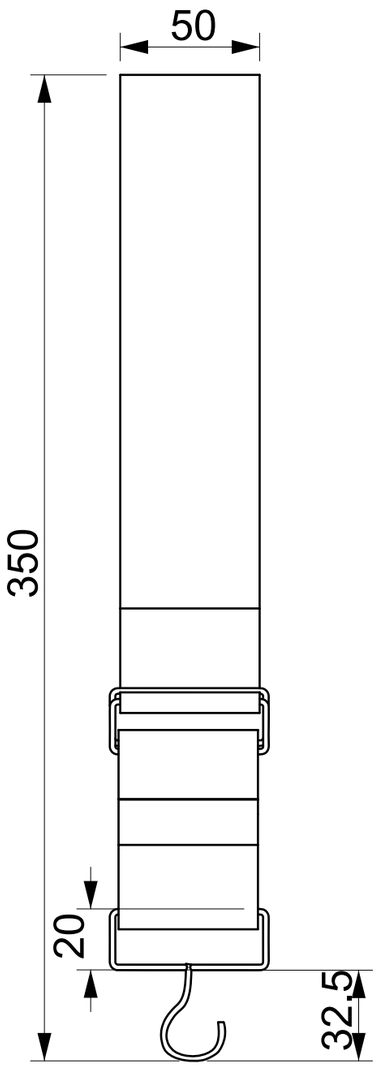

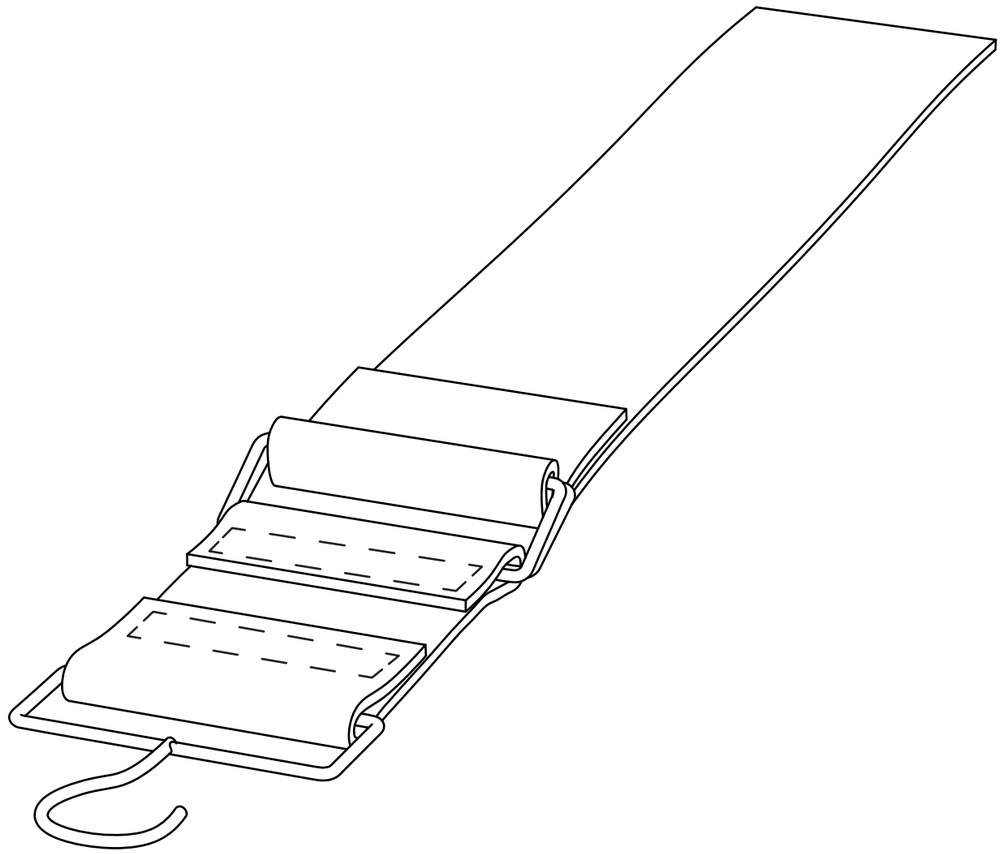

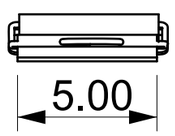

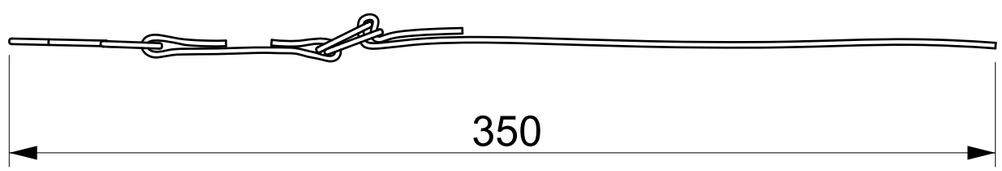

Project	Mobile Black Box	Part	08 - Side Strap
Concept	Semi-enclosed Mobile cinematic theater for film & video, virtual reality, serious gaming and media	Design	Lam Fung
Scale	1:1	* All dimension measured in millimeters (mm)	

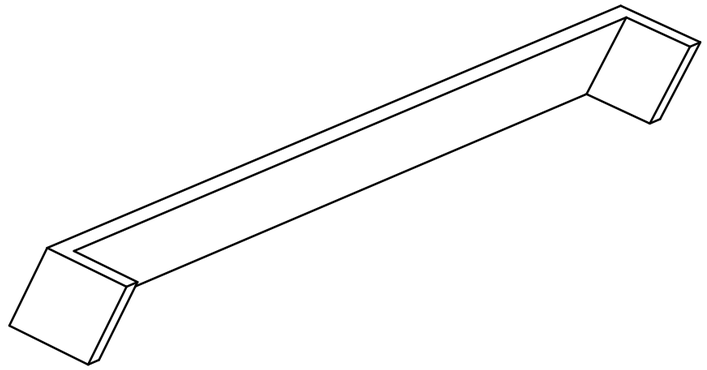

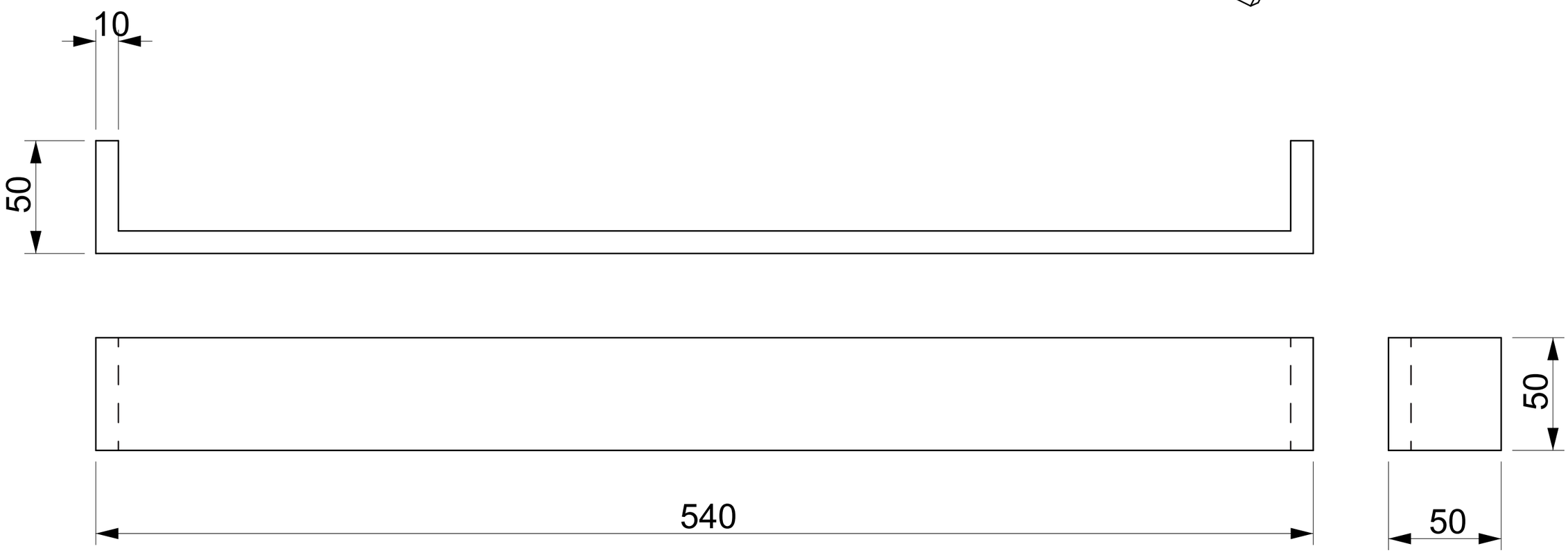

Project	Mobile Black Box	Part	09 - Projector Holder Insert
Concept	Semi-enclosed Mobile cinematic theater for film & video, virtual reality, serious gaming and media	Design	Lam Fung
Scale	1:2	* All dimension measured in millimeters (mm)	

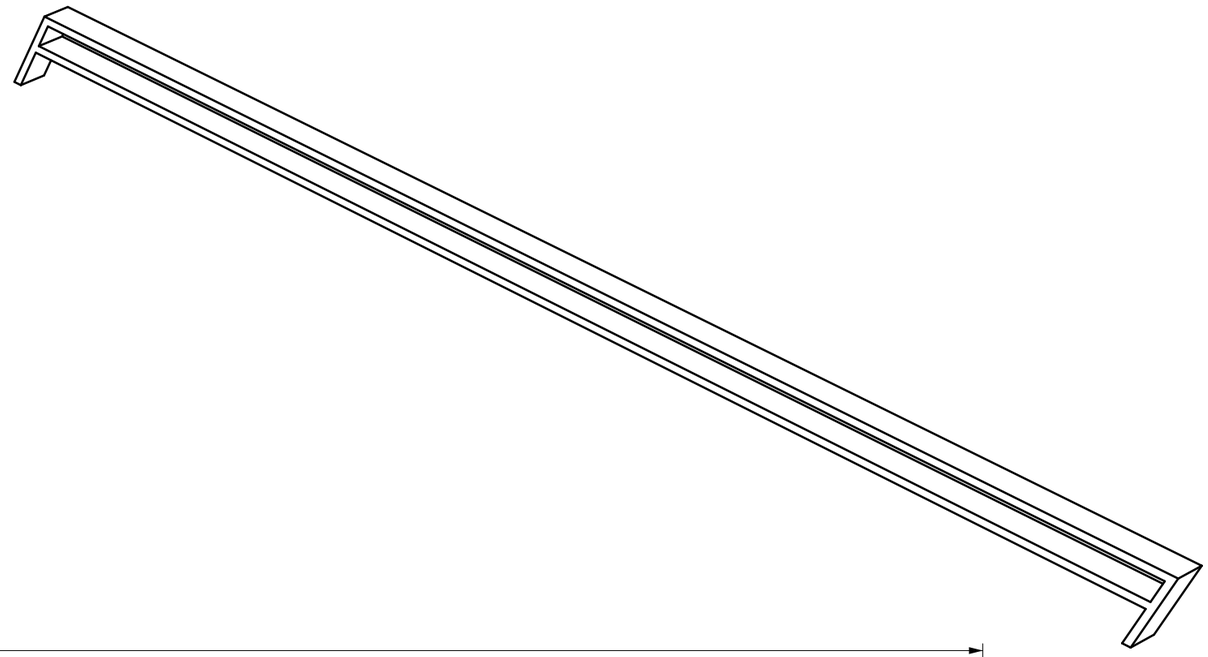

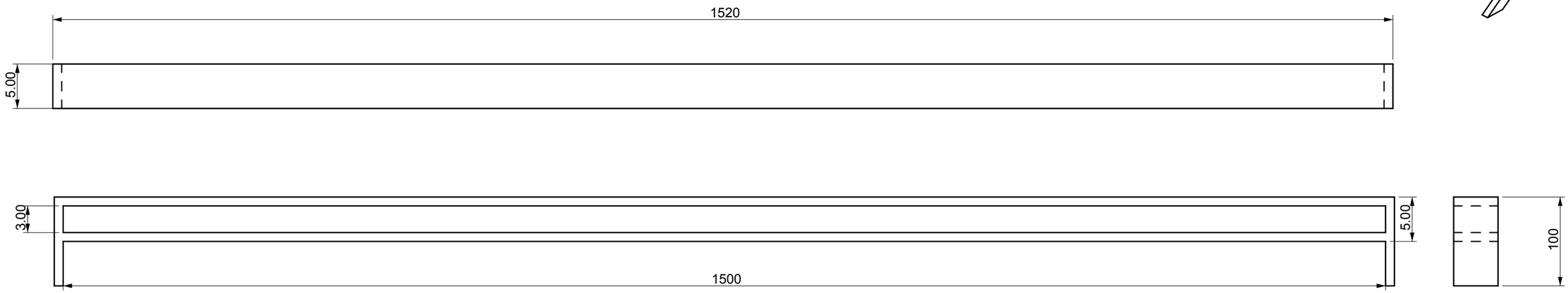

Project	Mobile Black Box	Part	10 - Projector Holder
Concept	Semi-enclosed Mobile cinematic theater for film & video, virtual reality, serious gaming and media	Design	Lam Fung
Scale	1:3	* All dimension measured in millimeters (mm)	

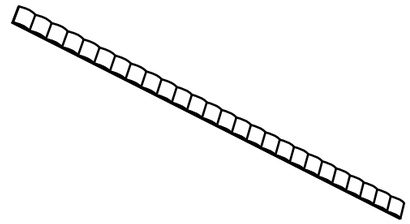



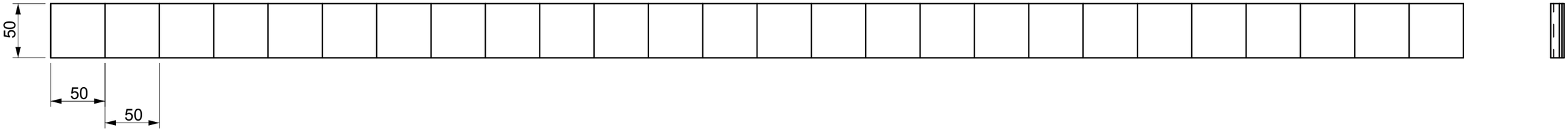

Project	Mobile Black Box	Part	11 - Multi-purpose mounting point
Concept	Semi-enclosed Mobile cinematic theater for film & video, virtual reality, serious gaming and media	Design	Lam Fung
Scale	1:3	* All dimension measured in millimeters (mm)	

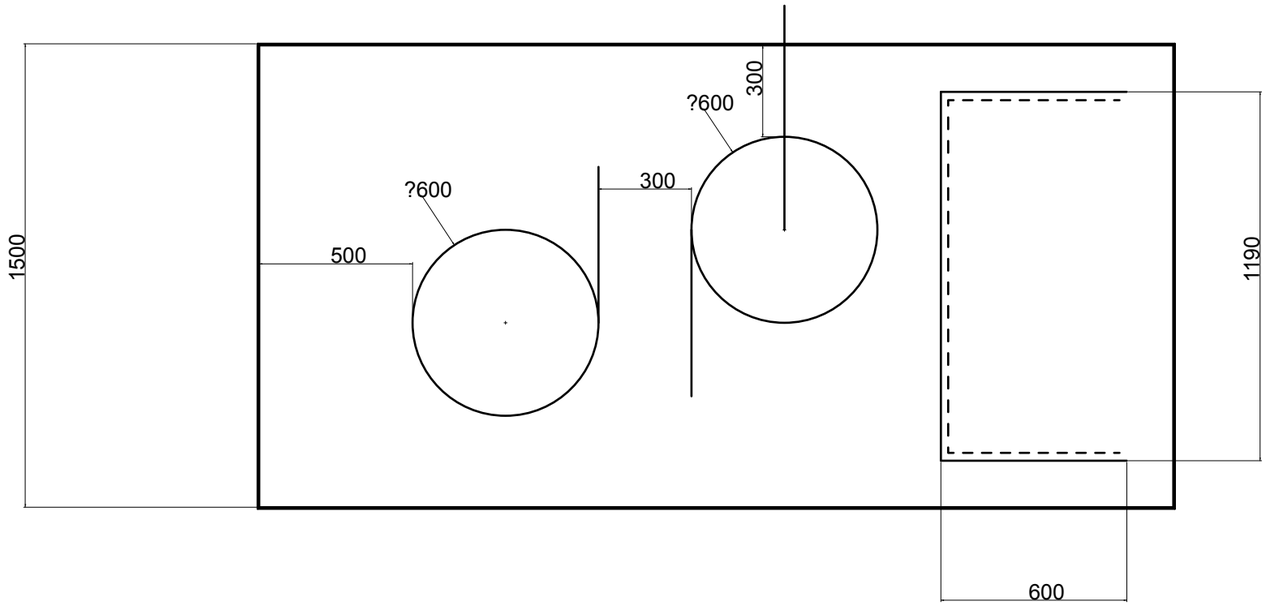

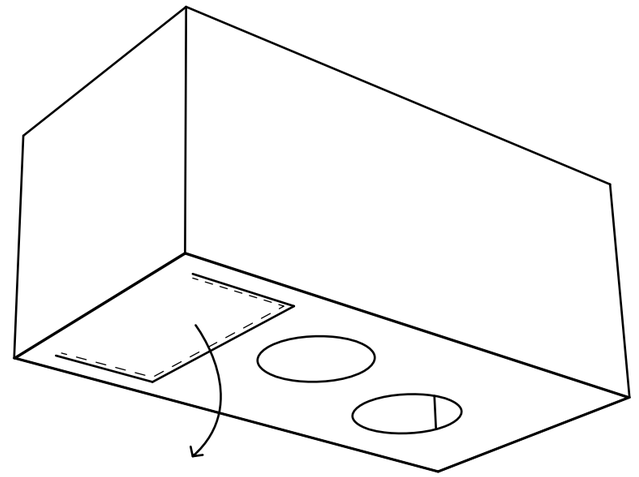

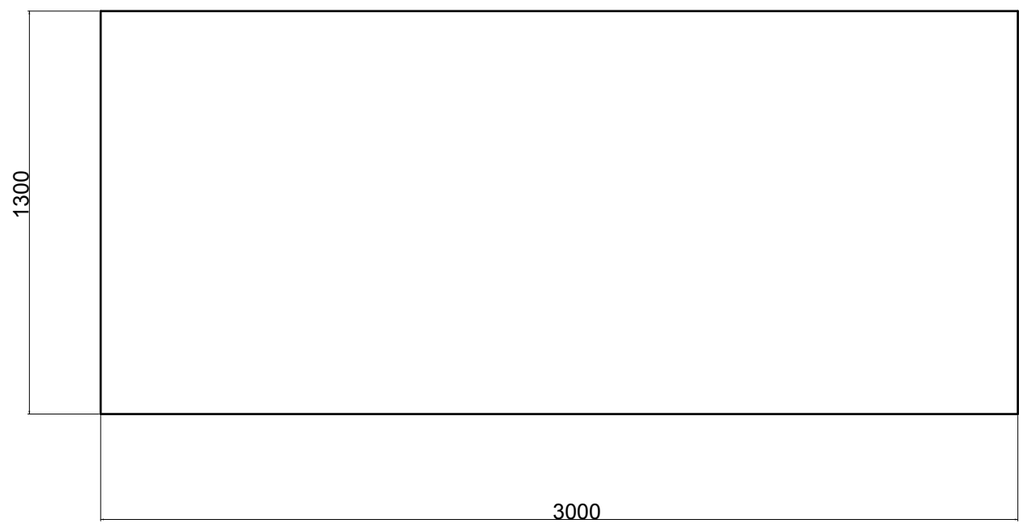

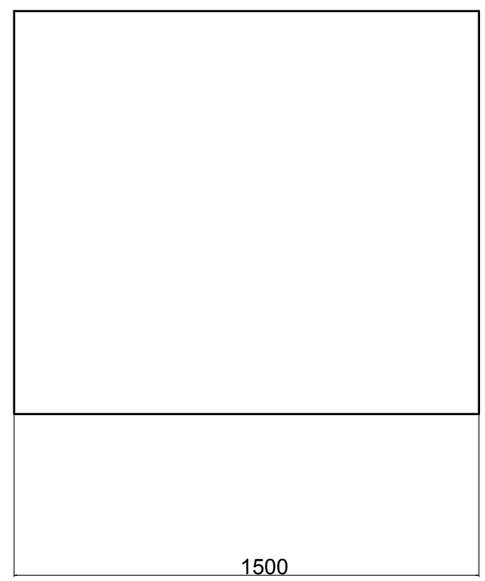

Project	Mobile Black Box	Part	12 - Theater Box
Concept	Semi-enclosed Mobile cinematic theater for film & video, virtual reality, serious gaming and media	Design	Lam Fung
Scale	1:4	* All dimension measured in millimeters (mm)	



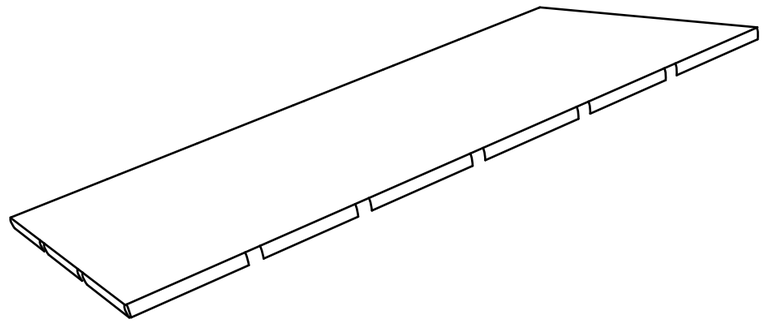

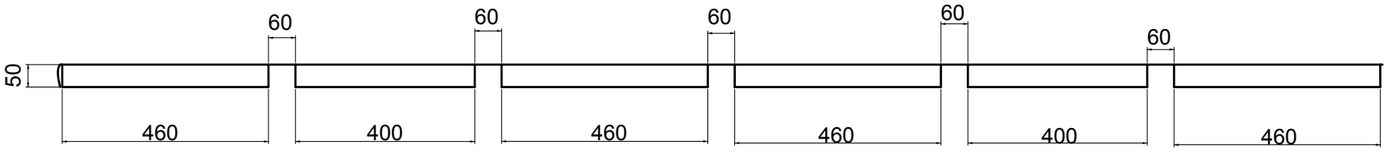

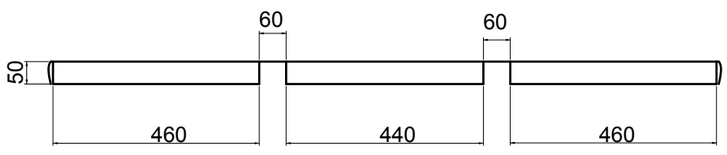

Project	Mobile Black Box	Part	13 - Theater Box Top Cover
Concept	Semi-enclosed Mobile cinematic theater for film & video, virtual reality, serious gaming and media	Design	Lam Fung
Scale	1:3	* All dimension measured in millimeters (mm)	

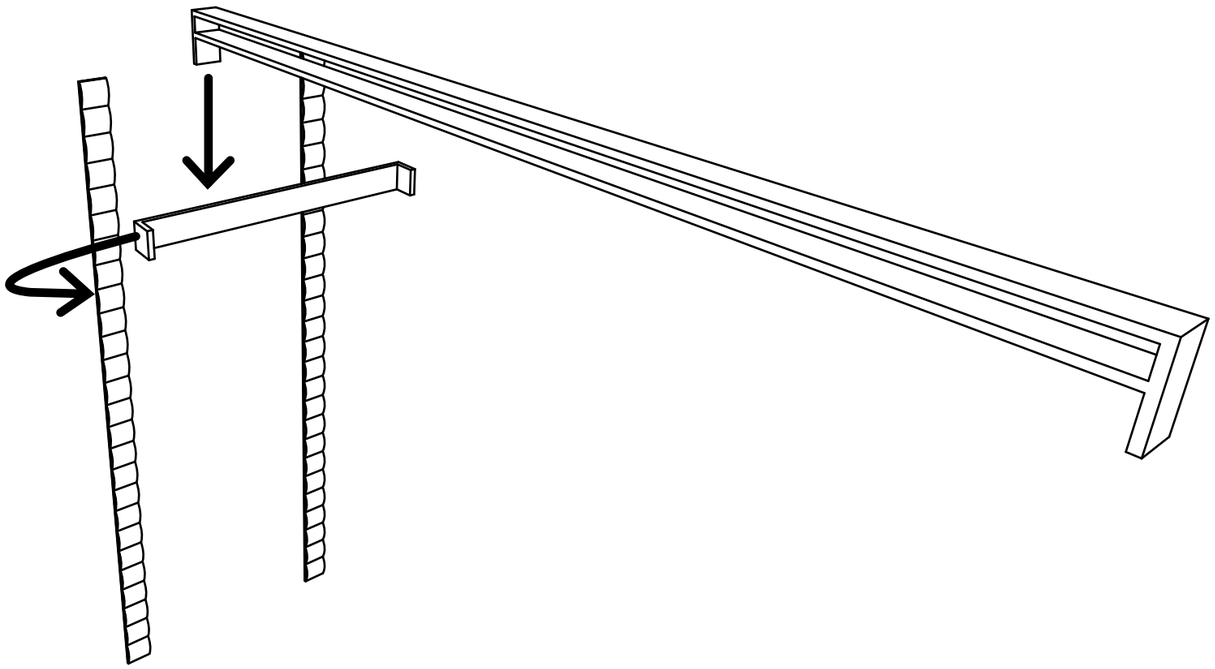

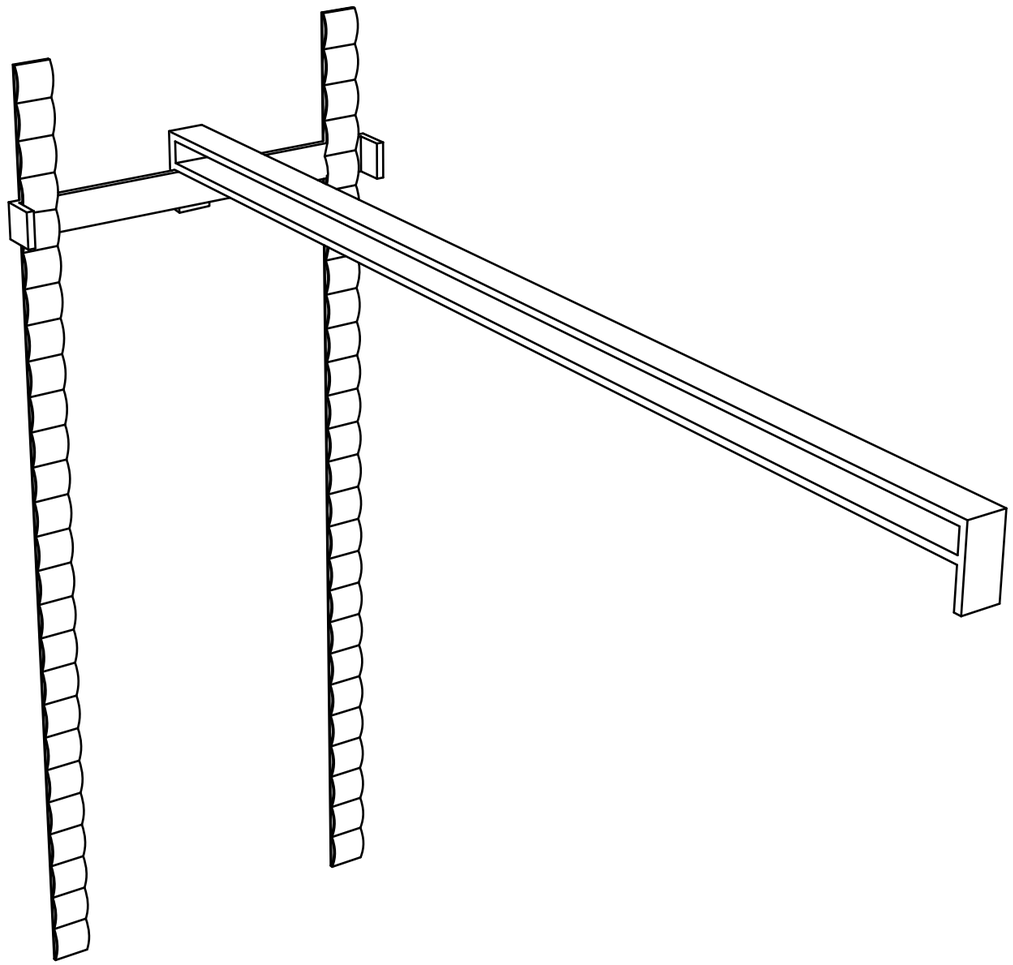

Project	Mobile Black Box	Part	Assembly 01 - Projector mounting
Concept	Semi-enclosed Mobile cinematic theater for film & video, virtual reality, serious gaming and media	Design	Lam Fung
Scale	1:5	* All dimension measured in millimeters (mm)	

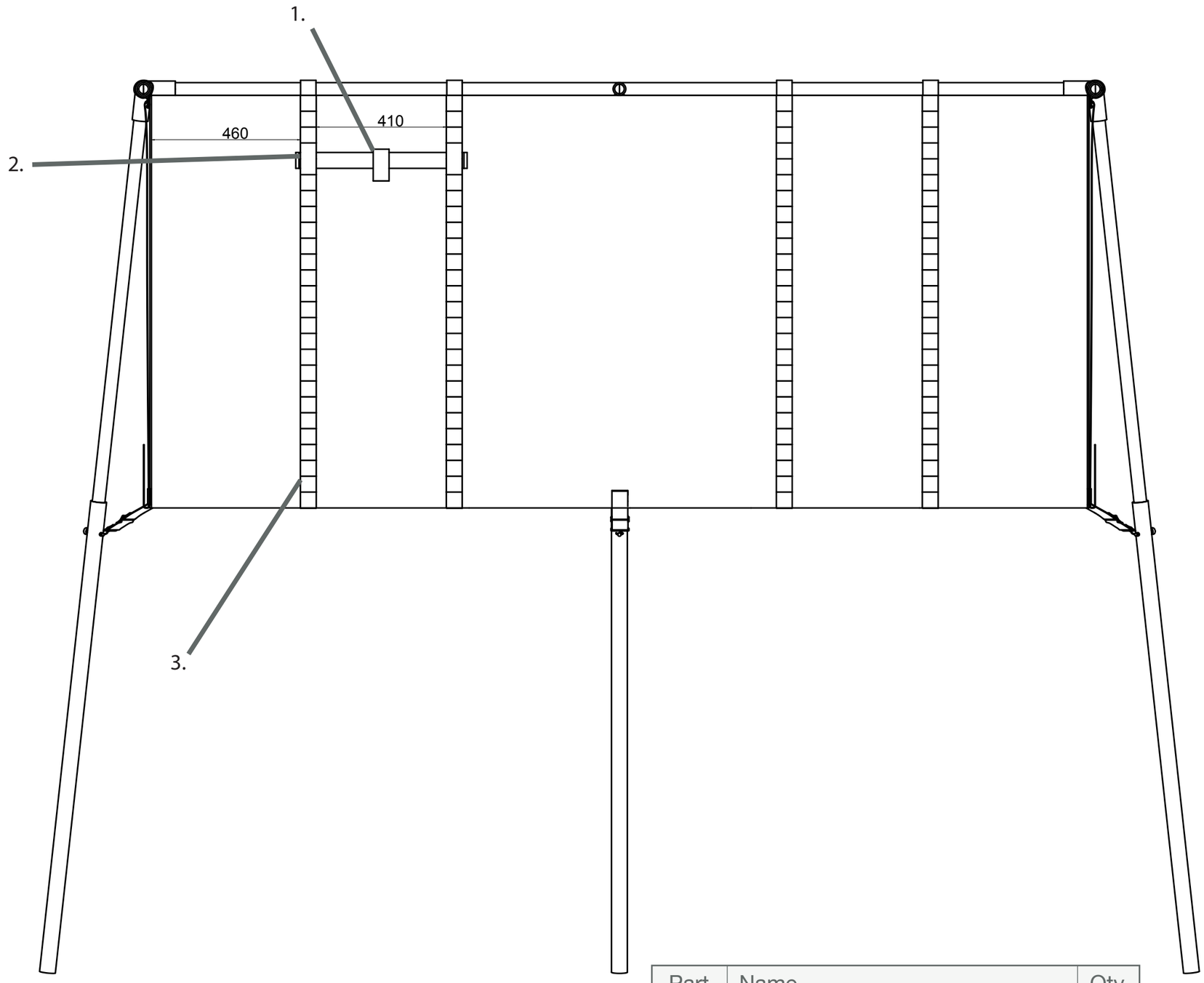

Part	Name	Qty
01.	Projector Holder	1
02.	Projector Holder Insert	2
03.	Multi-purpose Mounting Point	12

Project	Mobile Black Box	Part	Assembly 02 - Interior Side View
Concept	Semi-enclosed Mobile cinematic theater for film & video, virtual reality, serious gaming and media	Design	Lam Fung
Scale	1:3	* All dimension measured in millimeters (mm)	

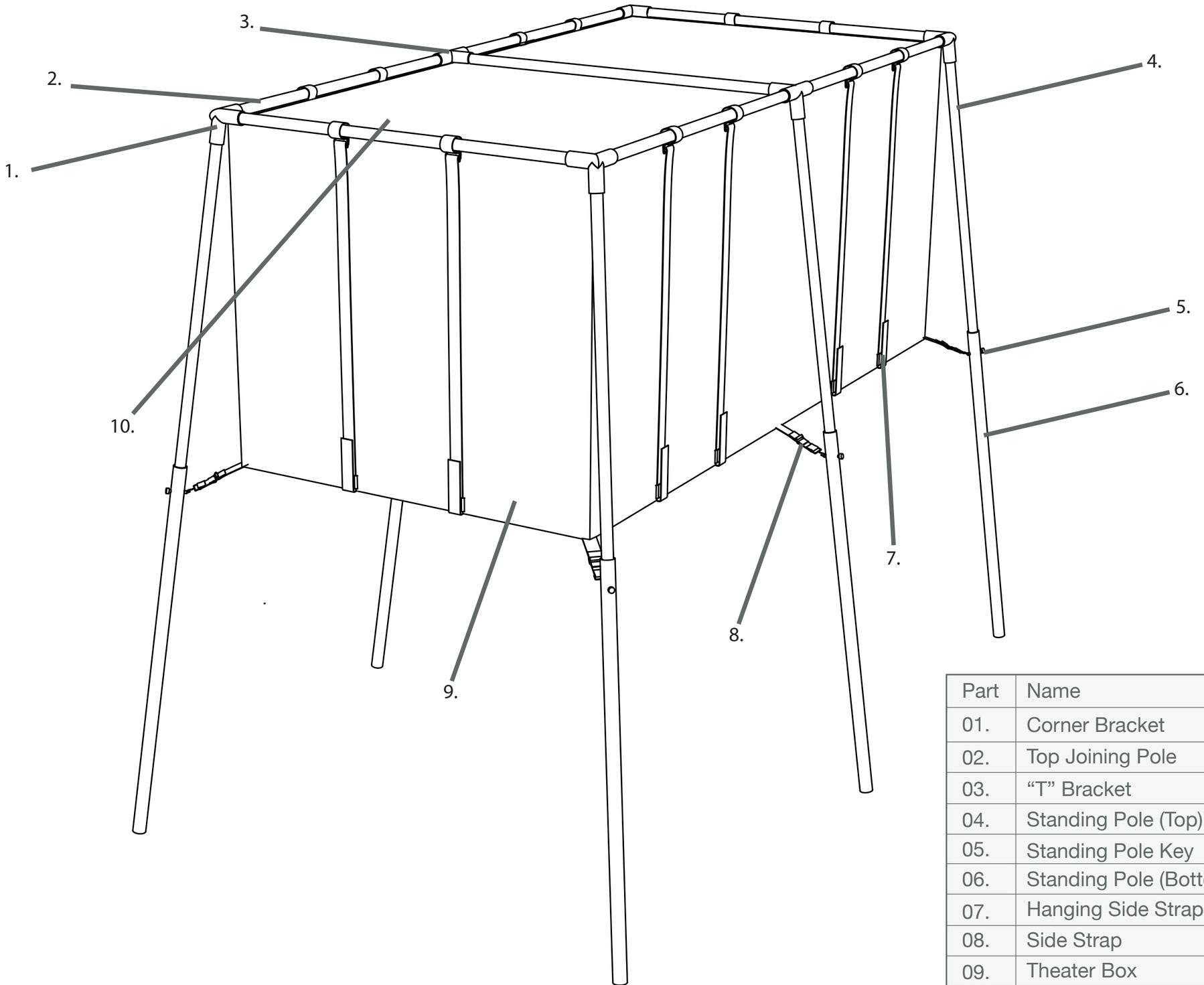

Part	Name	Qty
01.	Corner Bracket	4
02.	Top Joining Pole	6
03.	“T” Bracket	2
04.	Standing Pole (Top)	6
05.	Standing Pole Key	6
06.	Standing Pole (Bottom)	6
07.	Hanging Side Strap	12
08.	Side Strap	6
09.	Theater Box	1
10.	Theater Box Cover	1

Project	Mobile Black Box	Part	Assembly 03 - Mobile Black Box
Concept	Semi-enclosed Mobile cinematic theater for film & video, virtual reality, serious gaming and media	Design	Lam Fung
Scale	1:4	* All dimension measured in millimeters (mm)	

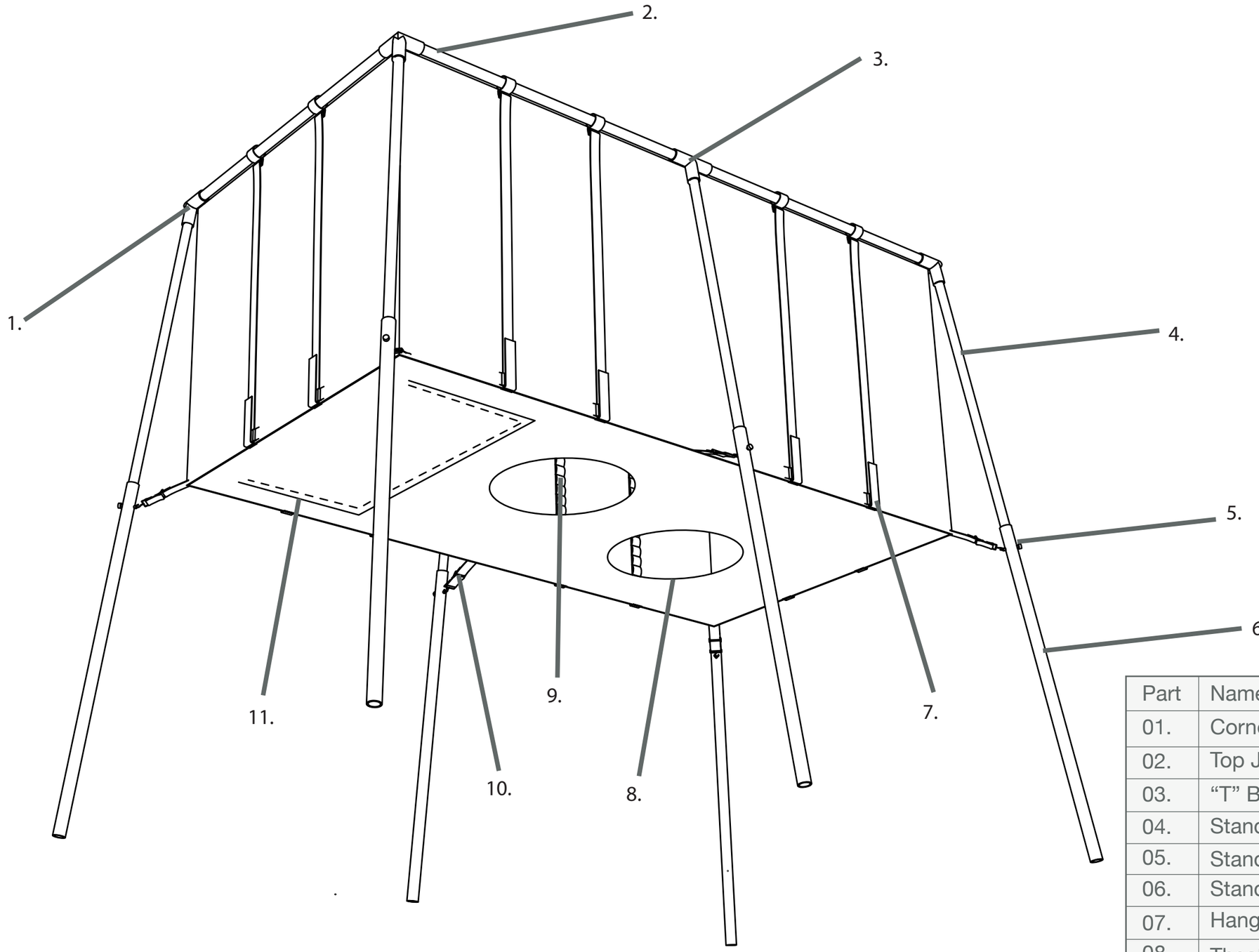

Part	Name	Qty
01.	Corner Bracket	4
02.	Top Joining Pole	6
03.	“T” Bracket	2
04.	Standing Pole (Top)	6
05.	Standing Pole Key	6
06.	Standing Pole (Bottom)	6
07.	Hanging Side Strap	12
08.	Theater Box Audience Access	2
09.	Multi-purpose Mounting Point	12
10.	Side Strap	6
11.	Theater Box Maintenance Access	1

Project	Mobile Black Box	Part	Assembly 04- Mobile Black Box (2)
Concept	Semi-enclosed Mobile cinematic theater for film & video, virtual reality, serious gaming and media	Design	Lam Fung
Scale	1:4	* All dimension measured in millimeters (mm)	

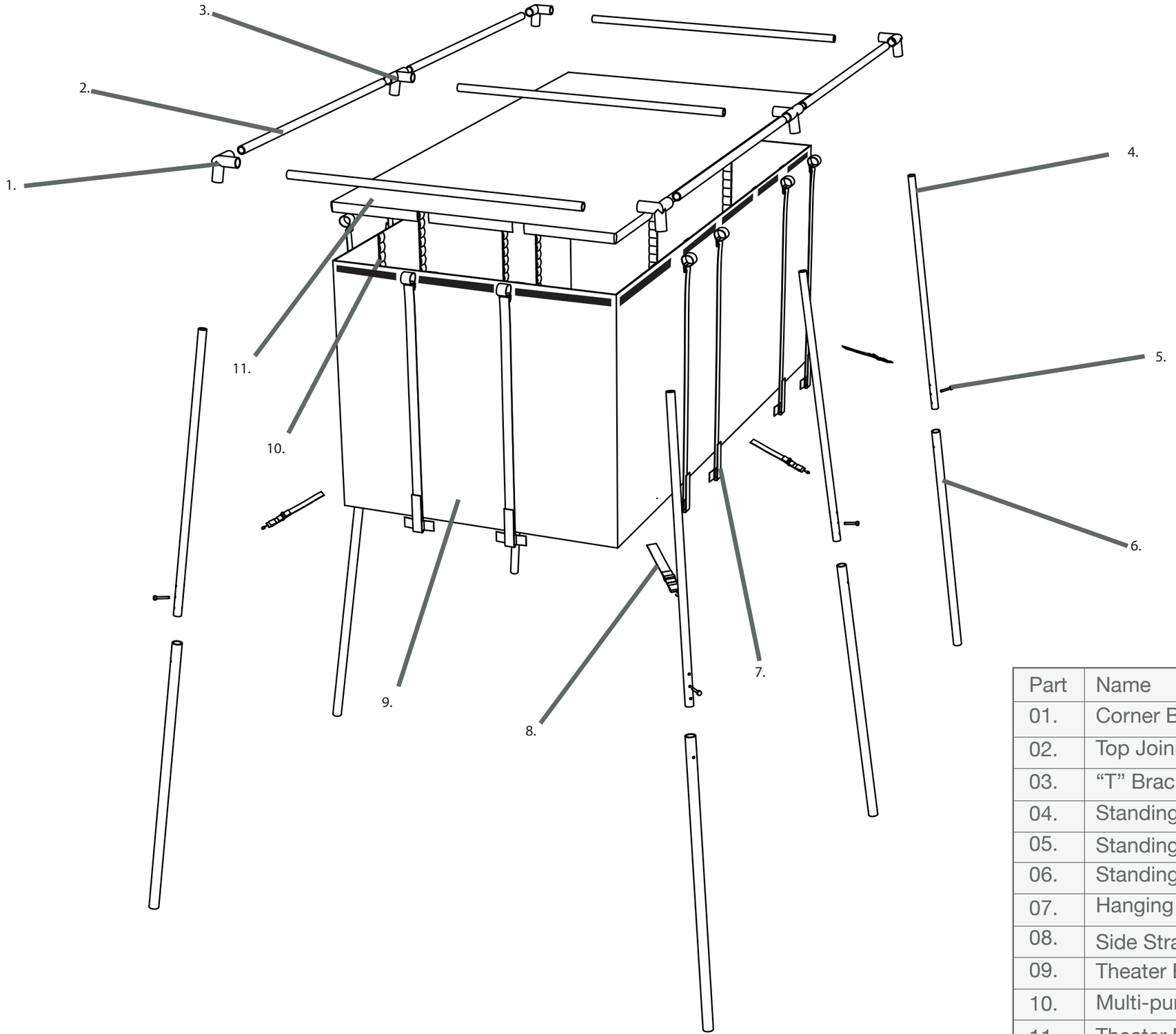

Part	Name	Qty
01.	Corner Bracket	4
02.	Top Joining Pole	6
03.	“T” Bracket	2
04.	Standing Pole (Top)	6
05.	Standing Pole Key	6
06.	Standing Pole (Bottom)	6
07.	Hanging Side Strap	12
08.	Side Strap	6
09.	Theater Box	1
10.	Multi-purpose Mounting Point	12
11.	Theater Box Cover	1

Project	Mobile Black Box	Part	Assembly 05 - Mobile Black Box (Exploded)
Concept	Semi-enclosed Mobile cinematic theater for film & video, virtual reality, serious gaming and media	Design	Lam Fung
Scale	1:4	* All dimension measured in millimeters (mm)	

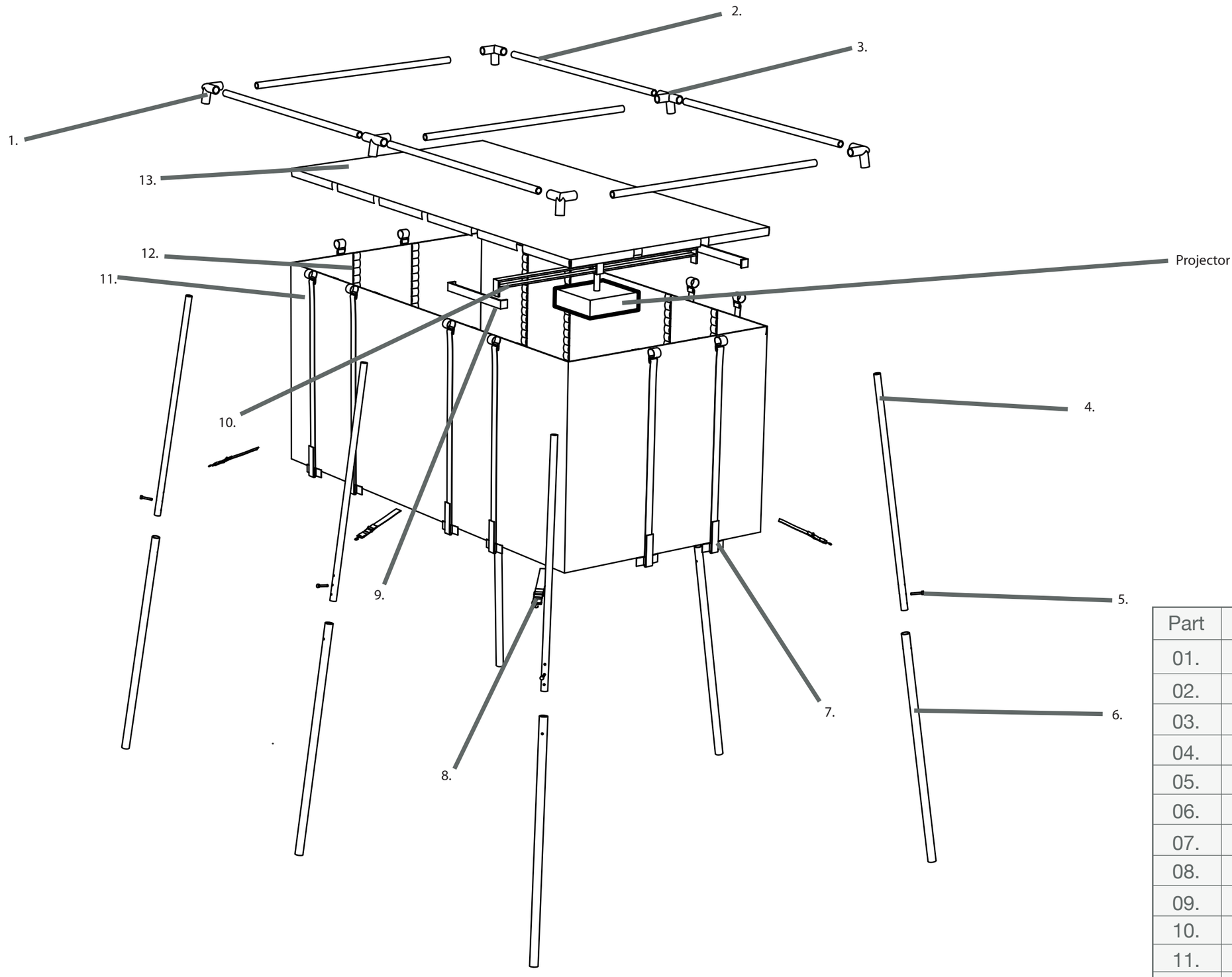

Part	Name	Qty
01.	Corner Bracket	4
02.	Top Joining Pole	6
03.	“T” Bracket	2
04.	Standing Pole (Top)	6
05.	Standing Pole Key	6
06.	Standing Pole (Bottom)	6
07.	Hanging Side Strap	12
08.	Side Strap	6
09.	Projector Holder Insert	2
10.	Projector Holder	1
11.	Theater Box	1
12.	Multi-purpose Mounting Point	12
13.	Theater Box Cover	1

Project	Mobile Black Box	Part	Assembly 06 - Mobile Black Box (Exploded2)
Concept	Semi-enclosed Mobile cinematic theater for film & video, virtual reality, serious gaming and media	Design	Lam Fung
Scale	1:4	* All dimension measured in millimeters (mm)	