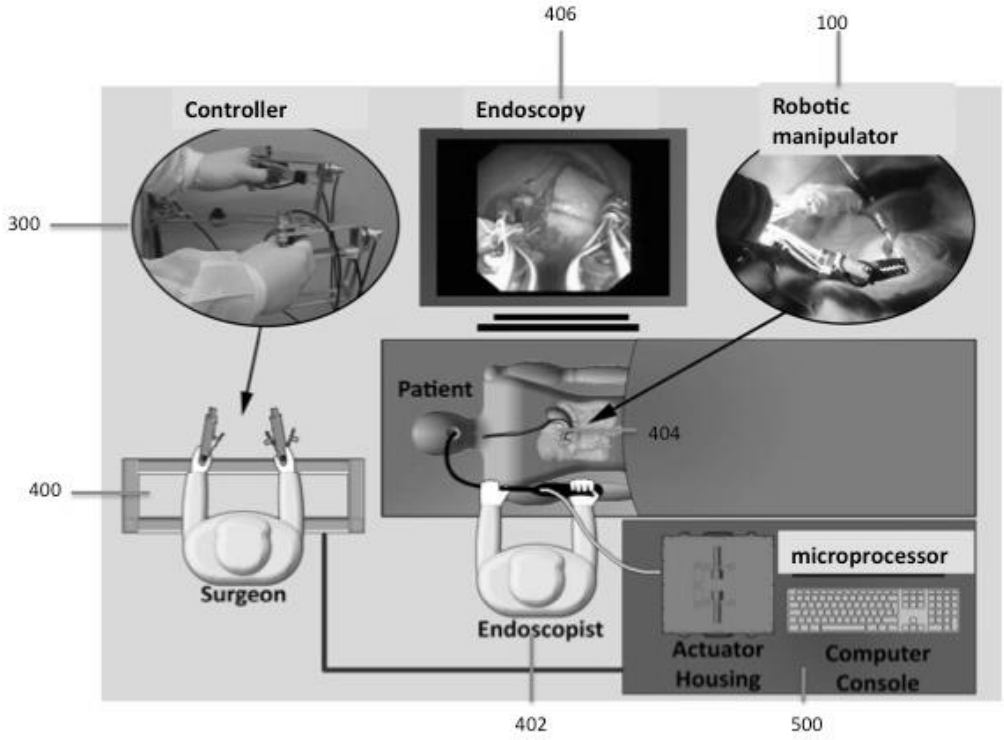

Figure 1

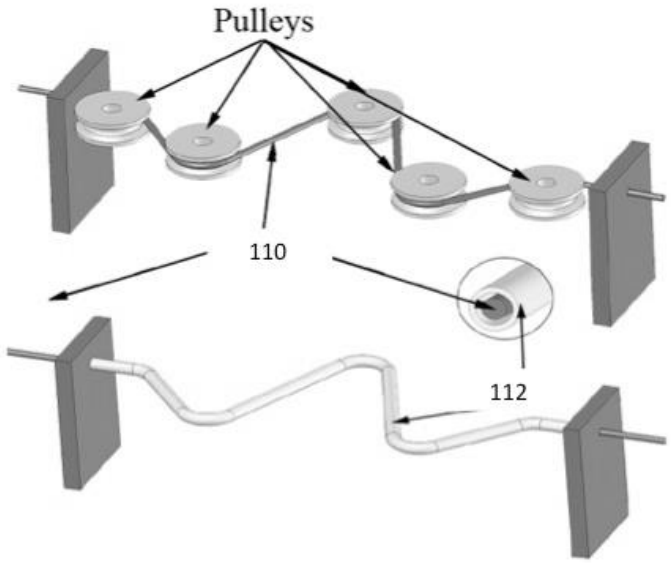

Figure 2

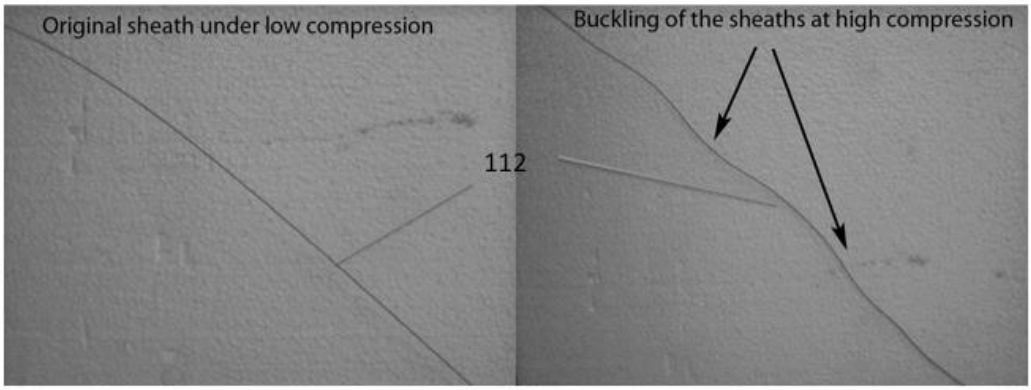

Figure 3

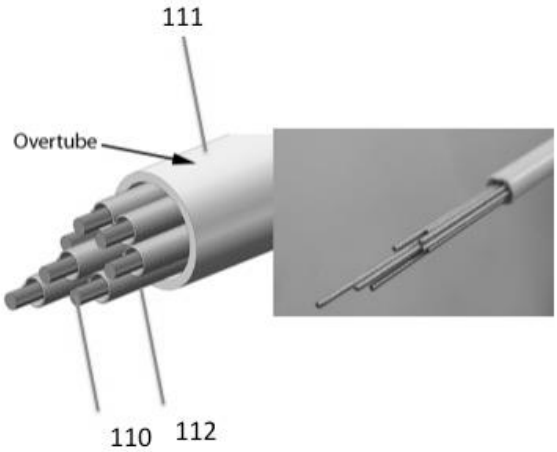

Figure 4

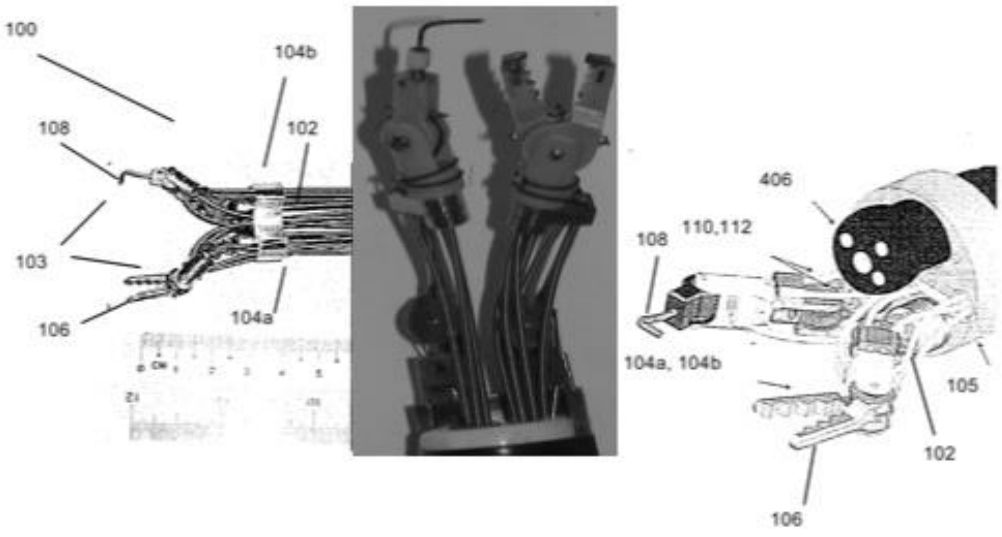

Figure 5

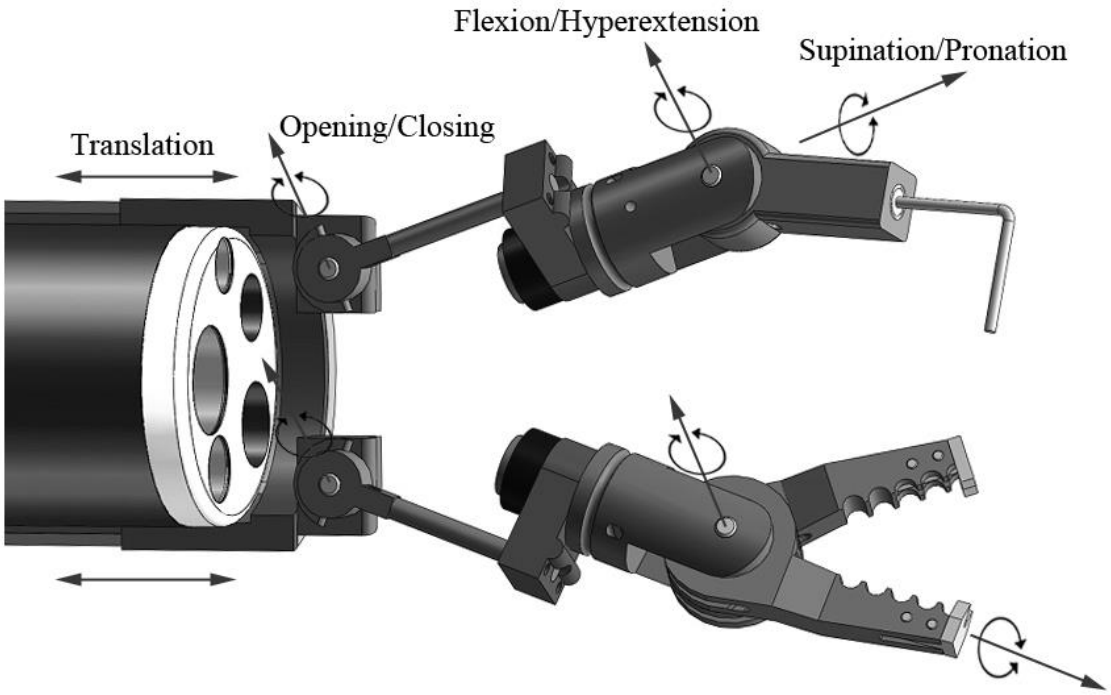

Figure 6

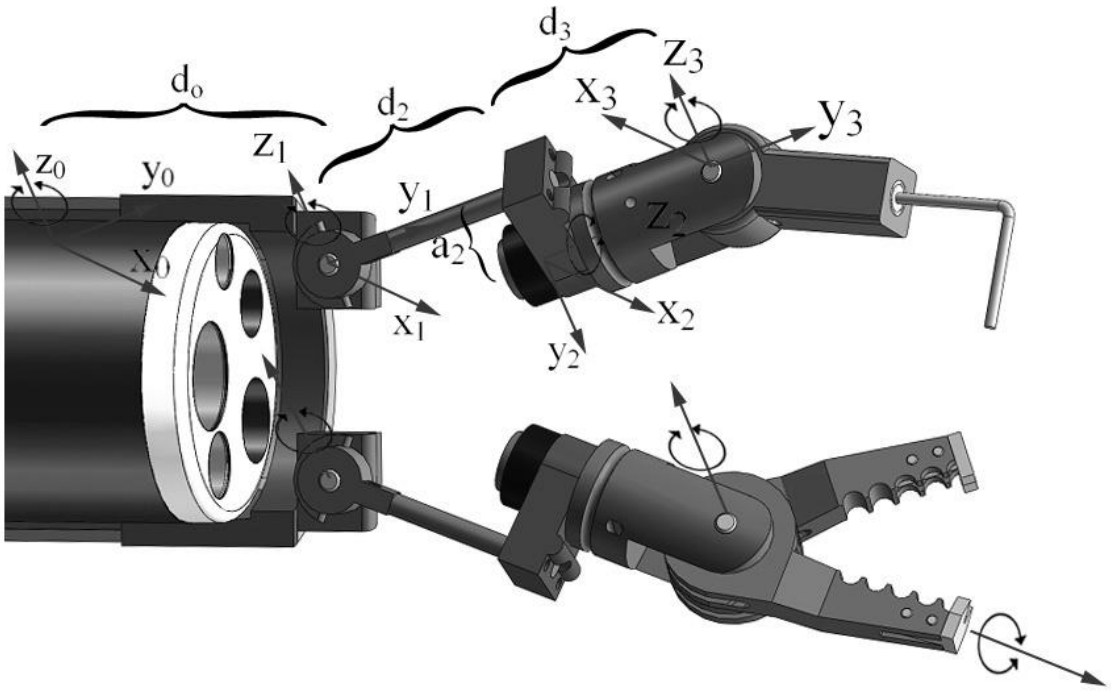

Figure 7

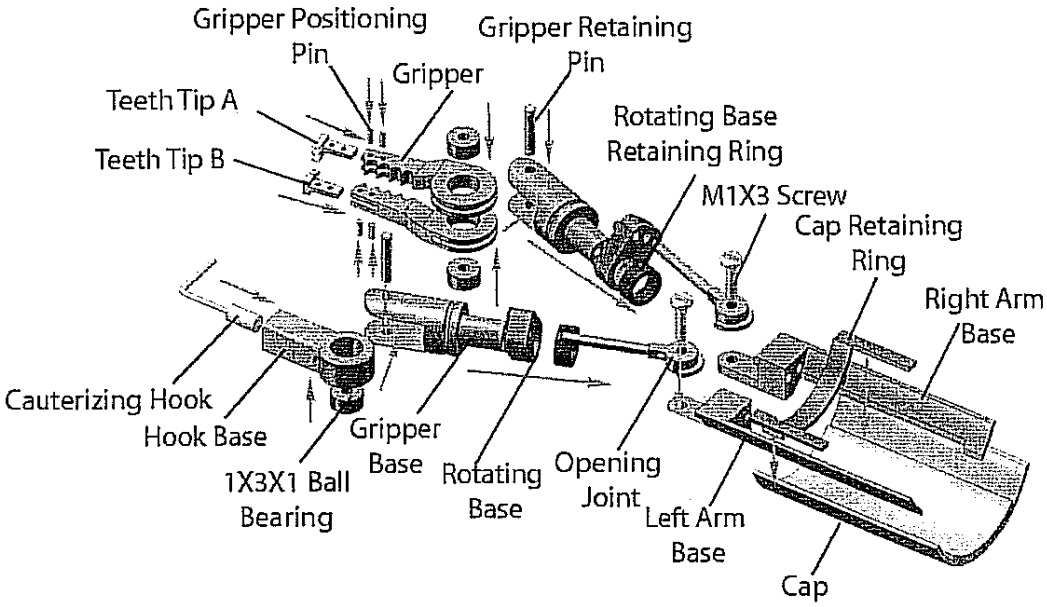

Figure 8

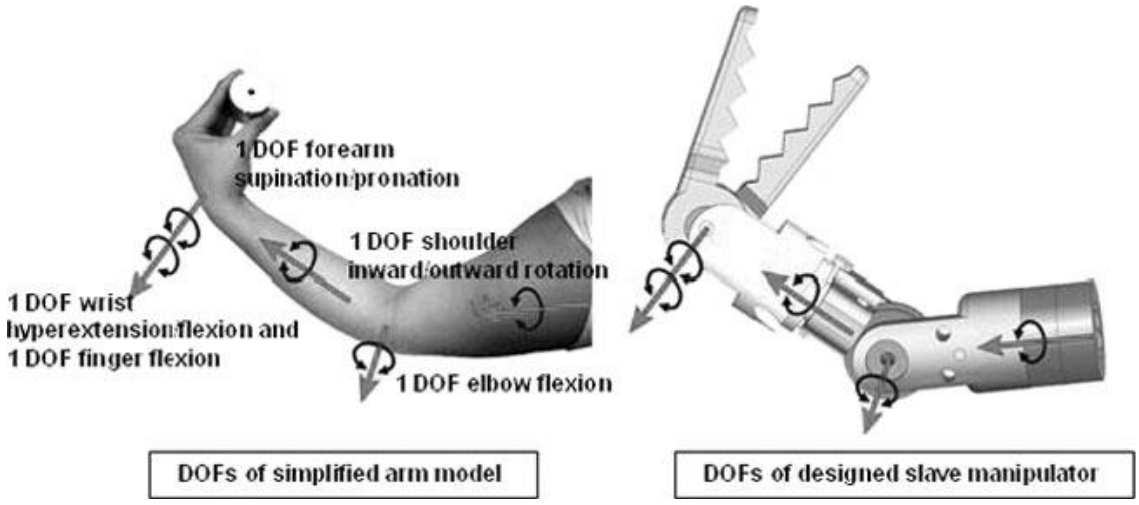

Figure 9

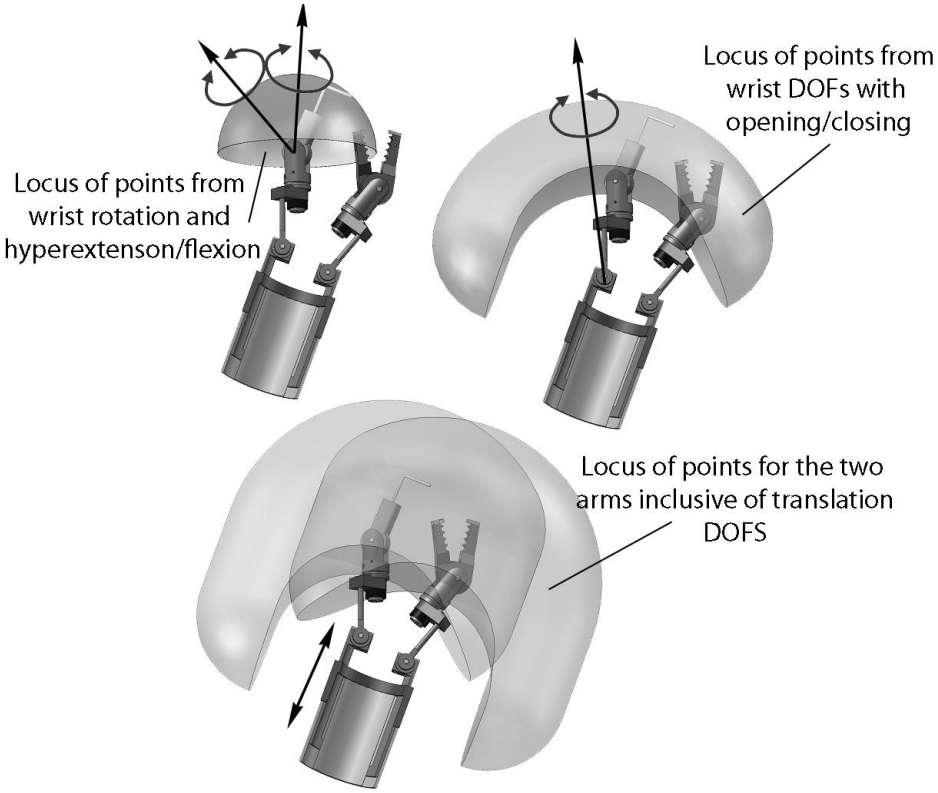

Figure 10

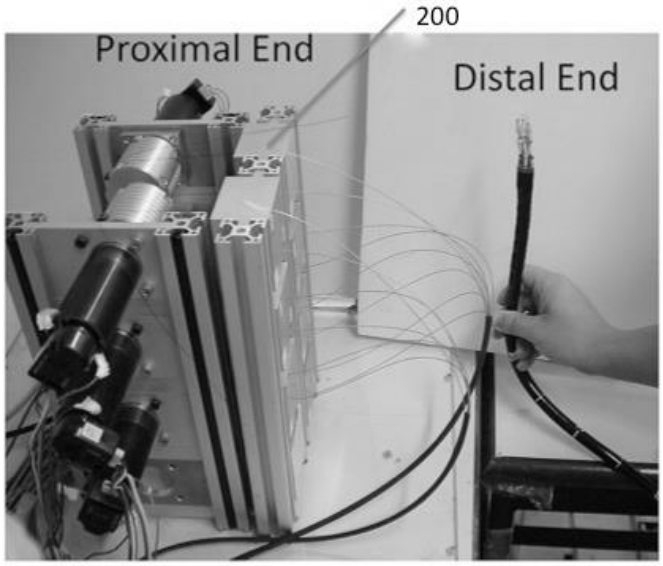

Figure 11

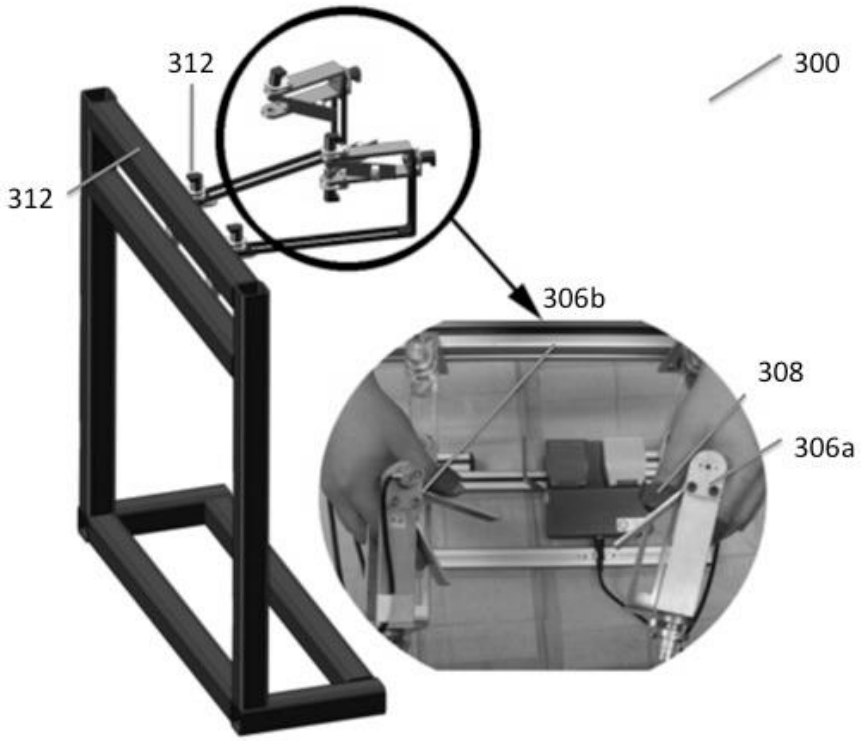

Figure 12

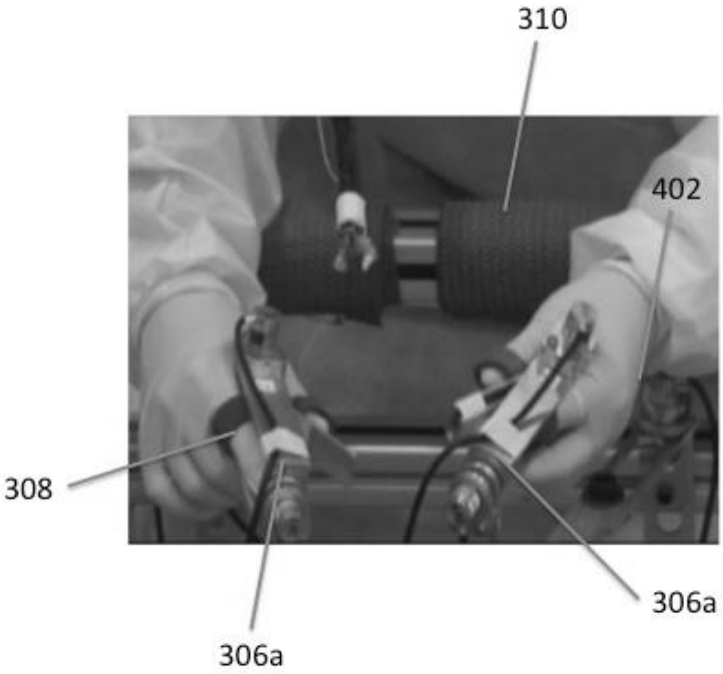

Figure 13

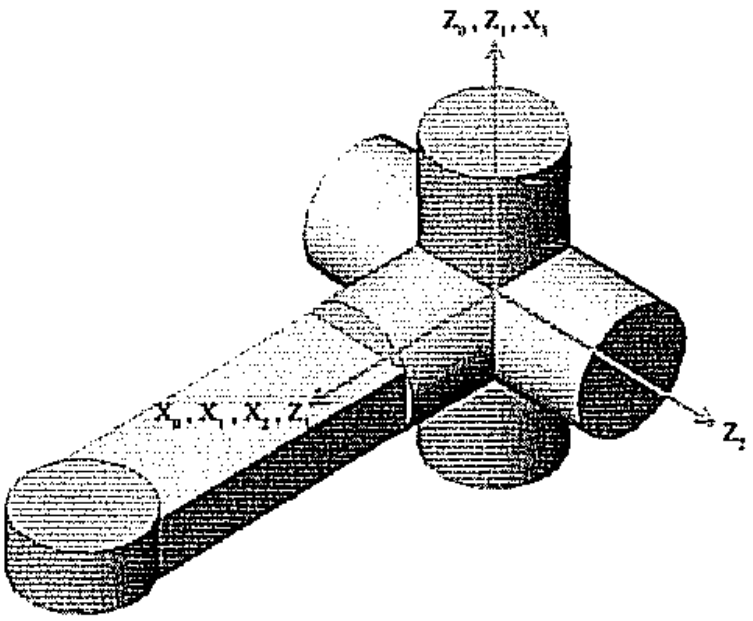

Figure 14

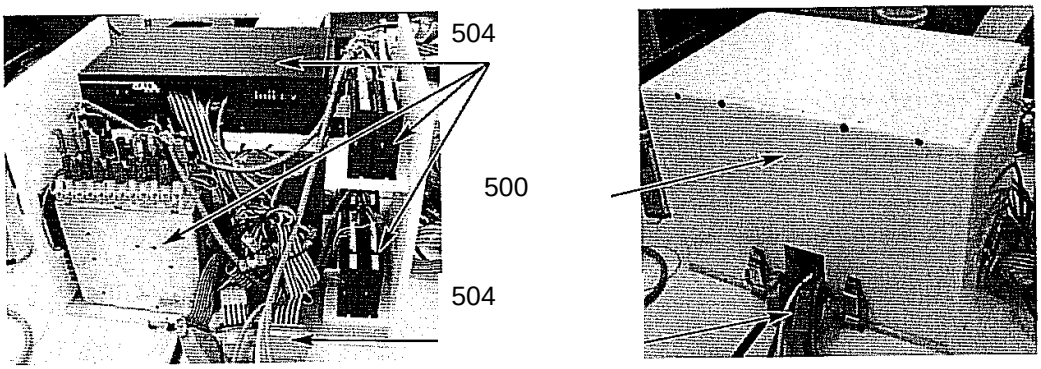

Figure 15

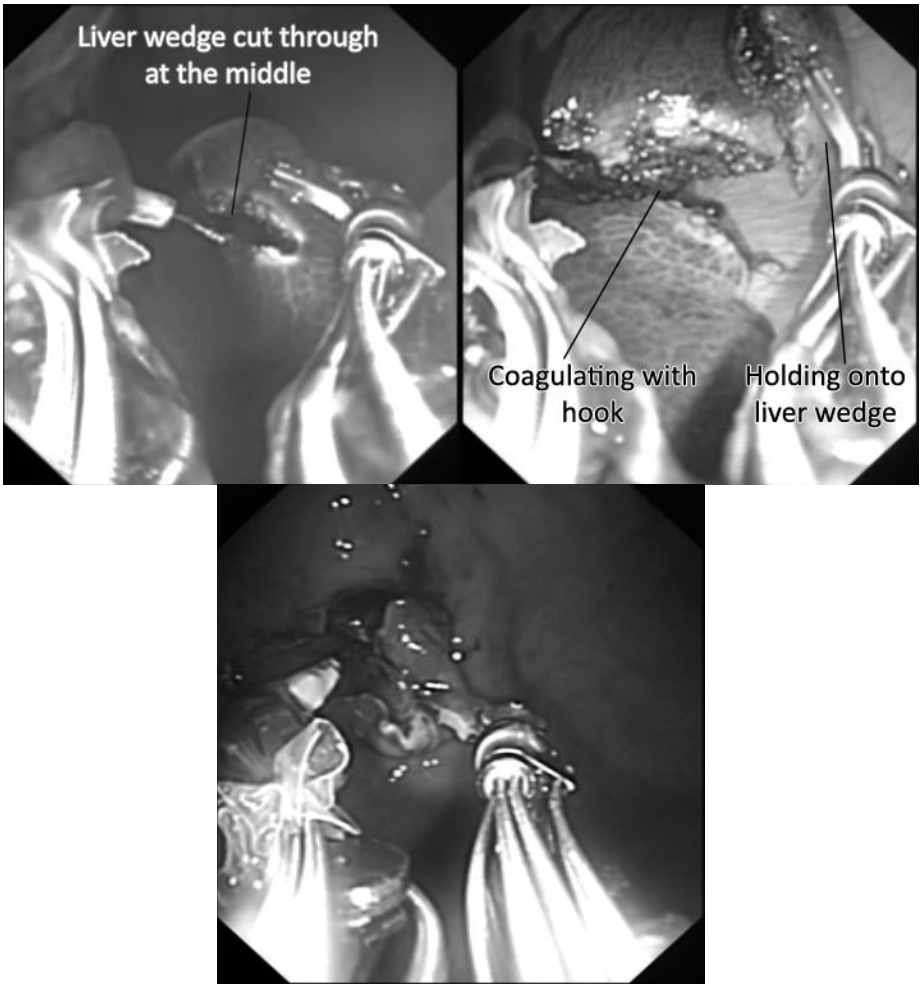
Liver wedge cut through at the middle
Coagulating with hook
Holding onto liver wedge

Figure 16

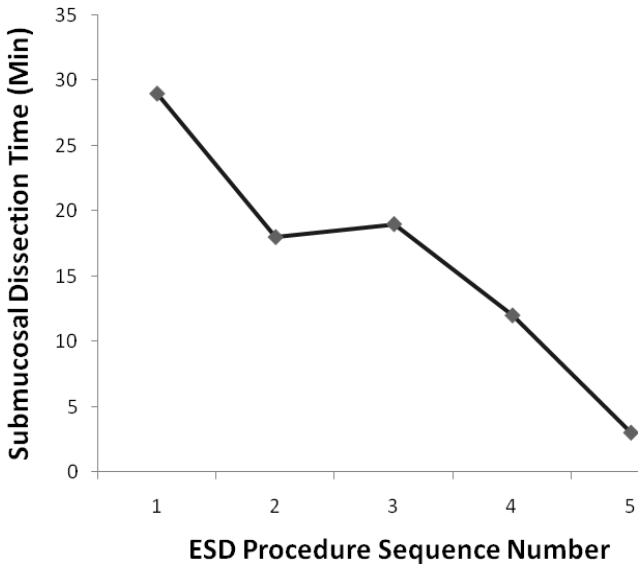
Submucosal Dissection Time (Min)
35
30
25
20
15
10
5
0
1
2
3
4
5
ESD Procedure Sequence Number

Figure 17



Figure 18



Figure 19

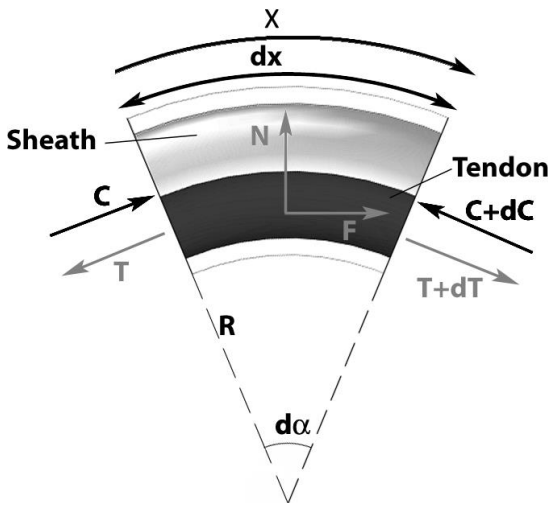

Figure 20

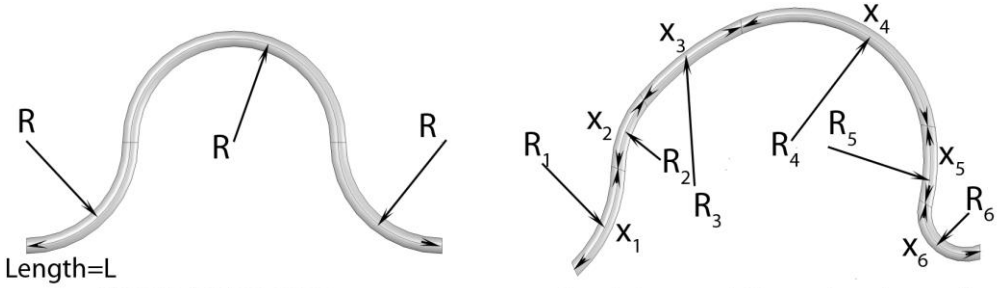

Figure 21

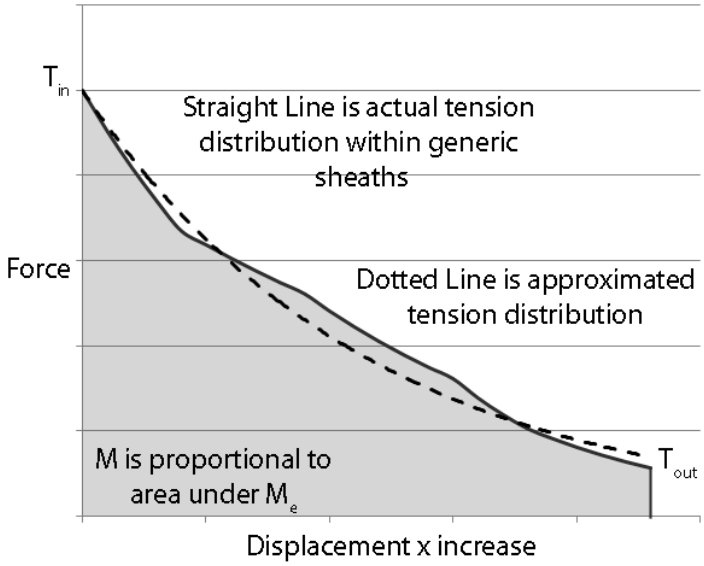

Figure 22



Figure 23

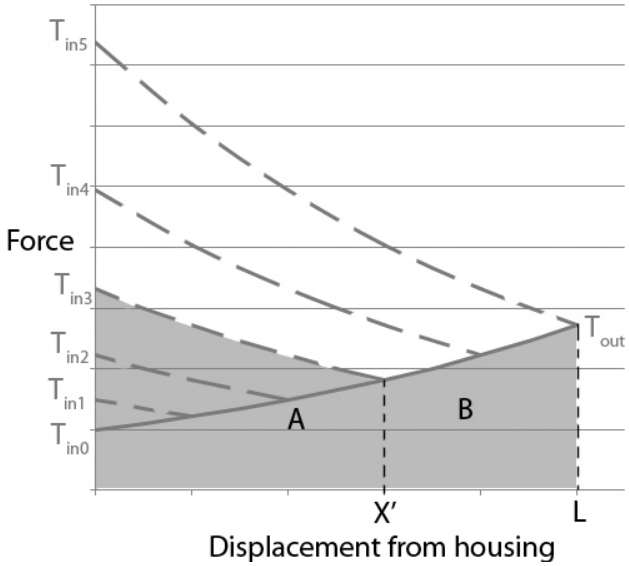

Figure 24

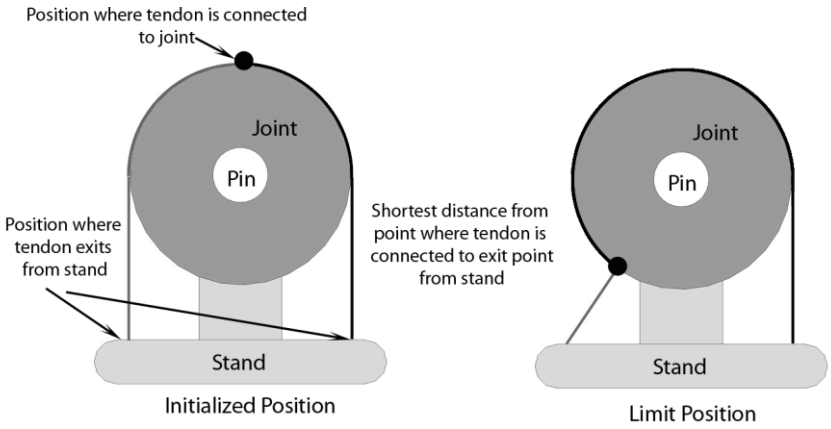

Figure 25

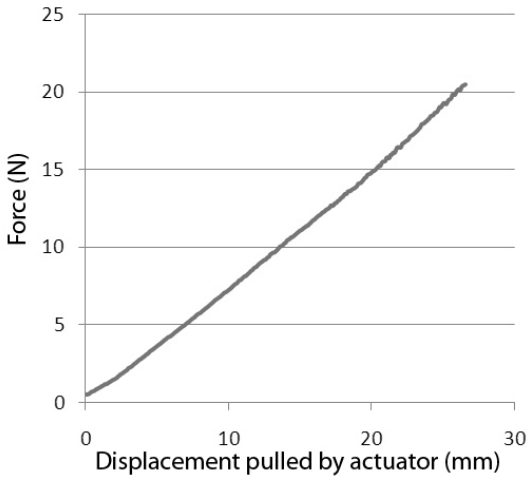

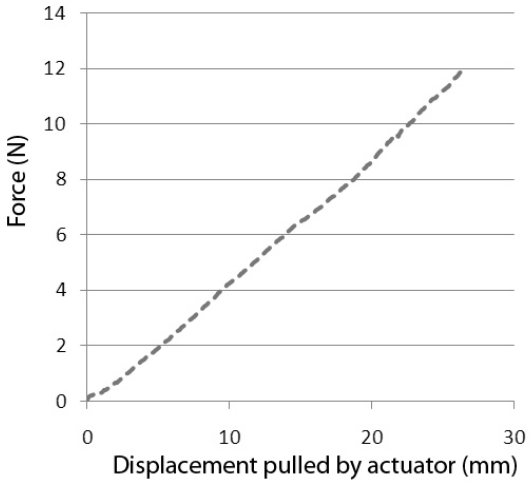

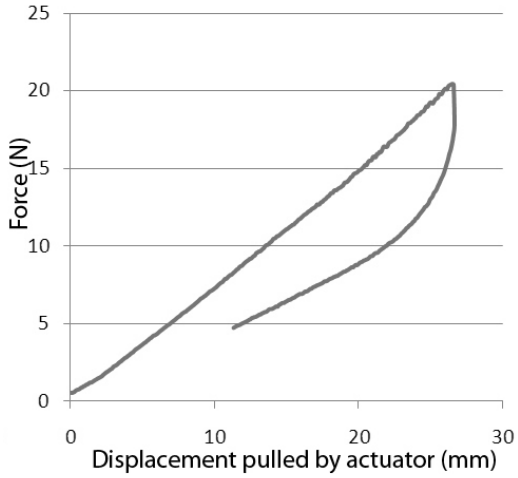

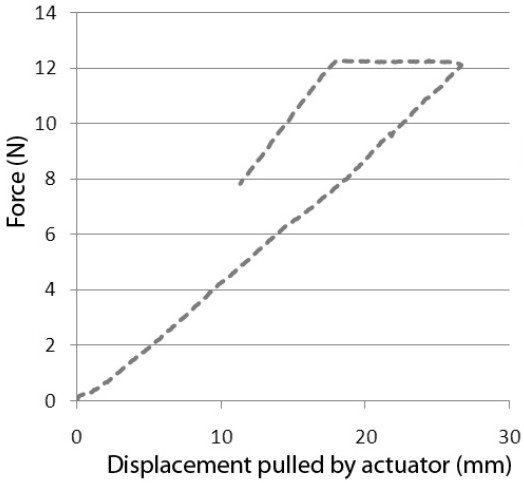

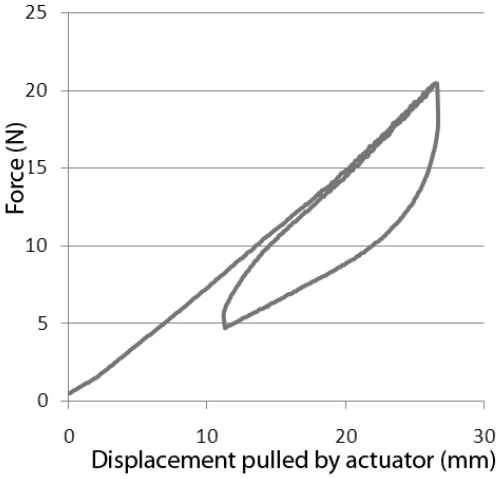

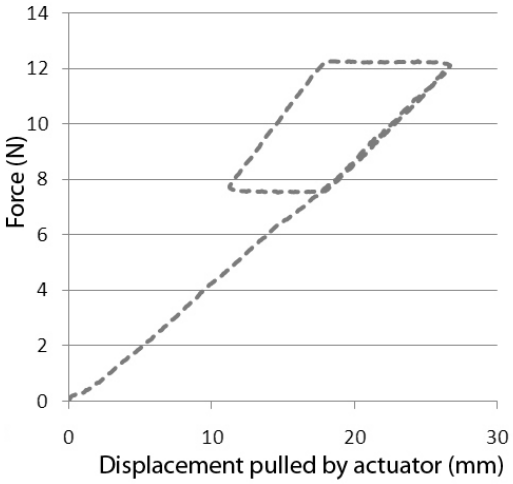

The three phases of recorded housing force

The corresponding three phases of the recorded end effector force

Figure 26

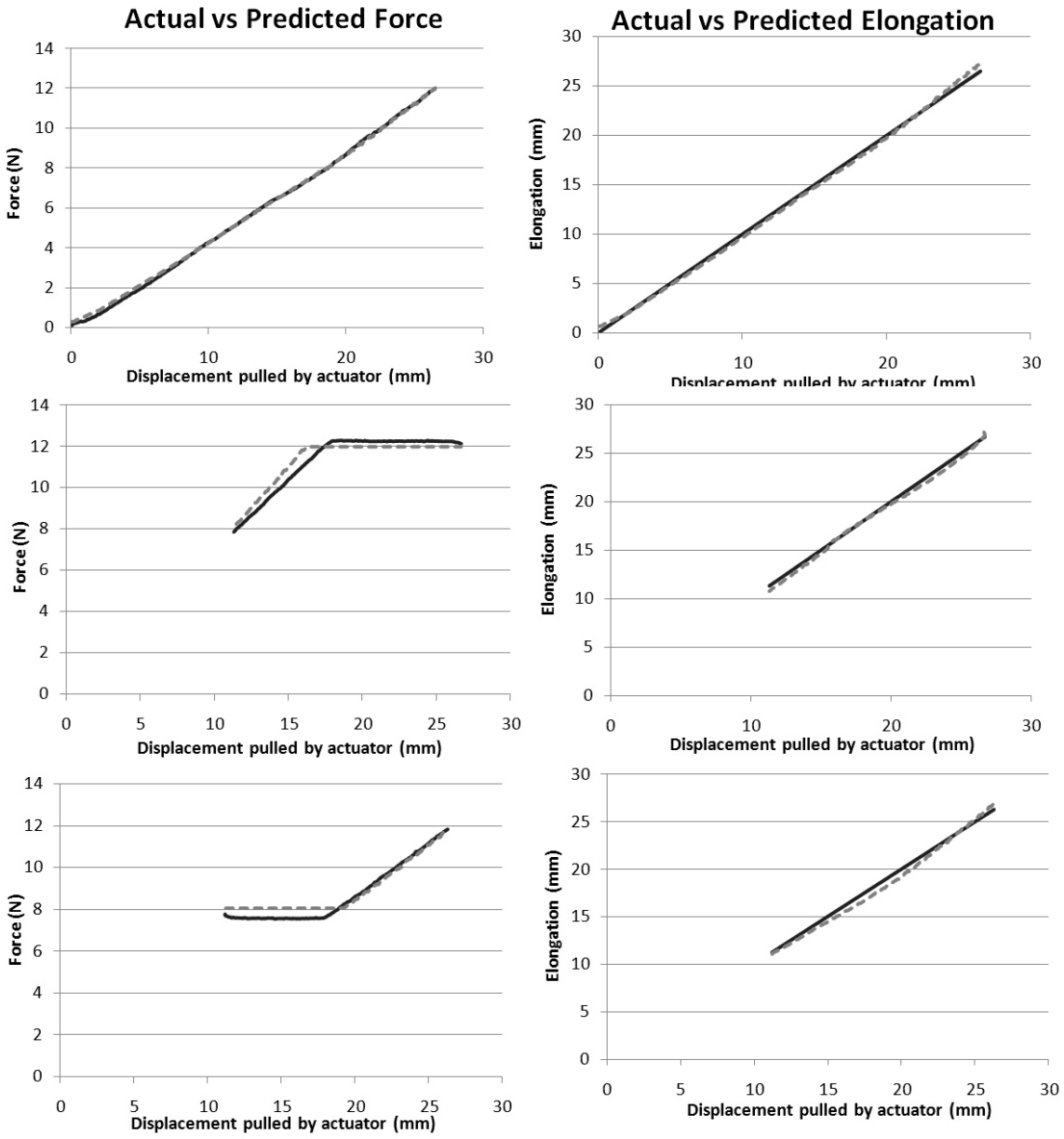

Figure 27