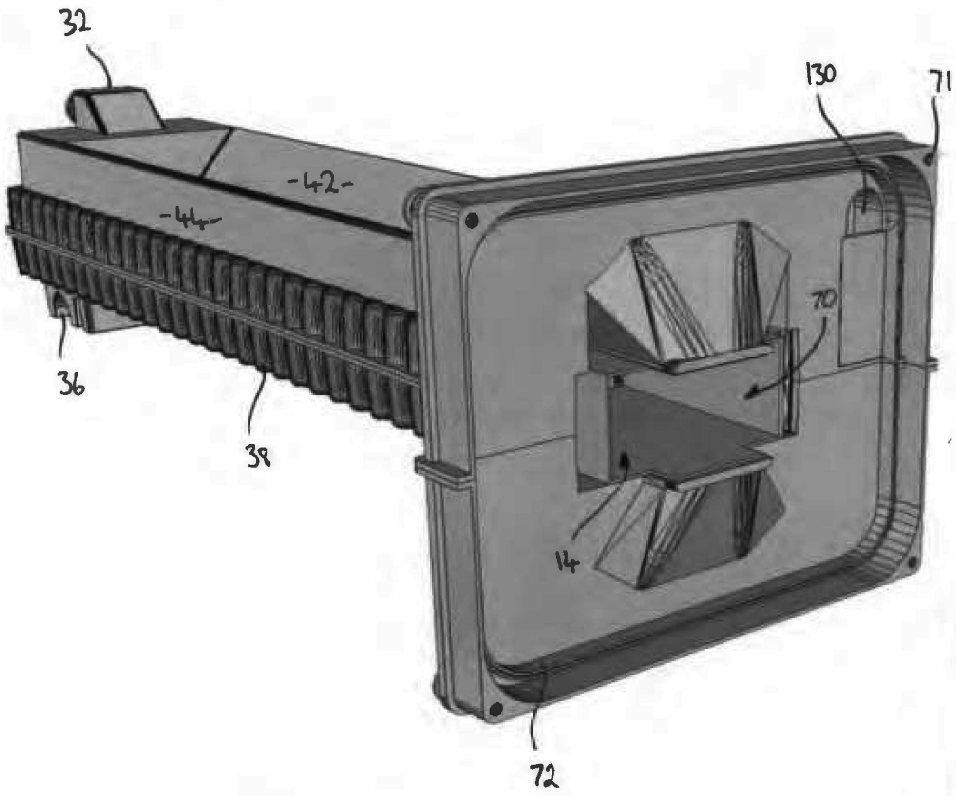

10

FIGURE 1

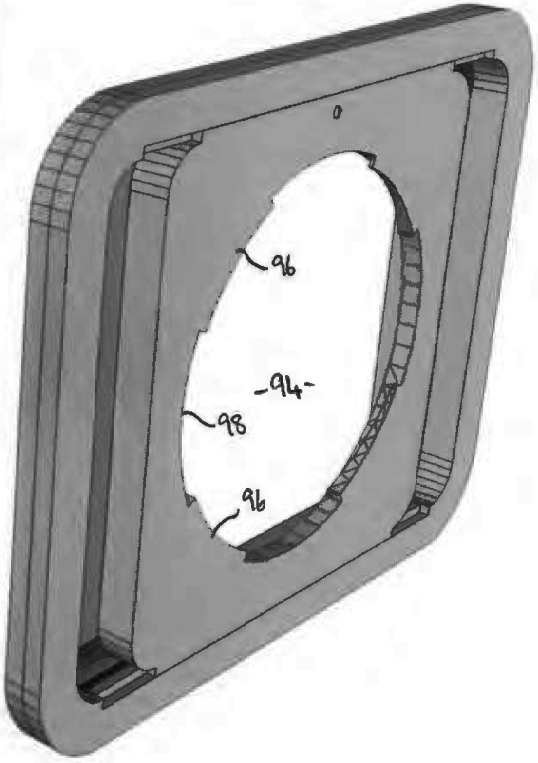

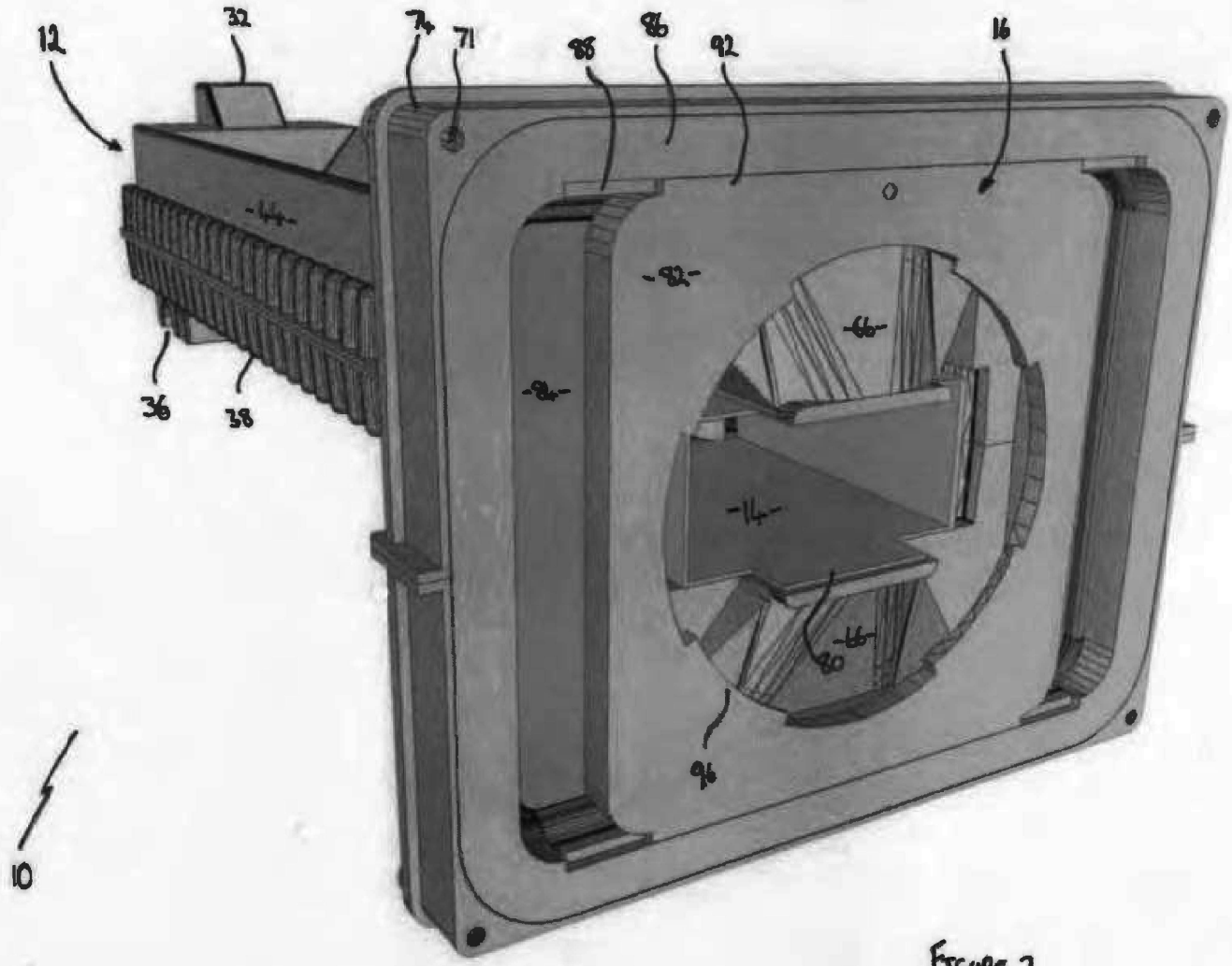

FIGURE 2

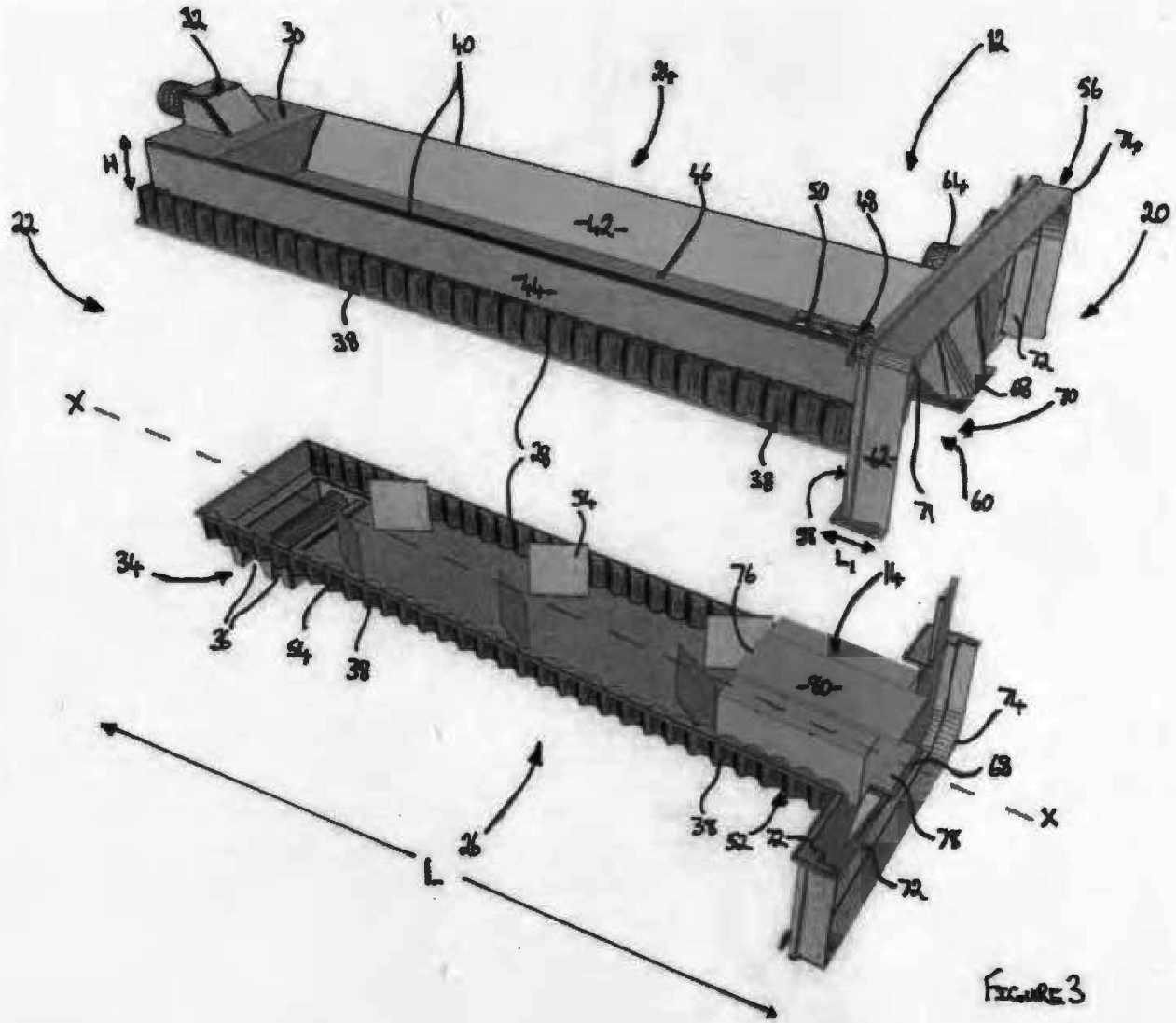
32
30
40
24
12
56
74
H
22
46
50
48
64
20
-42-
-44-
38
72
68
70
X
28
38
-42-
71
60
58
L1
54
34
76
14
36
54
38
-80-
74
68
X
38
52
72
78
26
72
L

FIGURE 3

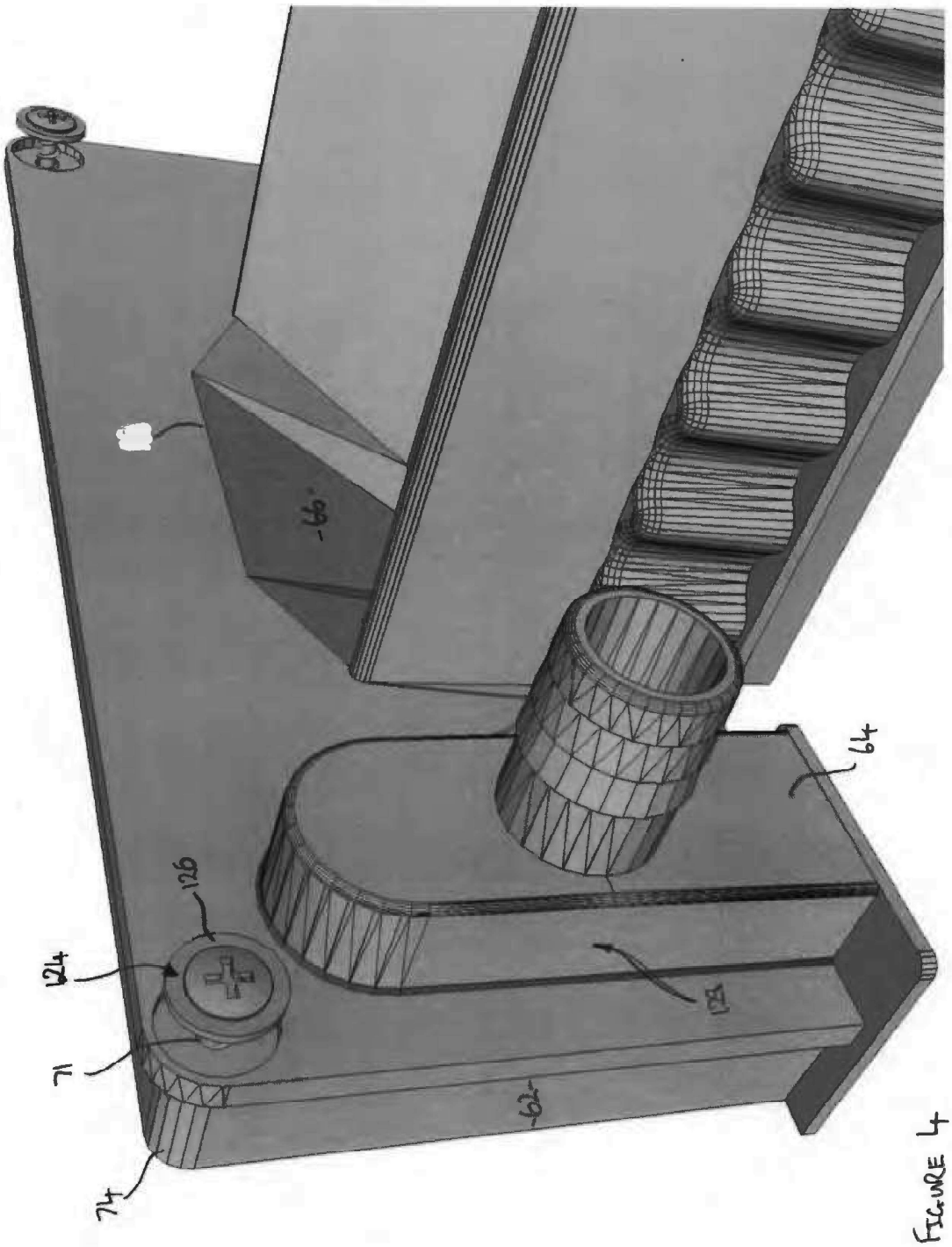

FIGURE 4

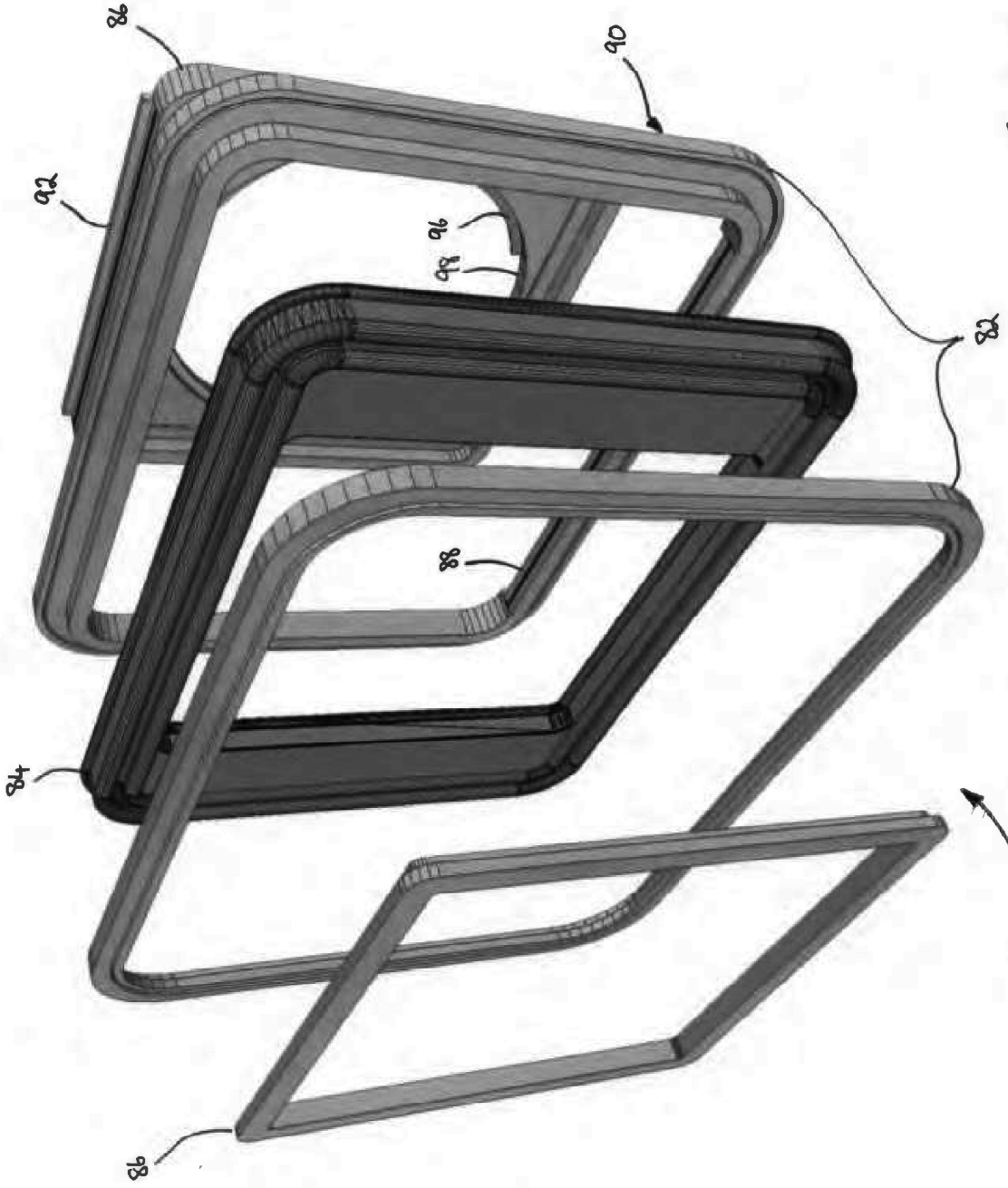

FIGURE 5

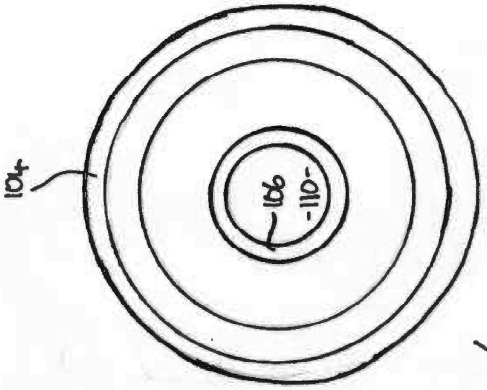

FIGURE 6b

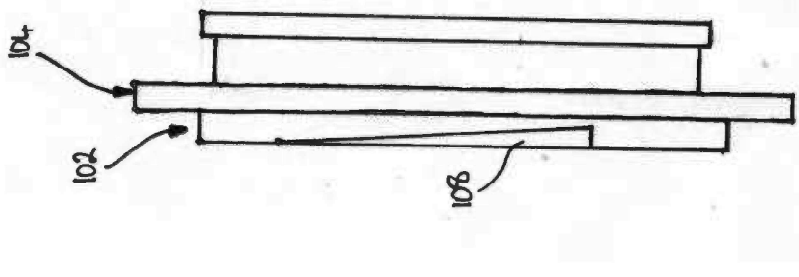

FIGURE 6a

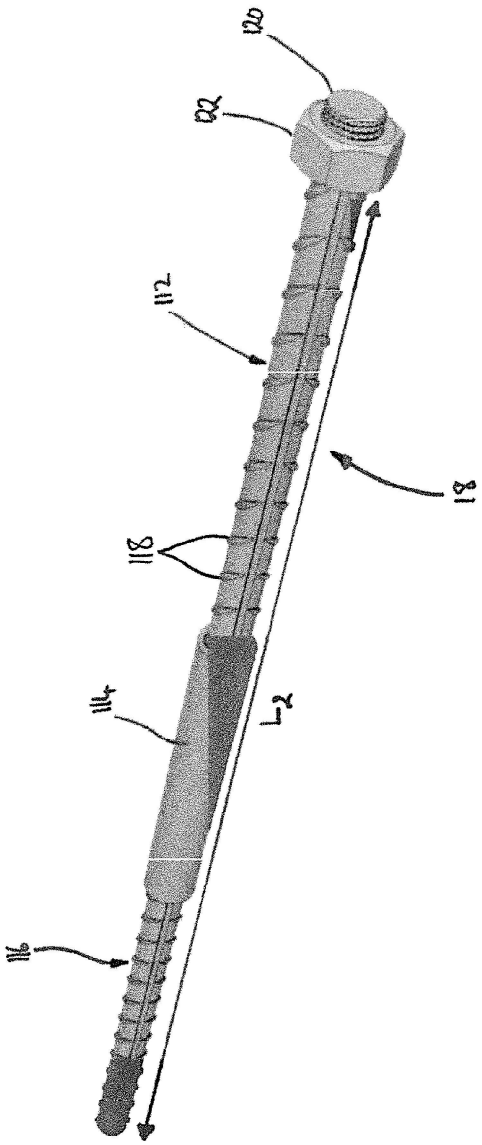

FIGURE 7

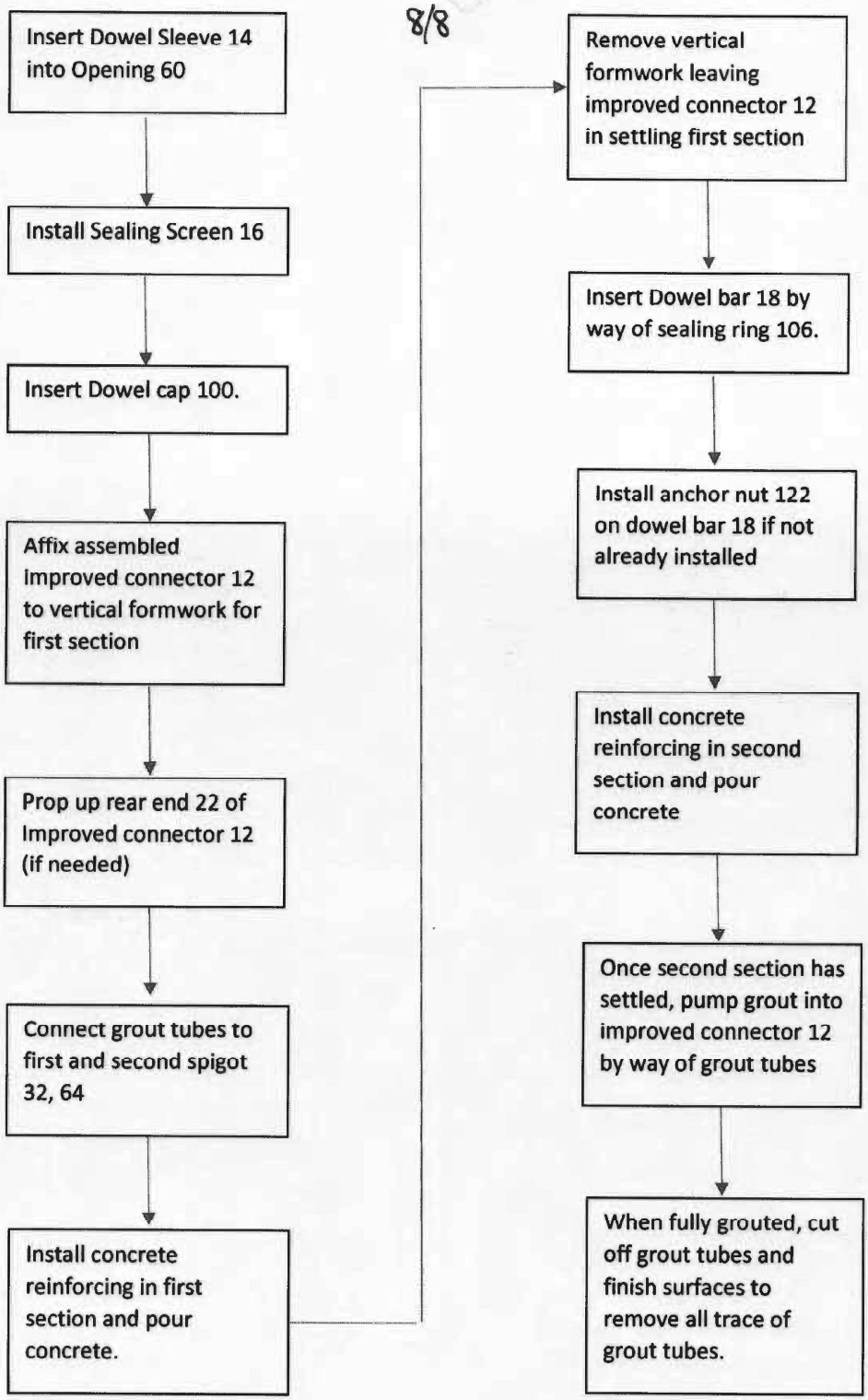
Insert Dowel Sleeve 14 into Opening 60
Install Sealing Screen 16
Insert Dowel cap 100.
Affix assembled Improved connector 12 to vertical formwork for first section
Prop up rear end 22 of Improved connector 12 (if needed)
Connect grout tubes to first and second spigot 32, 64
Install concrete reinforcing in first section and pour concrete.
Remove vertical formwork leaving improved connector 12 in settling first section
Insert Dowel bar 18 by way of sealing ring 106.
Install anchor nut 122 on dowel bar 18 if not already installed
Install concrete reinforcing in second section and pour concrete
Once second section has settled, pump grout into improved connector 12 by way of grout tubes
When fully grouted, cut off grout tubes and finish surfaces to remove all trace of grout tubes.

FIGURE 8