FIG.1

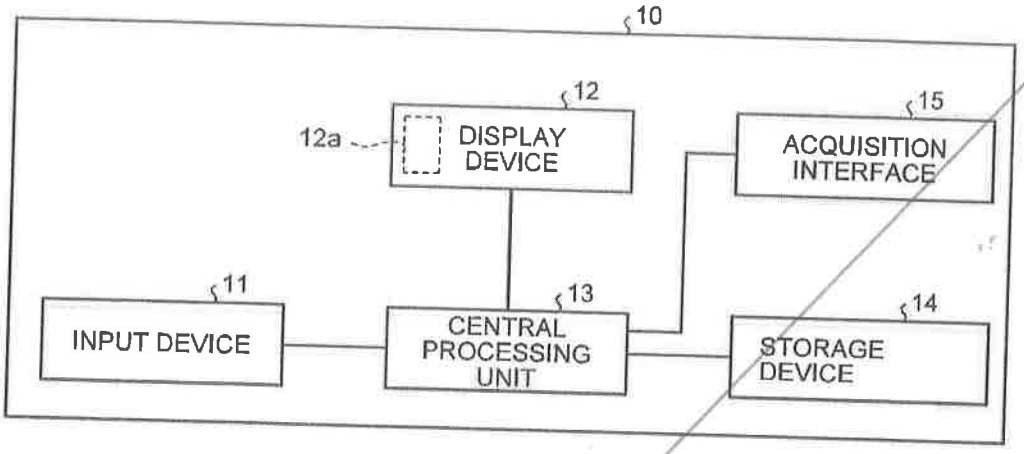
10
12
12a
DISPLAY DEVICE
15
ACQUISITION INTERFACE
11
INPUT DEVICE
13
CENTRAL PROCESSING UNIT
14
STORAGE DEVICE

FIG.2

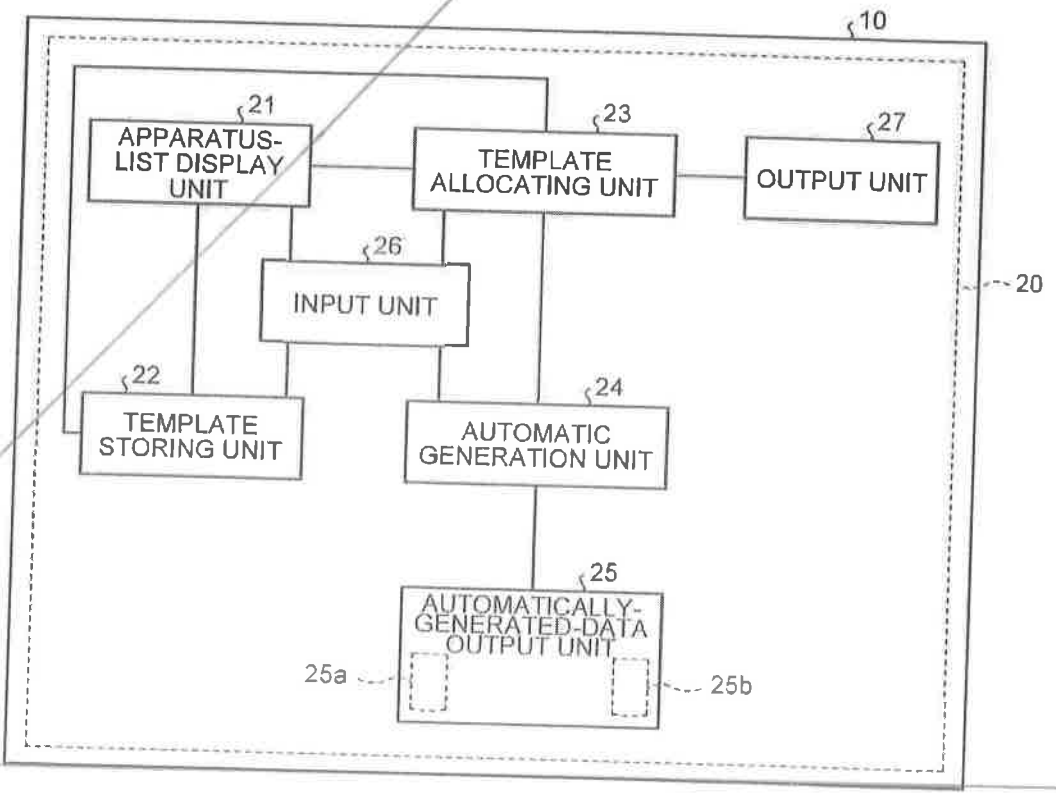
10
21
APPARATUS-LIST DISPLAY UNIT
23
TEMPLATE ALLOCATING UNIT
27
OUTPUT UNIT
26
INPUT UNIT
20
22
TEMPLATE STORING UNIT
24
AUTOMATIC GENERATION UNIT
25
AUTOMATICALLY-GENERATED-DATA OUTPUT UNIT
25a
25b

FIG.3

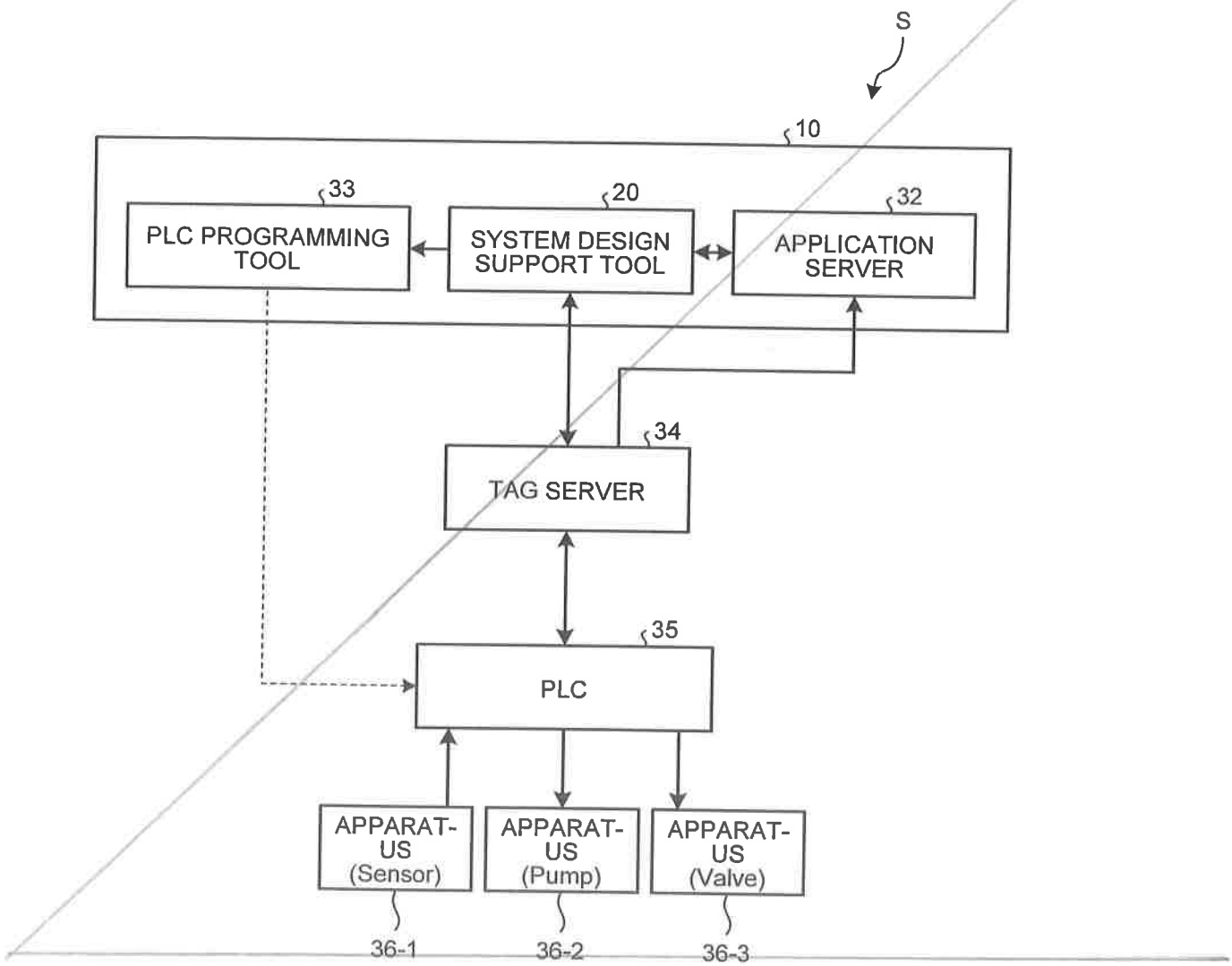
S
10
33
PLC PROGRAMMING TOOL
20
SYSTEM DESIGN SUPPORT TOOL
32
APPLICATION SERVER
34
TAG SERVER
35
PLC
APPARAT-US (Sensor)
APPARAT-US (Pump)
APPARAT-US (Valve)
36-1
36-2
36-3

FIG.1

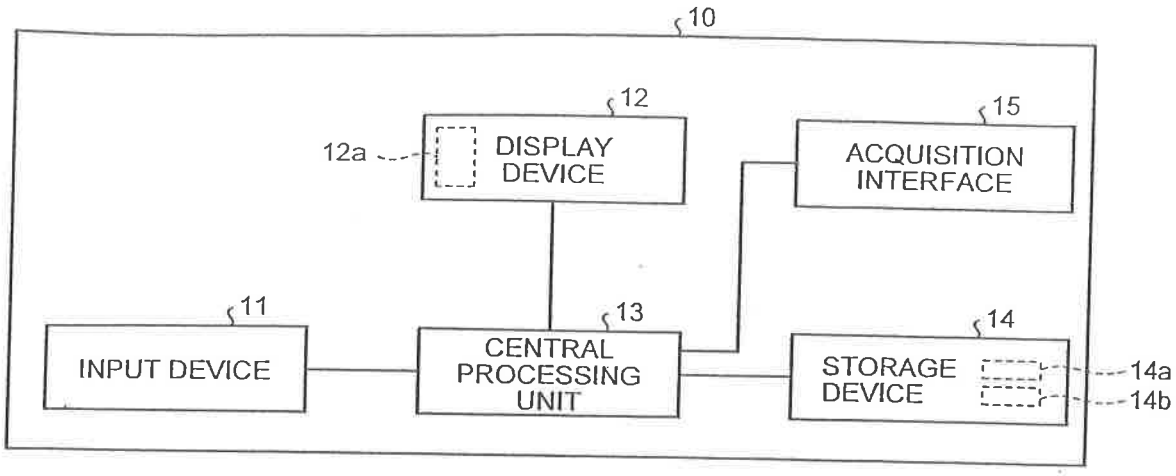
10
12
12a
DISPLAY DEVICE
15
ACQUISITION INTERFACE
11
INPUT DEVICE
13
CENTRAL PROCESSING UNIT
14
STORAGE DEVICE
14a
14b

FIG.2

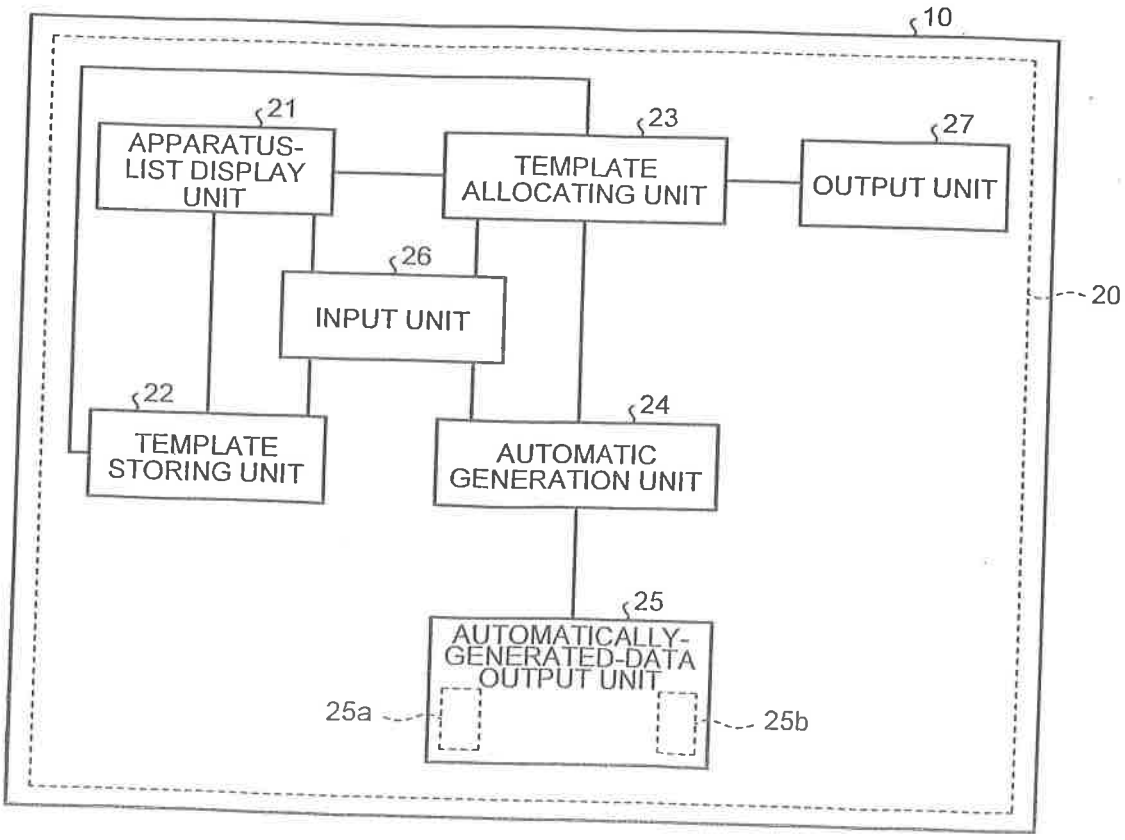
10
21
APPARATUS-LIST DISPLAY UNIT
23
TEMPLATE ALLOCATING UNIT
27
OUTPUT UNIT
26
INPUT UNIT
20
22
TEMPLATE STORING UNIT
24
AUTOMATIC GENERATION UNIT
25
AUTOMATICALLY-GENERATED-DATA OUTPUT UNIT
25a
25b

FIG.3

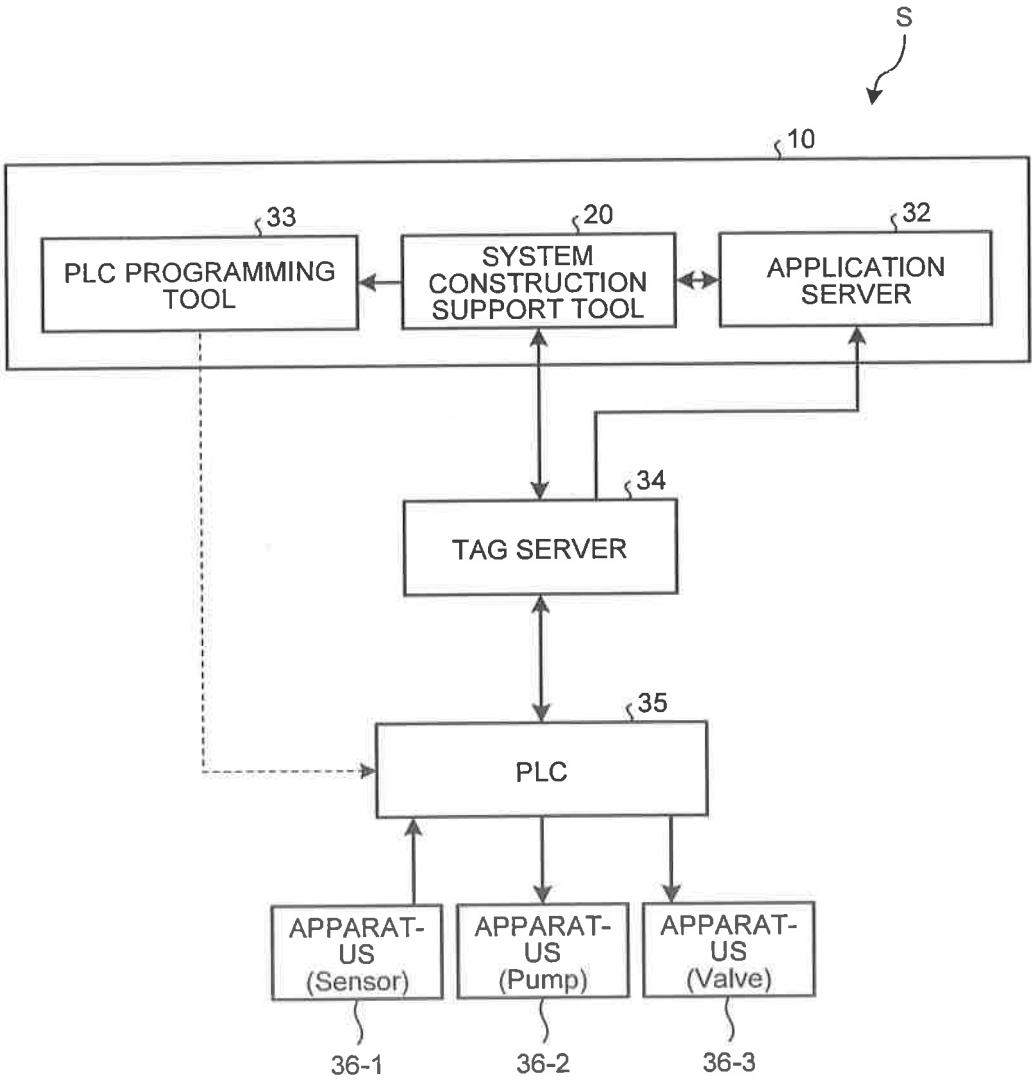
S
10
33
PLC PROGRAMMING TOOL
20
SYSTEM CONSTRUCTION SUPPORT TOOL
32
APPLICATION SERVER
34
TAG SERVER
35
PLC
APPARAT-US (Sensor)
APPARAT-US (Pump)
APPARAT-US (Valve)
36-1
36-2
36-3