Acknowledgement

1	**Item Description**	Request to Amend Application Before Grant
	eFile Ref. No.	E201701130111T
	Applicant Name	NOVOMATIC AG
	Application Number	11201610512T
	Message	Form is submitted successfully.

SINGAPORE PATENTS ACT (CHAPTER 221)
PATENTS RULES

PATENTS FORM 13 *2013*	Request to Amend Application Before Grant

Pre-requisites:

a. This form should be filed only if you are amending an application for a patent before grant. If you wish to amend the specification of a patent that has been granted, please file Patents Form 17 instead.

b. If you are making an amendment of the description, claims, drawings or abstract, this form is to be accompanied by a copy of the amended sheet(s), with the proposed amendment clearly indicated in the following manner:

- Any text, figure or other matter that are to be replaced or deleted to be struck through; and

- Any replacement text, figure or other matter to be underlined.

c. If you are filing a response to written opinion, and intend to make written submissions and amend the specification of the application, they have to be filed at the same time.

d. If you are making a request under the ASEAN Patent Examination Co-operation (ASPEC) programme, please refer to the ASPEC Notice and Procedures available on IPOS's website at http://www.ipos.gov.sg for the documents that need to be filed together with this form

Estimated Time:

This form may take approximately 8 - 12 minutes to complete.

General:

*a. * denotes mandatory field.*

b. Please note that any fee paid is not refundable.

PART 1 Reference

Applicant/ Agent Reference	CW/RK/20163161
IPOS Reference *(if applicable)*	2017/27441371977V

PART 2 Application No.*

Application No.*	11201610512T

PART 3 Name of Applicant*

Note: If there is insufficient space, please use the continuation sheet CS 4.

Applicants	1	**Type of Applicant**	Corporate
		UEN/ Company Code	E00344134P
		Name	NOVOMATIC AG
		Address Type	Foreign
		Address	Wiener Strasse 158 A-2352 Gumpoldskirchen
		Is SME	
		Country of Incorporation	Austria
		Sole Proprietor or Partners' Names	

PART 4 Reason for Making the Amendment*

Reason for Making the Amendment* *(Note:Cross only one checkbox)*	☒	In response to the Registrar's formalities examination adverse report
	☐	In response to the Registrar's notification under section 30(6) of the Patent Act and in force immediately before 14 February 2014 or objections to Section 13 (2)/(3) of the Patent Act

	☐ Voluntary amendment ☐ In response to a written opinion issued for an application with a date of filing before 1 July 2004 ☐ Related to Rule 47 (6) with the date of filing on or after 14 February 2014

PART 5 Amendments to be Made*

Summary Explanation of the Amendments Sought	To delete the page numbers at the bottom page of the drawings.	
Amendment to PF1	☐	
Amendment to Description with Claims	0	sheet(s)
Amendment to Description without Claims	0	sheet(s)
Amendment to Claims only	0	sheet(s)
Amendment to Drawings	3	sheet(s)
Amendment to Abstract	0	sheet(s)
Remarks		

PART 6 Contact Details*

Note:
a. The email address and telephone number provided are for contact purposes in case of query.
b. The official correspondence will be sent to the address for service in Singapore as indicated in this box, and must be the same as the one on our record.
c. Please lodge CM1 if you are a different agent or have changed your address for service in Singapore.

Agent UEN/Company Code	200911430C
Agent Name	QUAHE WOO & PALMER LLC

Representative or C/O Name	
	Address for Service in Singapore Block/ House No. 180 Street Name CLEMENCEAU AVENUE Level - Unit 02-02 Building Name HAW PAR CENTRE Postal Code 239922
Contact Person Direct Telephone No. Email Address	 66220359
PART 7 Declaration*	
Declaration	**By Person Filing the Form** I do hereby declare that the information furnished above is true to the best of my knowledge. **By Agent** I do hereby declare that : i. I have been duly authorised to act as an agent on behalf of the person(s) filing this form. ii. The information furnished above on behalf of the person(s) filing this form is true to the best of the person(s)' knowledge.
Name Signature Date *(DD/MM/YYYY)*	Quahe Woo & Palmer LLC 13/01/2017
No. of Extra Sheets Attached to this Form	sheet(s)

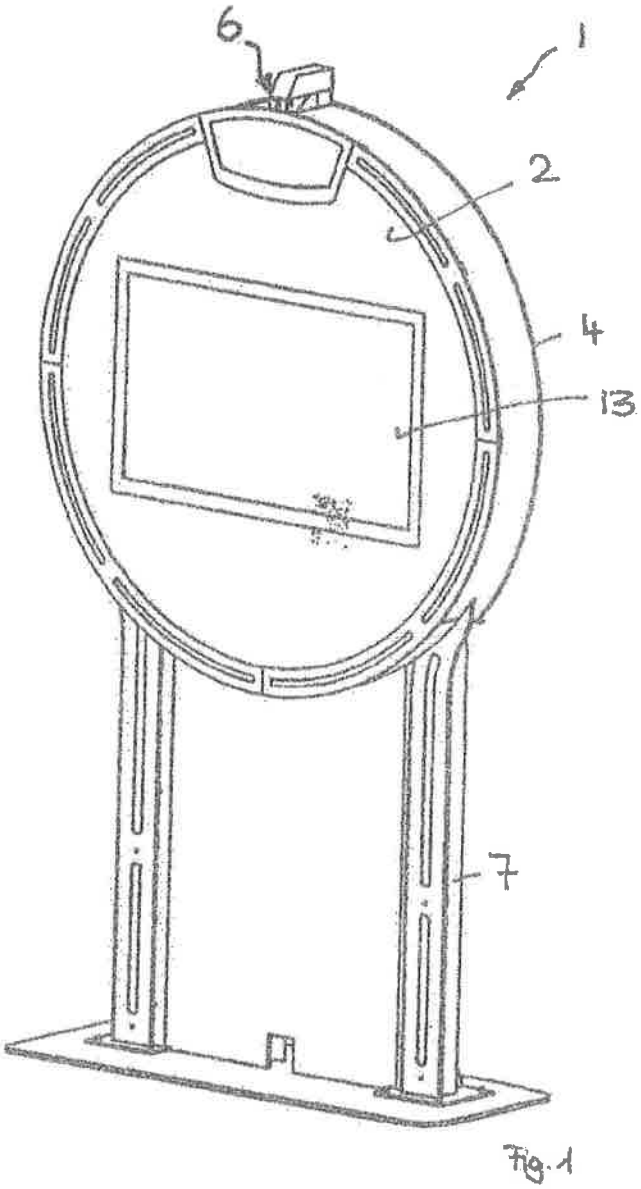

Fig. 1

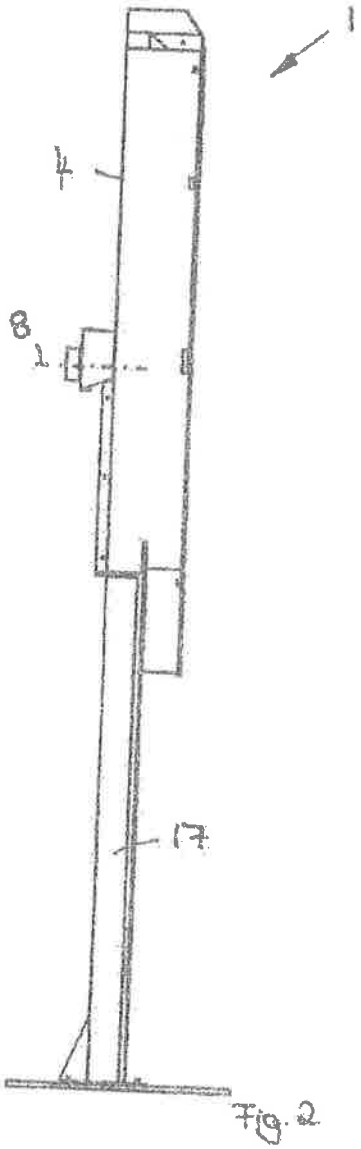

Fig. 2

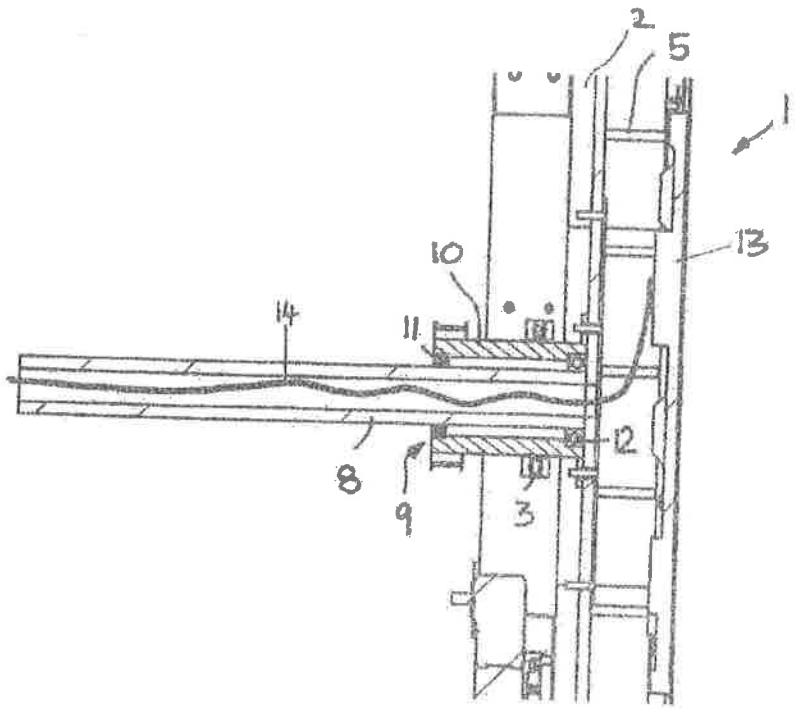

Fig. 3