(12) INTERNATIONAL APPLICATION PUBLISHED UNDER THE PATENT COOPERATION TREATY (PCT)

(19) World Intellectual Property Organization
International Bureau

(43) International Publication Date
10 September 2021 (10.09.2021)

WIPO | PCT

(10) International Publication Number
WO 2021/178464 A1

(51) International Patent Classification:
C23C 16/455 (2006.01) *C23C 16/52* (2006.01)
C23C 16/46 (2006.01)

(21) International Application Number:
PCT/US2021/020560

(22) International Filing Date:
02 March 2021 (02.03.2021)

(25) Filing Language: English

(26) Publication Language: English

(30) Priority Data:
62/984,516 03 March 2020 (03.03.2020) US

(71) Applicant: **INFICON, INC.** [US/US]; Two Technology Place, East Syracuse, NY 13057 (US).

(72) Inventors: **LAPIDOT, Matan**; Kibbutz Kfar, 79875 Menachem (IL). **RINZAN, Mohamed, Buhary**; 104 Fallen Oaks Lane, Manlius, NY 13104 (US). **SONG, Chunhua**; 4598 Providence Road, Jamesville, NY (US).

(81) Designated States *(unless otherwise indicated, for every kind of national protection available)*: AE, AG, AL, AM, AO, AT, AU, AZ, BA, BB, BG, BH, BN, BR, BW, BY, BZ, CA, CH, CL, CN, CO, CR, CU, CZ, DE, DJ, DK, DM, DO, DZ, EC, EE, EG, ES, FI, GB, GD, GE, GH, GM, GT, HN, HR, HU, ID, IL, IN, IR, IS, IT, JO, JP, KE, KG, KH, KN, KP, KR, KW, KZ, LA, LC, LK, LR, LS, LU, LY, MA, MD, ME, MG, MK, MN, MW, MX, MY, MZ, NA, NG, NI, NO, NZ, OM, PA, PE, PG, PH, PL, PT, QA, RO, RS, RU, RW, SA, SC, SD, SE, SG, SK, SL, ST, SV, SY, TH, TJ, TM, TN, TR, TT, TZ, UA, UG, US, UZ, VC, VN, WS, ZA, ZM, ZW.

(84) Designated States *(unless otherwise indicated, for every kind of regional protection available)*: ARIPO (BW, GH, GM, KE, LR, LS, MW, MZ, NA, RW, SD, SL, ST, SZ, TZ, UG, ZM, ZW), Eurasian (AM, AZ, BY, KG, KZ, RU, TJ, TM), European (AL, AT, BE, BG, CH, CY, CZ, DE, DK, EE, ES, FI, FR, GB, GR, HR, HU, IE, IS, IT, LT, LU, LV, MC, MK, MT, NL, NO, PL, PT, RO, RS, SE, SI, SK, SM, TR), OAPI (BF, BJ, CF, CG, CI, CM, GA, GN, GQ, GW, KM, ML, MR, NE, SN, TD, TG).

(54) **Title:** SYSTEM AND METHOD FOR MONITORING SEMICONDUCTOR PROCESSES

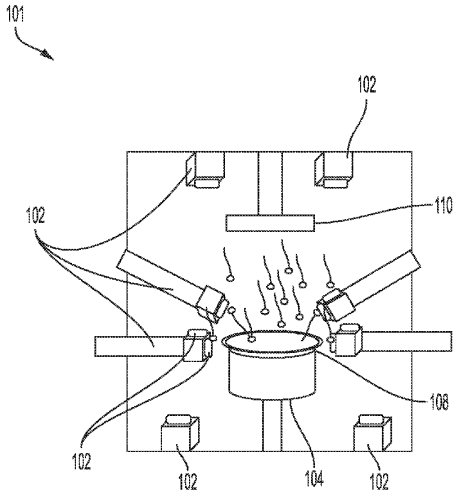

FIG. 1B

(57) **Abstract:** A system and method for monitoring a semiconductor process includes a plurality of sensors and a microcontroller. The plurality of sensors are disposed within a process chamber. The microcontroller receives data from the plurality of sensors and measures the uniformity of a semiconductor process based on the data received from the plurality of sensors.

WO 2021/178464 A1

[Continued on next page]

Published:

— *with international search report (Art. 21(3))*

— *before the expiration of the time limit for amending the claims and to be republished in the event of receipt of amendments (Rule 48.2(h))*