(12) INTERNATIONAL APPLICATION PUBLISHED UNDER THE PATENT COOPERATION TREATY (PCT)

(19) World Intellectual Property Organization
International Bureau

(43) International Publication Date
3 November 2005 (03.11.2005)

PCT

(10) International Publication Number
WO 2005/104095 A1

(51) International Patent Classification[7]: G10L 19/14

(21) International Application Number: PCT/IB2005/001033

(22) International Filing Date: 19 April 2005 (19.04.2005)

(25) Filing Language: English

(26) Publication Language: English

(30) Priority Data:
0408856.3 21 April 2004 (21.04.2004) GB

(71) Applicant *(for all designated States except US)*: **NOKIA CORPORATION** [FI/FI]; Keilalahdentie 4, FIN-02150 Espoo (FI).

(72) Inventor; and

(75) Inventor/Applicant *(for US only)*: **MAKINEN, Jari, M.** [FI/FI]; Tammelan Puistokatu 30-32 C 52, FIN-33100 Tampere (FI).

(74) Agents: **STYLE, Kelda, Camilla, Karen** et al.; Page White & Farrer, 54 Doughty Street, London WC1N 2LS (GB).

(81) Designated States *(unless otherwise indicated, for every kind of national protection available)*: AE, AG, AL, AM, AT, AU, AZ, BA, BB, BG, BR, BW, BY, BZ, CA, CH, CN, CO, CR, CU, CZ, DE, DK, DM, DZ, EC, EE, EG, ES, FI, GB, GD, GE, GH, GM, HR, HU, ID, IL, IN, IS, JP, KE, KG, KM, KP, KR, KZ, LC, LK, LR, LS, LT, LU, LV, MA, MD, MG, MK, MN, MW, MX, MZ, NA, NI, NO, NZ, OM, PG, PH, PL, PT, RO, RU, SC, SD, SE, SG, SK, SL, SM, SY, TJ, TM, TN, TR, TT, TZ, UA, UG, US, UZ, VC, VN, YU, ZA, ZM, ZW.

(84) Designated States *(unless otherwise indicated, for every kind of regional protection available)*: ARIPO (BW, GH, GM, KE, LS, MW, MZ, NA, SD, SL, SZ, TZ, UG, ZM, ZW), Eurasian (AM, AZ, BY, KG, KZ, MD, RU, TJ, TM), European (AT, BE, BG, CH, CY, CZ, DE, DK, EE, ES, FI, FR, GB, GR, HU, IE, IS, IT, LT, LU, MC, NL, PL, PT, RO, SE, SI, SK, TR), OAPI (BF, BJ, CF, CG, CI, CM, GA, GN, GQ, GW, ML, MR, NE, SN, TD, TG).

Published:
— *with international search report*
— *before the expiration of the time limit for amending the claims and to be republished in the event of receipt of amendments*

For two-letter codes and other abbreviations, refer to the "Guidance Notes on Codes and Abbreviations" appearing at the beginning of each regular issue of the PCT Gazette.

(54) Title: SIGNAL ENCODING

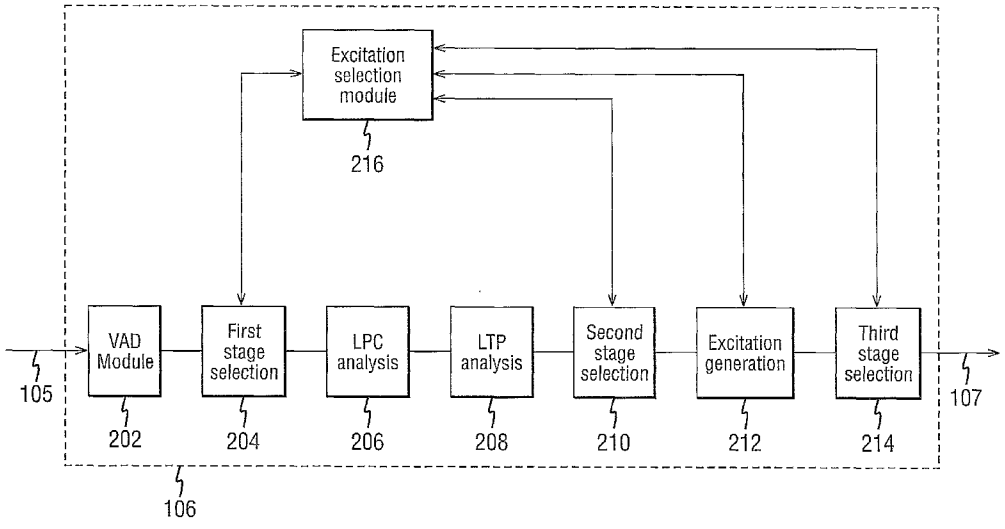

(57) Abstract: A method for encoding a frame in an encoder of a communication system, said method comprising the steps of: calculating a first set of parameters associated with the frame, wherein said first set of parameters comprises filter bank parameters; selecting, in a first stage, one of a plurality of encoding methods based on the first set of parameters one of modes for encoding; calculating a second set of parameters associated with the frame; selecting, in a second stage, one of the plurality of encoding methods based on the result of the first stage selection and the second set of parameters one of modes for encoding; and encoding the frame using the selected encoding excitation method from the second stage.

WO 2005/104095 A1