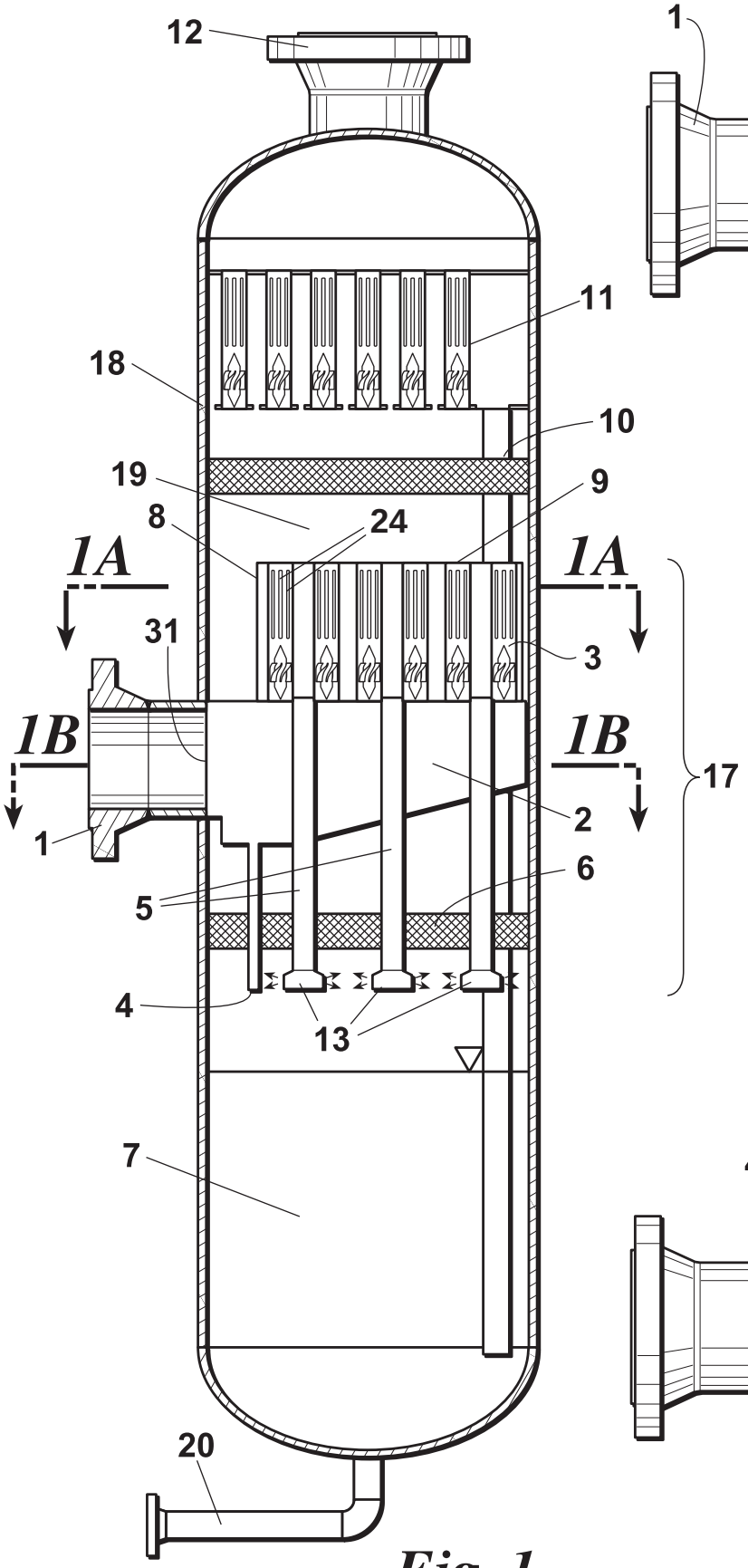

Fig. 1

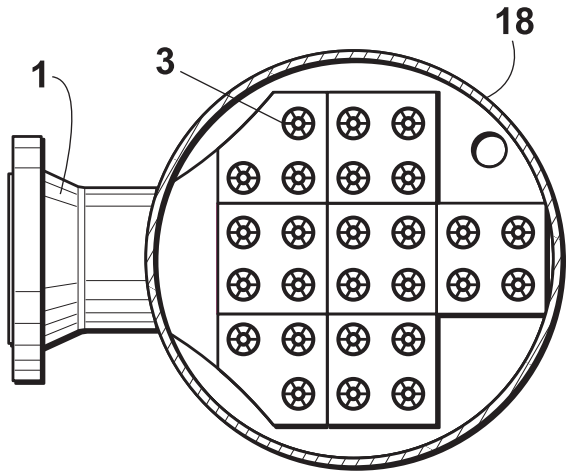

Fig. 1A

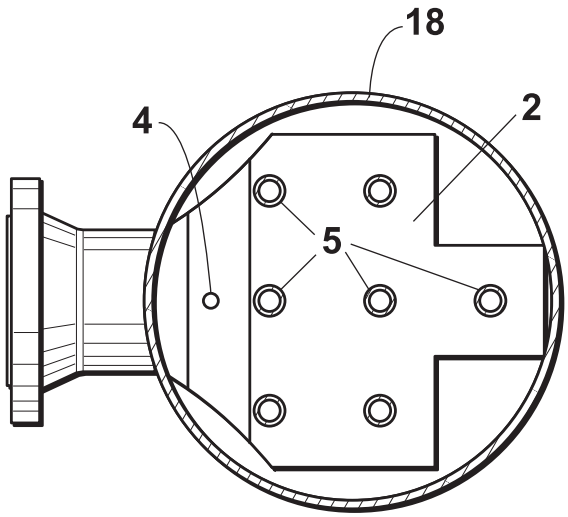

Fig. 1B

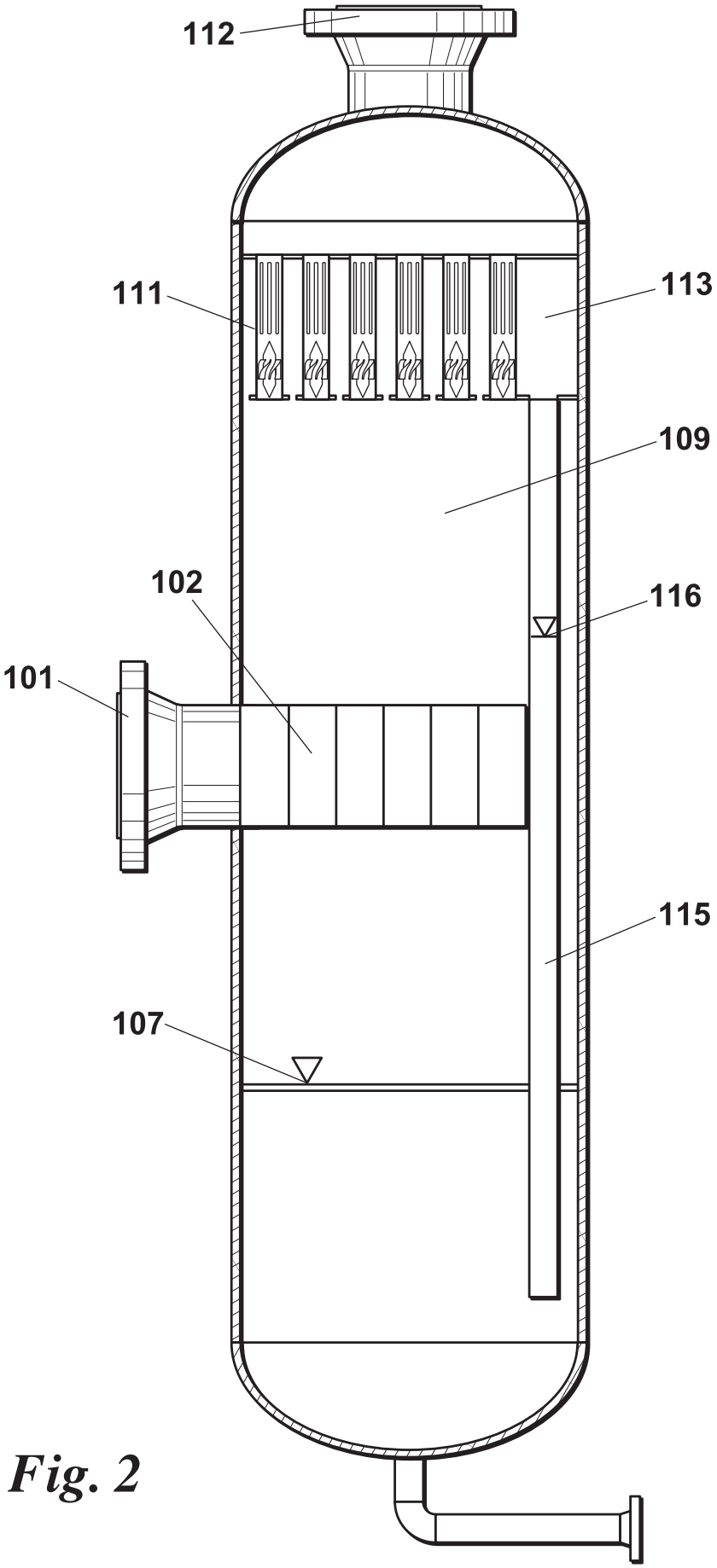

Fig. 2

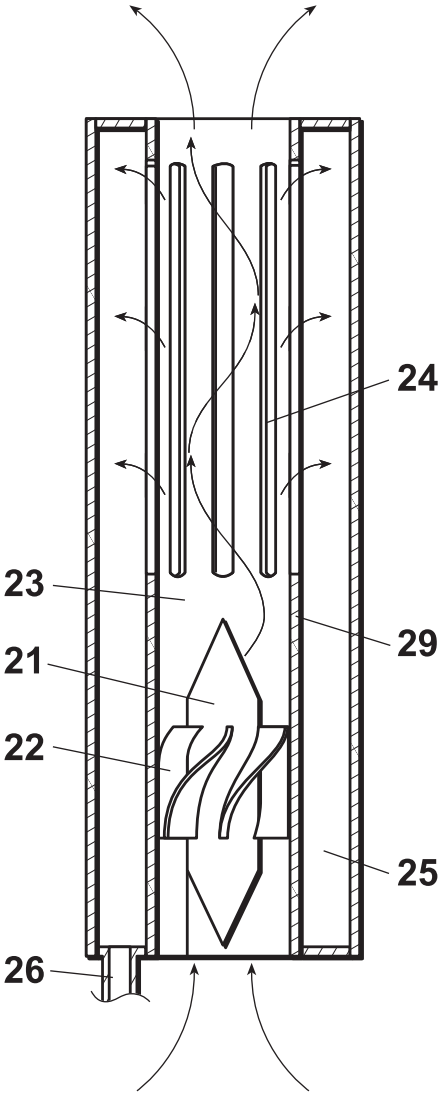

Fig. 3A

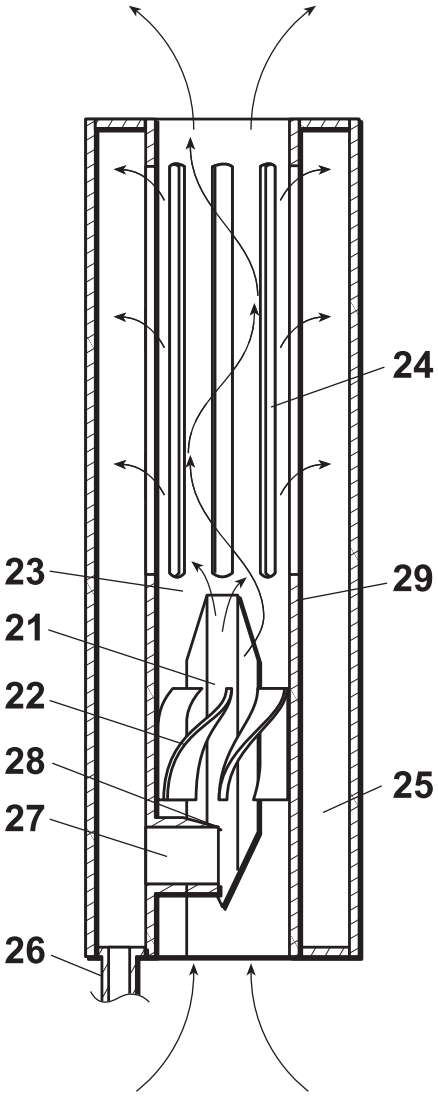

Fig. 3B

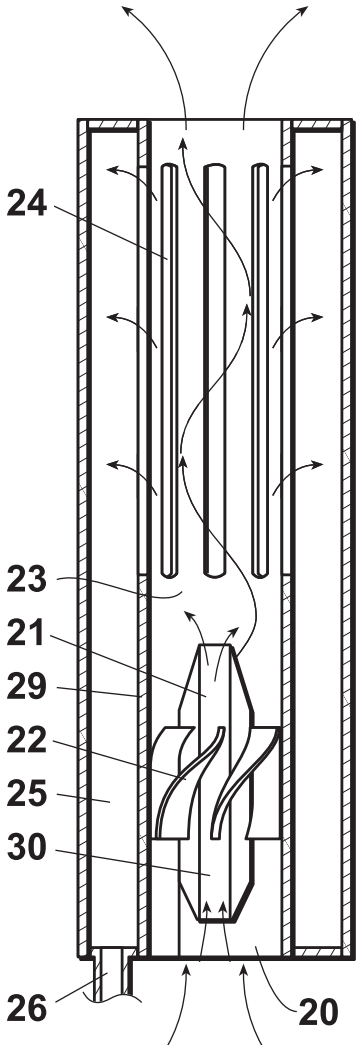

Fig. 3C

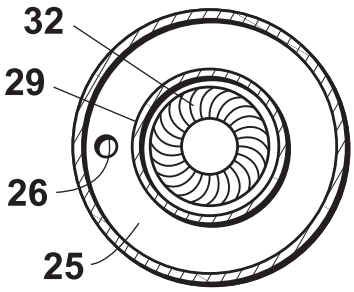

Fig. 3D′

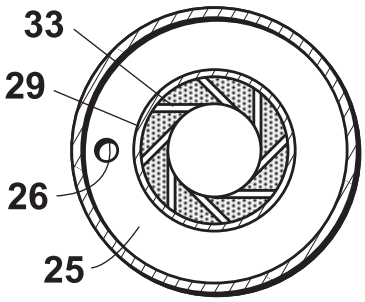

Fig. 3E′

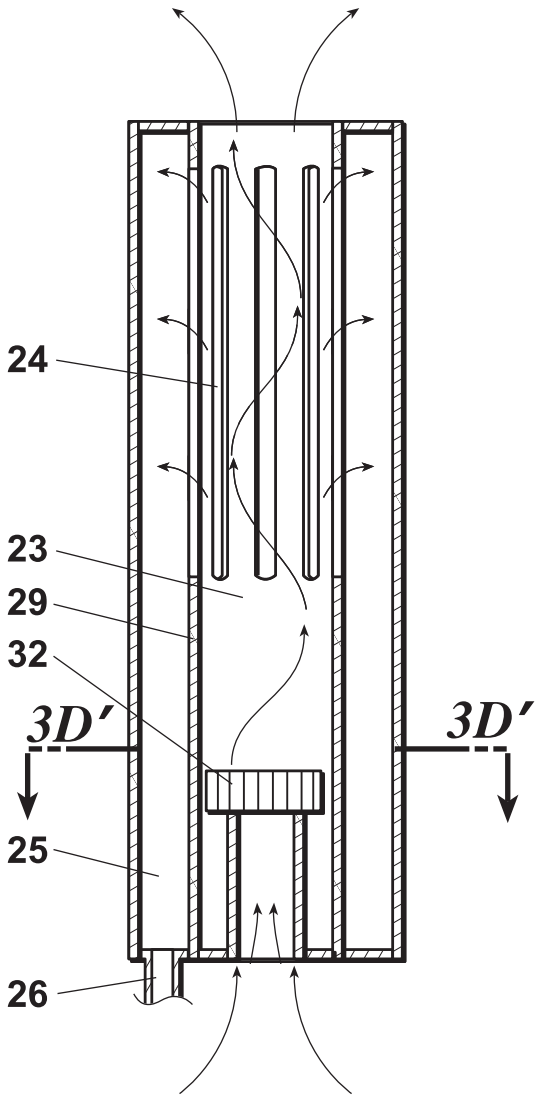

Fig. 3D

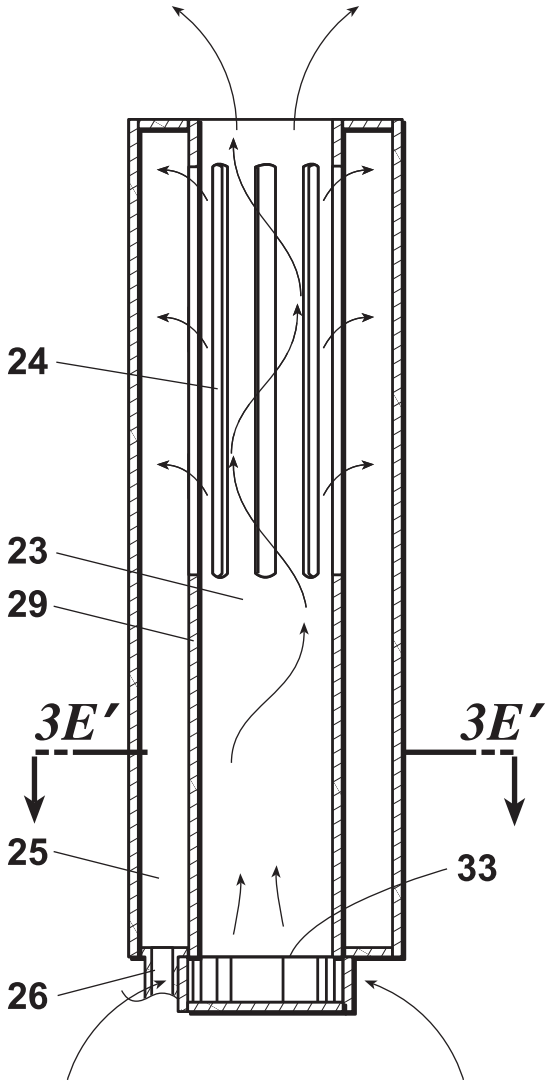

Fig. 3E

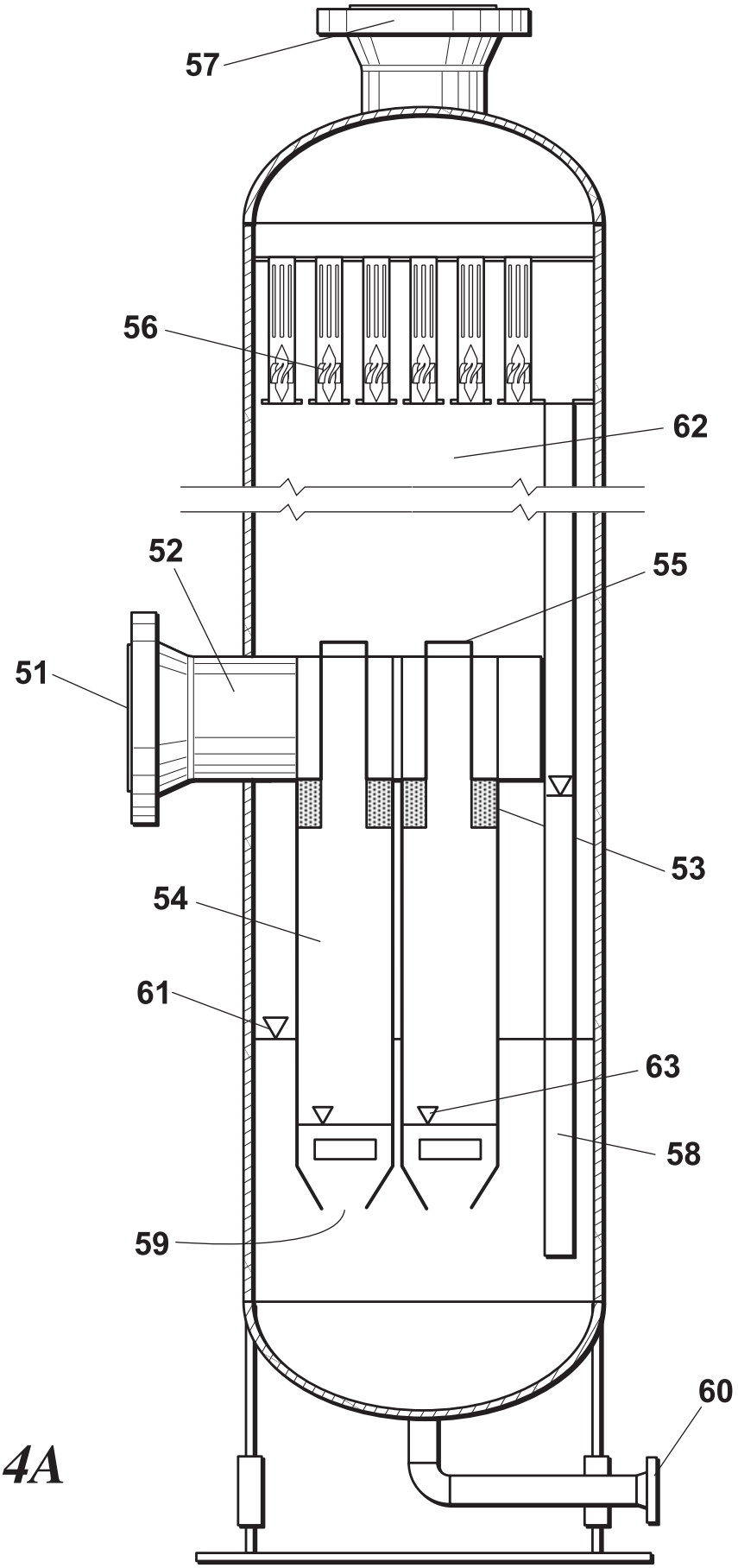

Fig. 4A

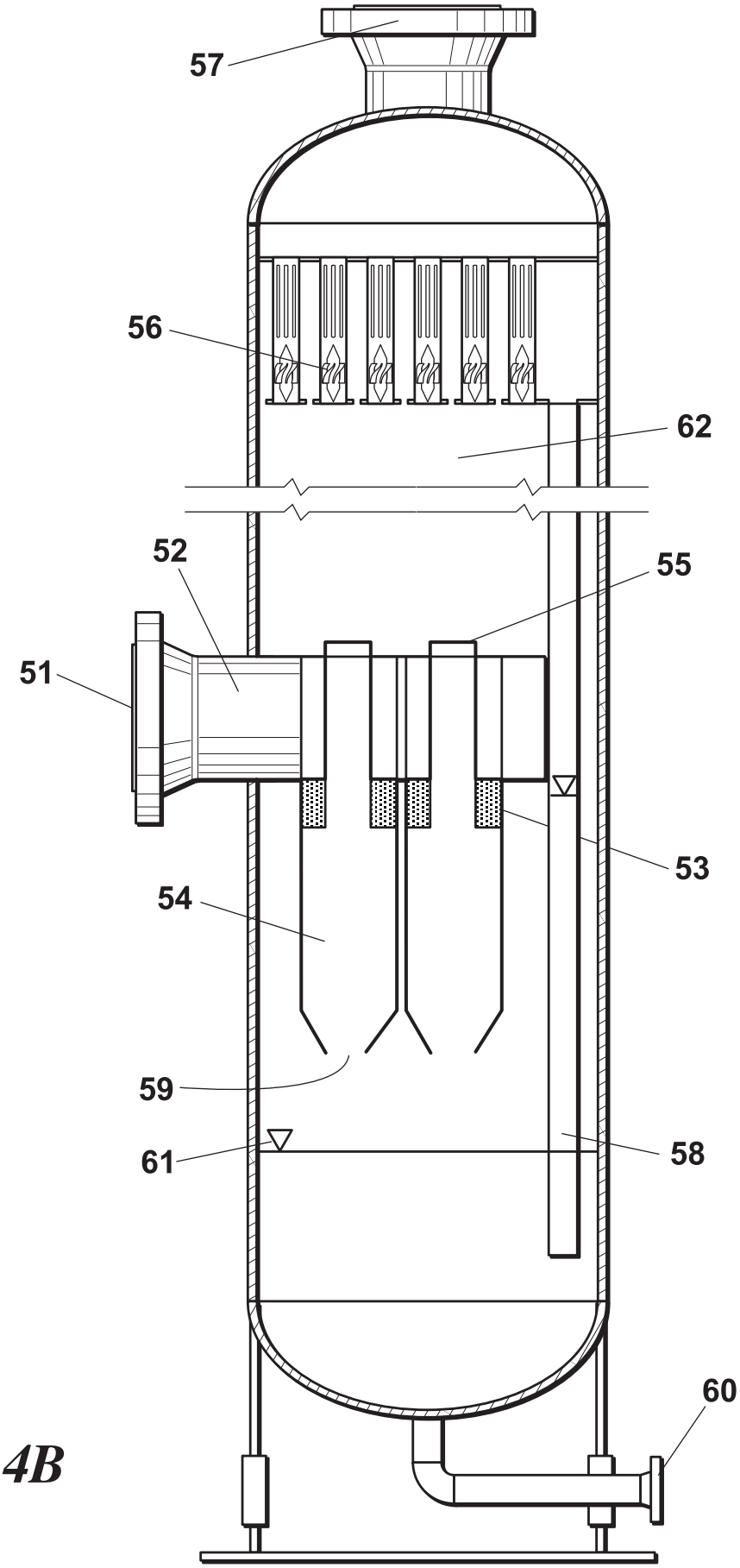

Fig. 4B

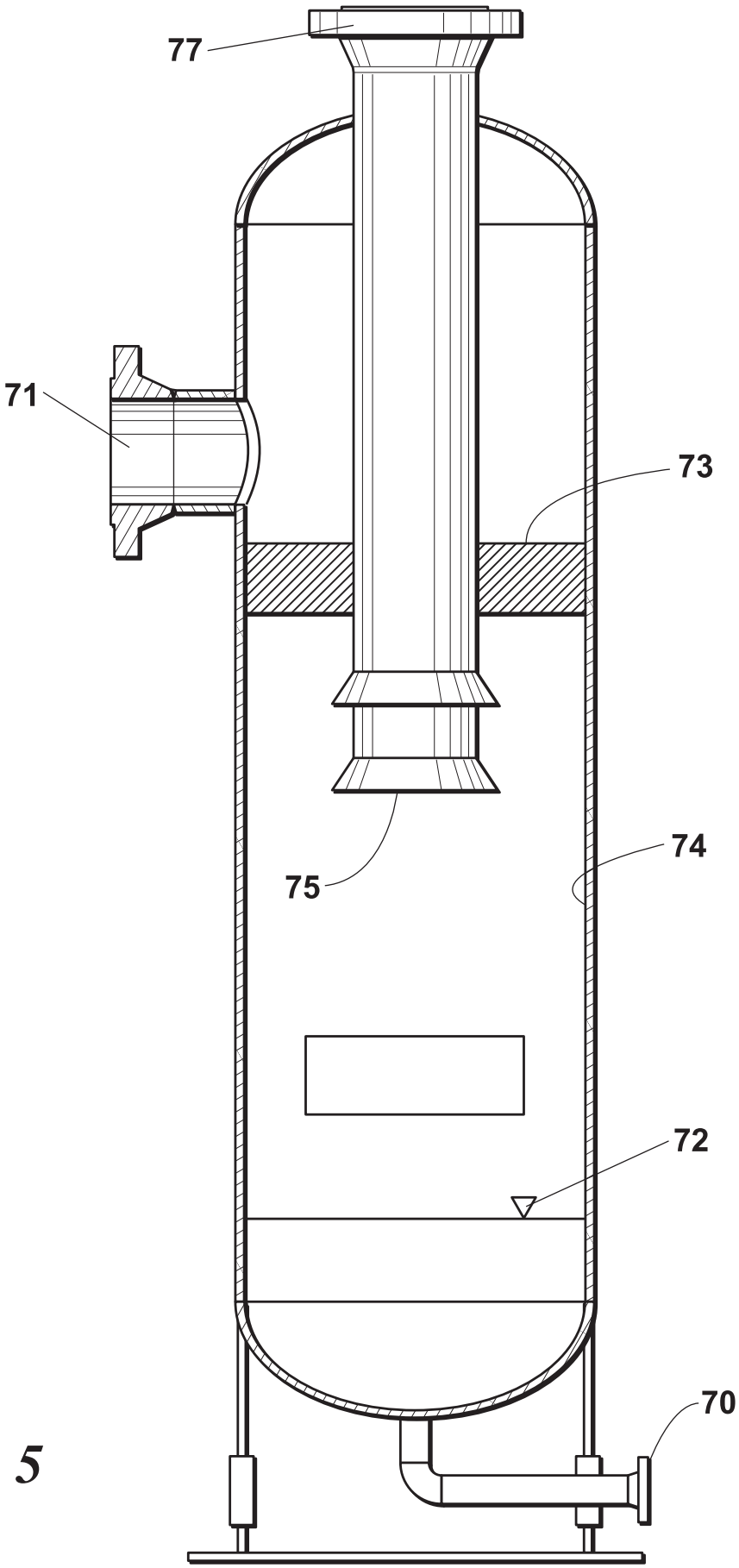

Fig. 5

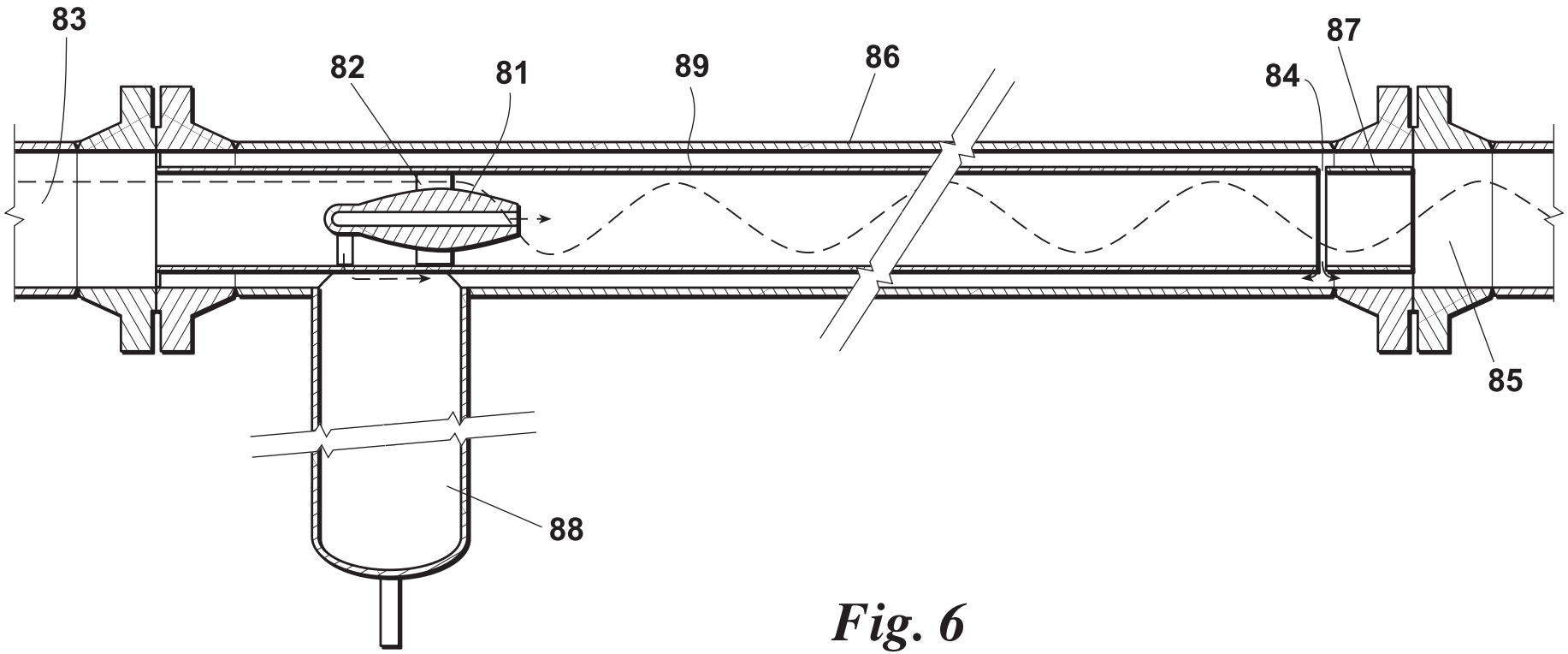

Fig. 6

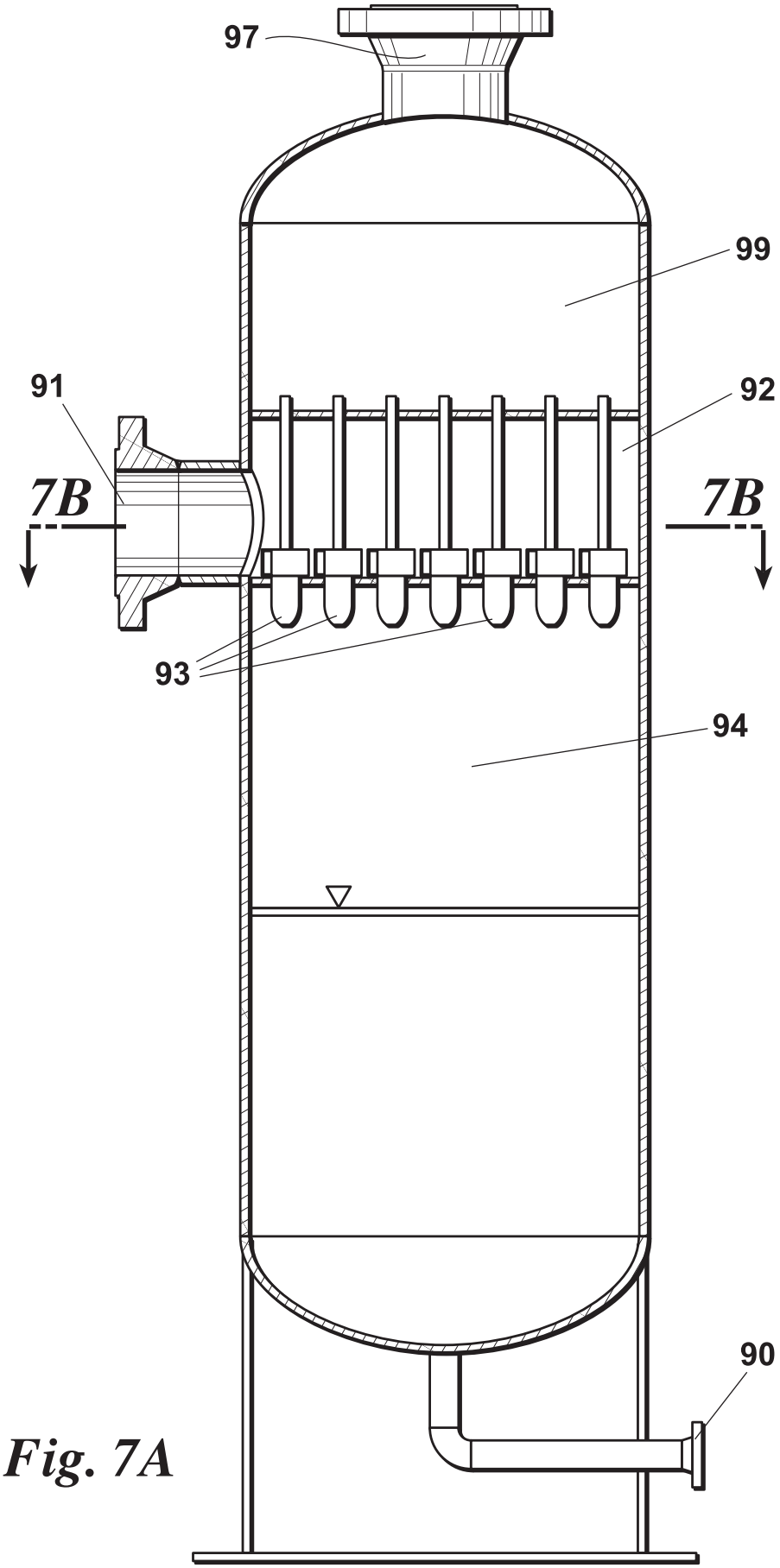

Fig. 7A

Fig. 7B

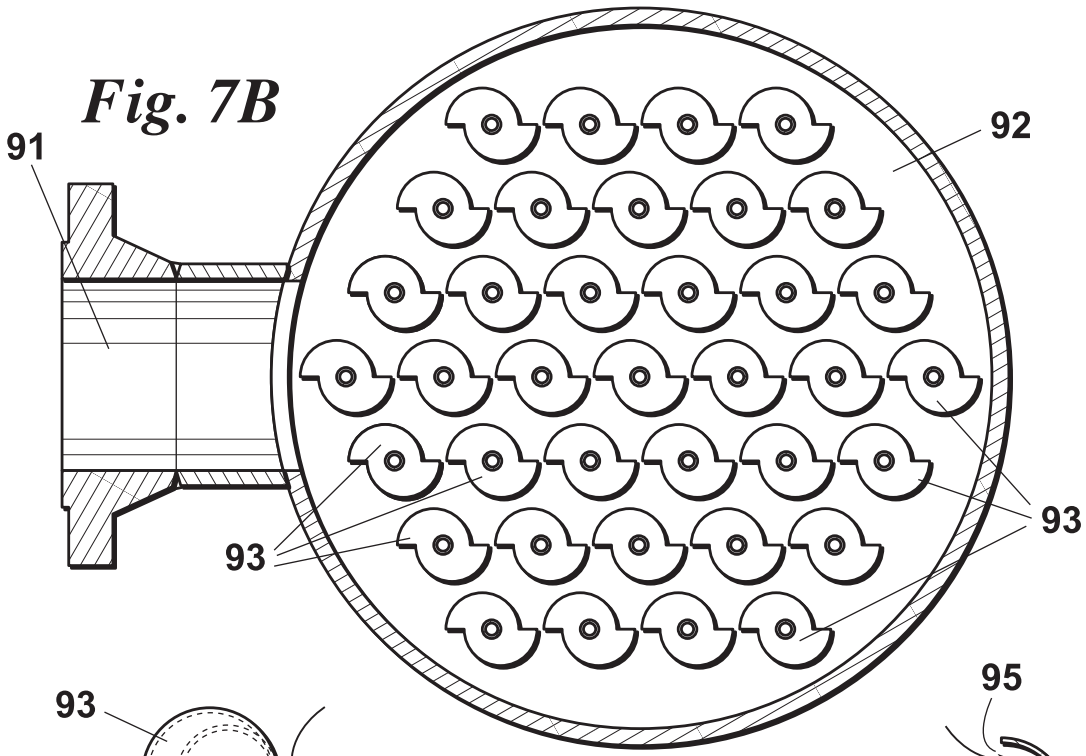

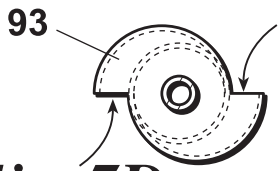

Fig. 7D

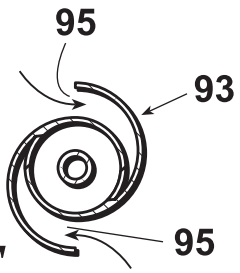

Fig. 7F

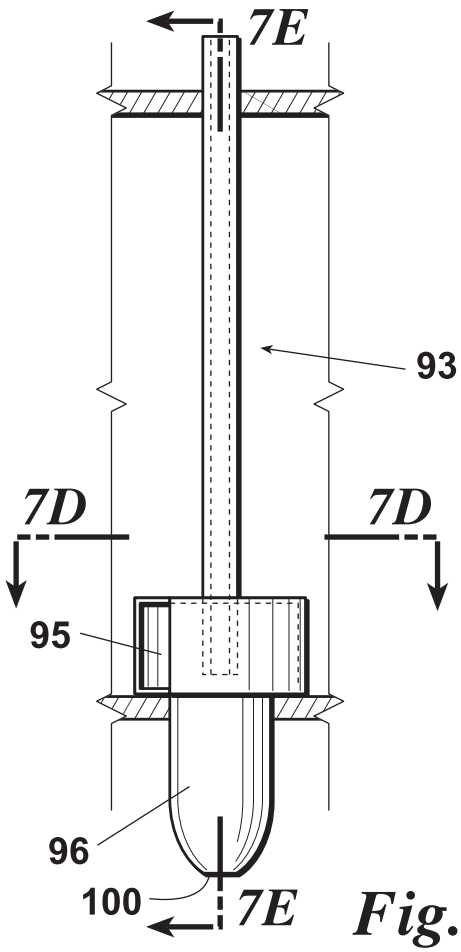

Fig. 7C

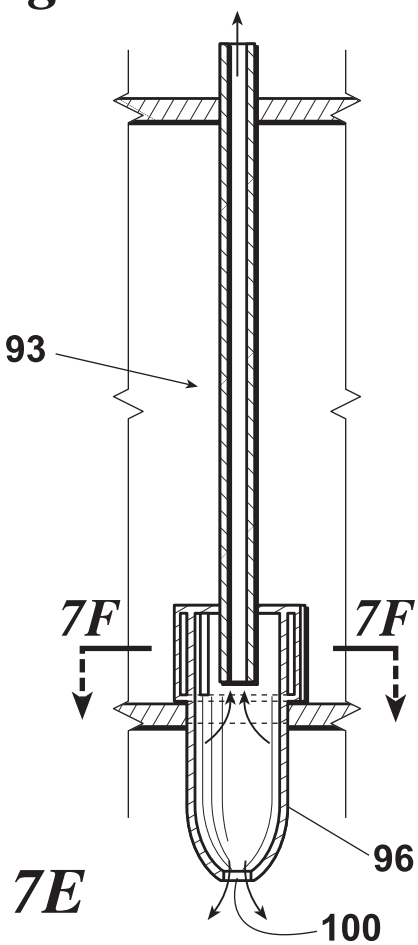

Fig. 7E

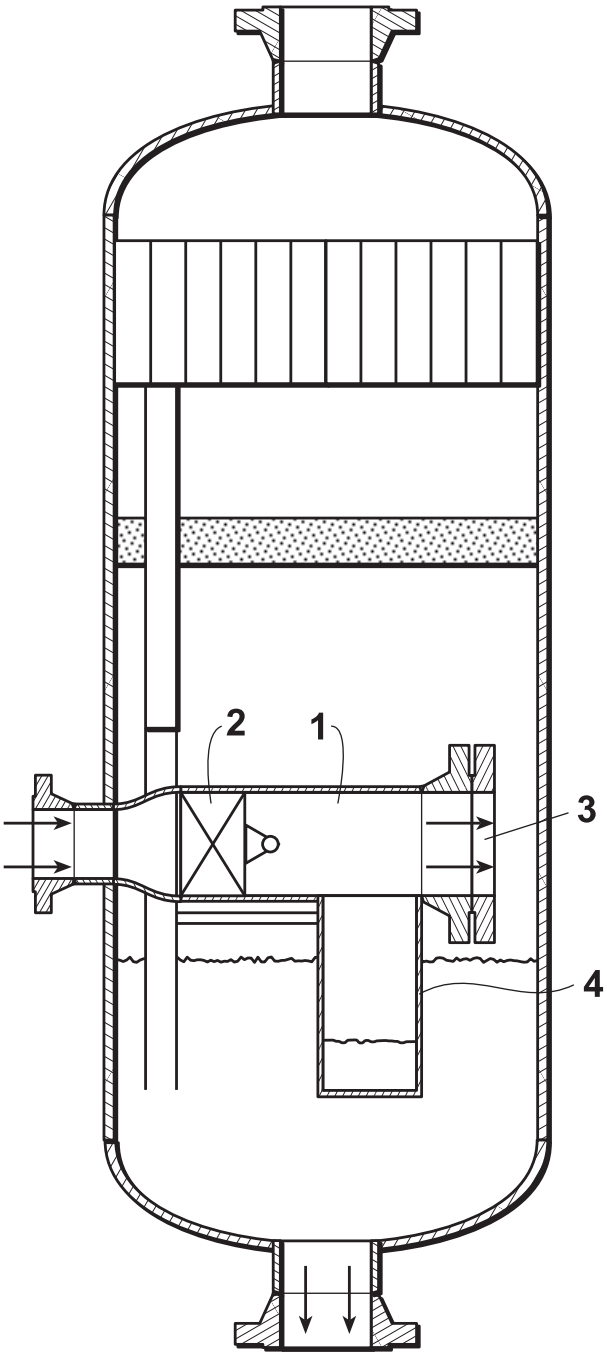

Fig. 8A

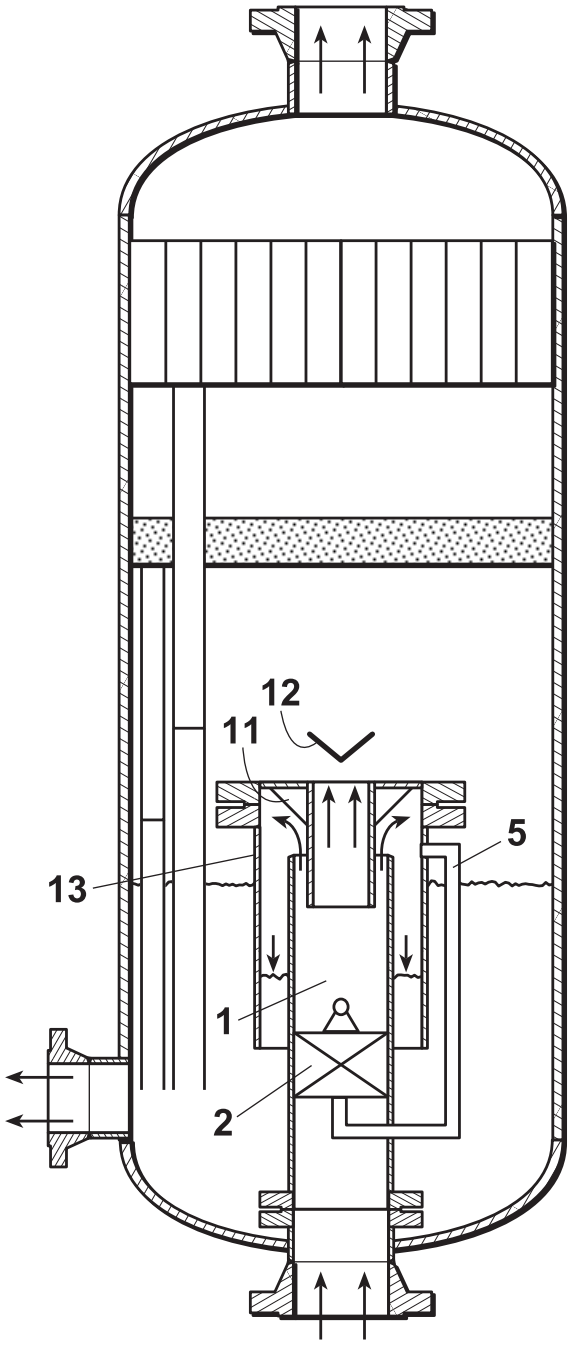

Fig. 8B

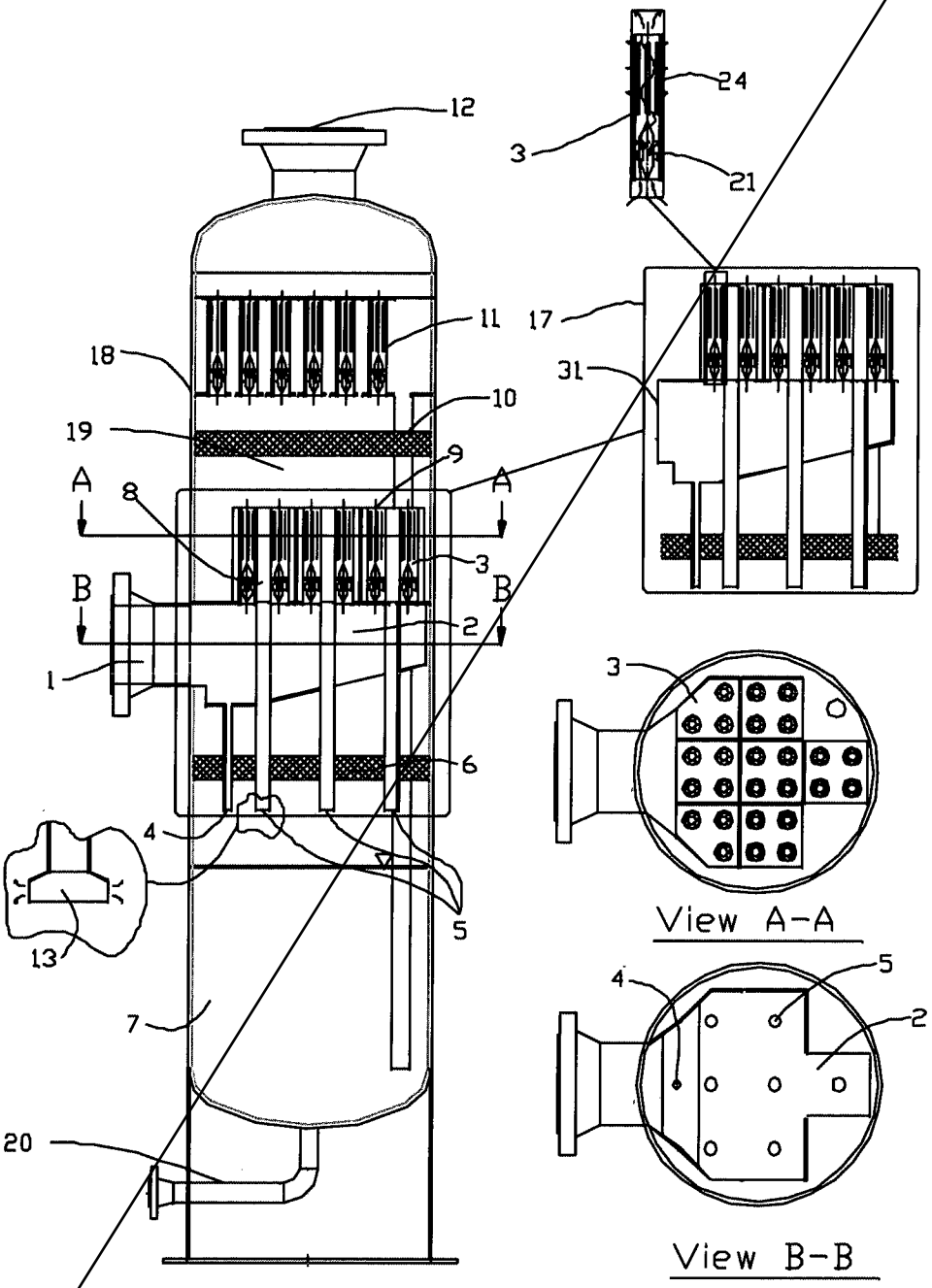

Figure 1

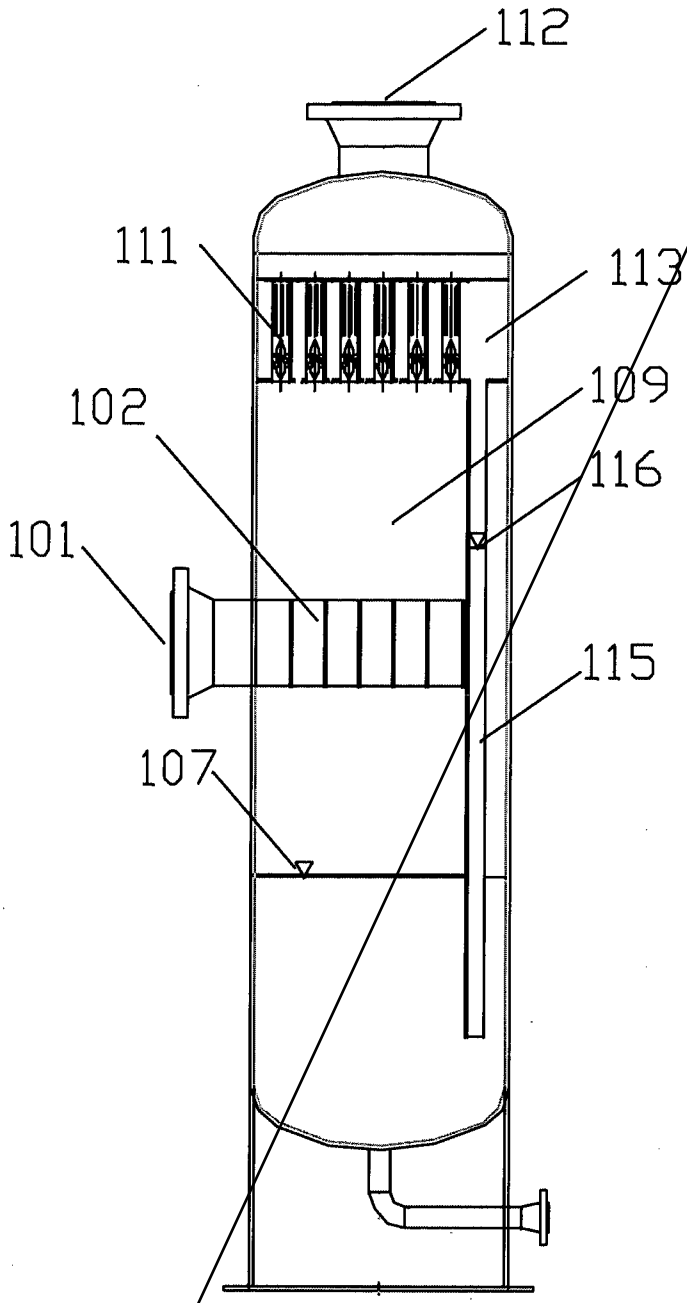

Figure 2

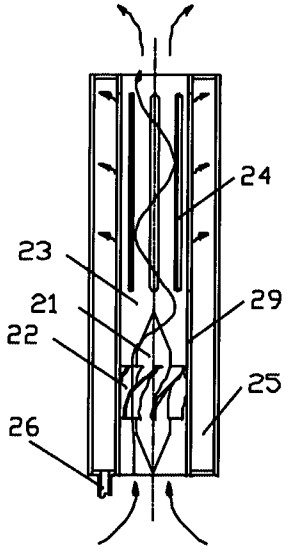

Figure 3a

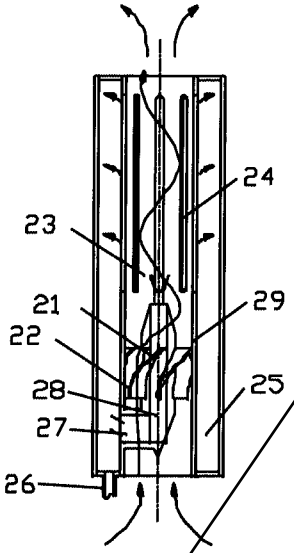

Figure 3b

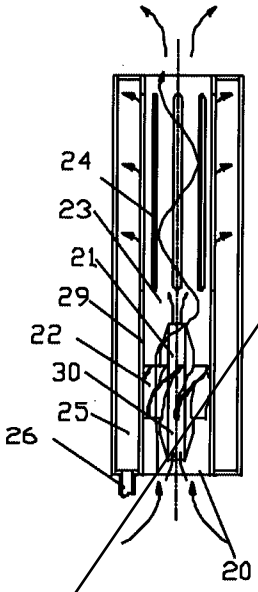

Figure 3c

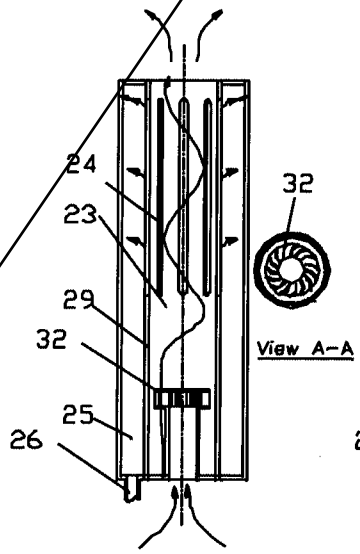

Figure 3d

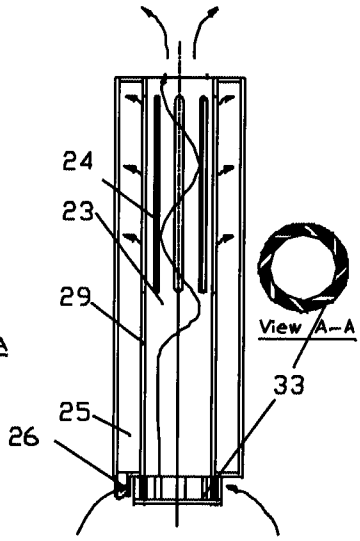

Figure 3e

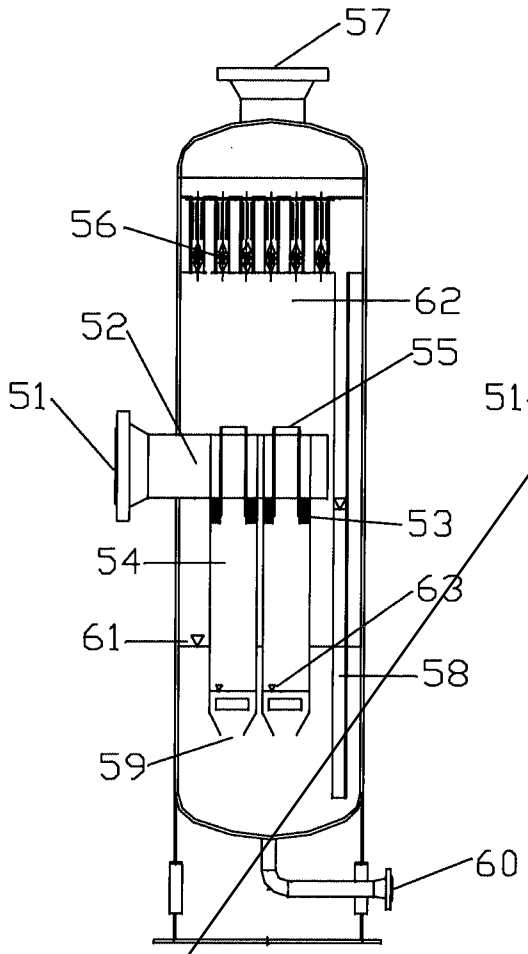

Figure 4a

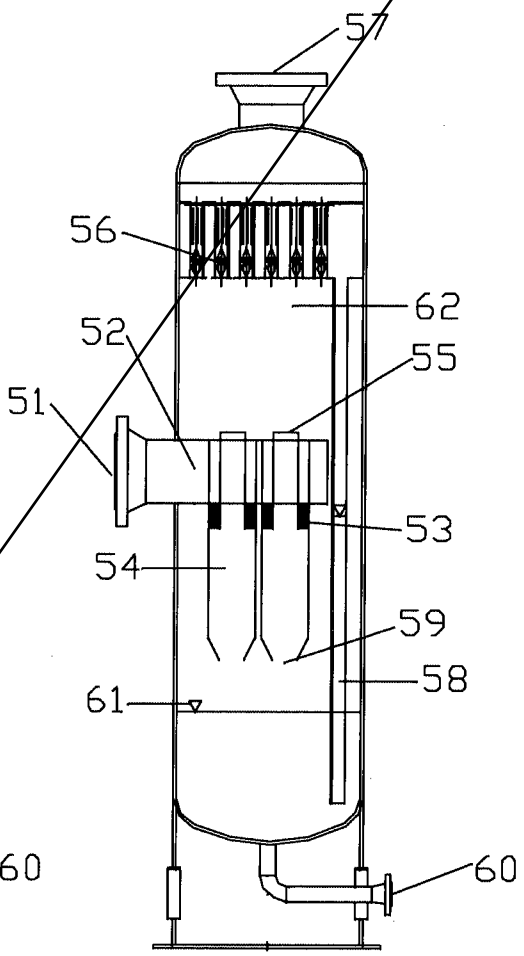

Figure 4b

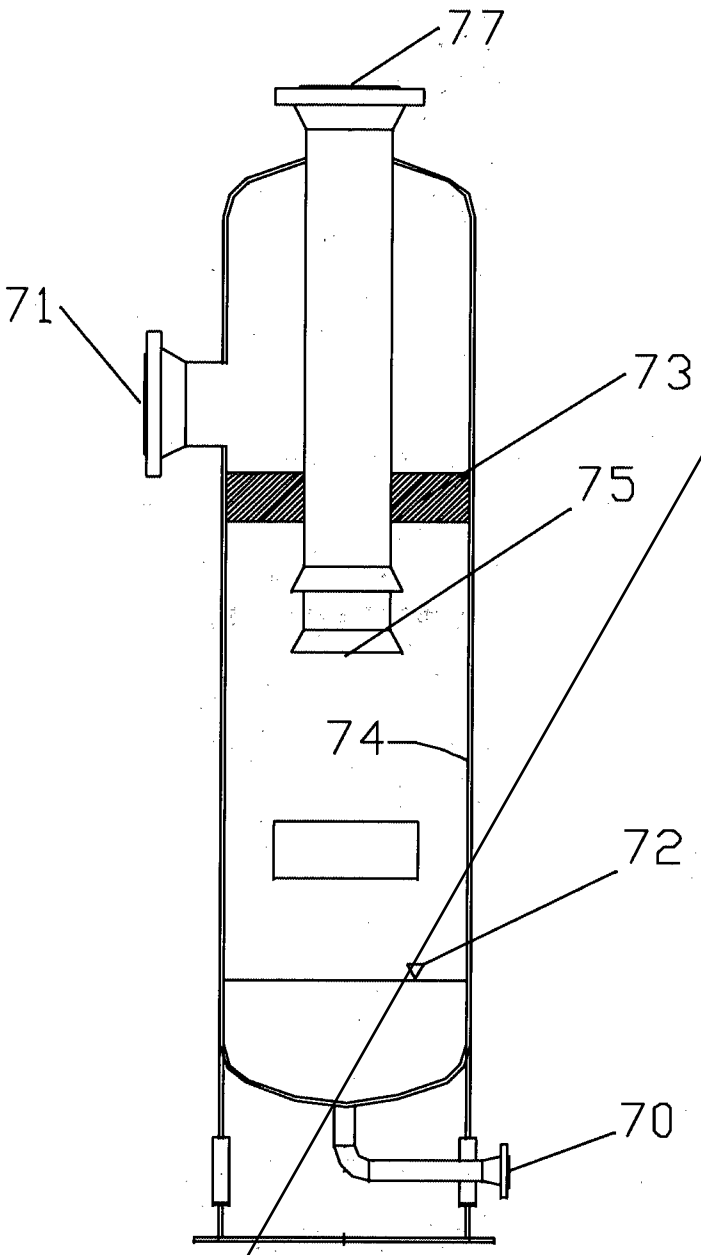

Figure 5

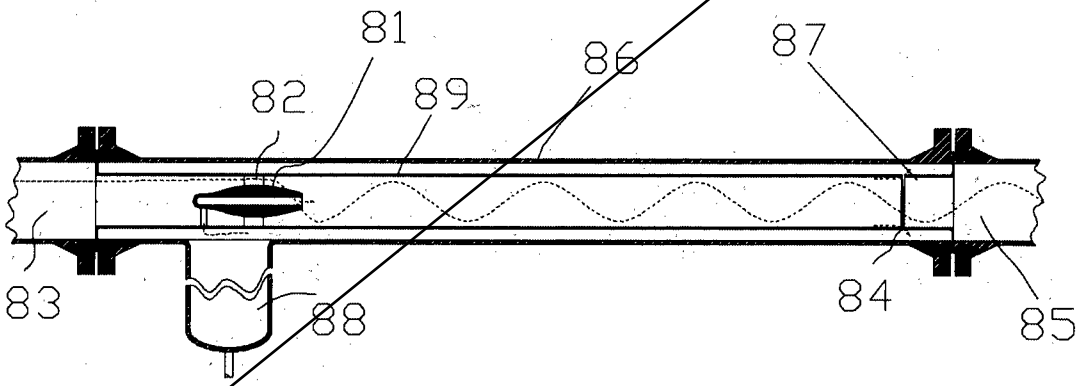

Figure 6

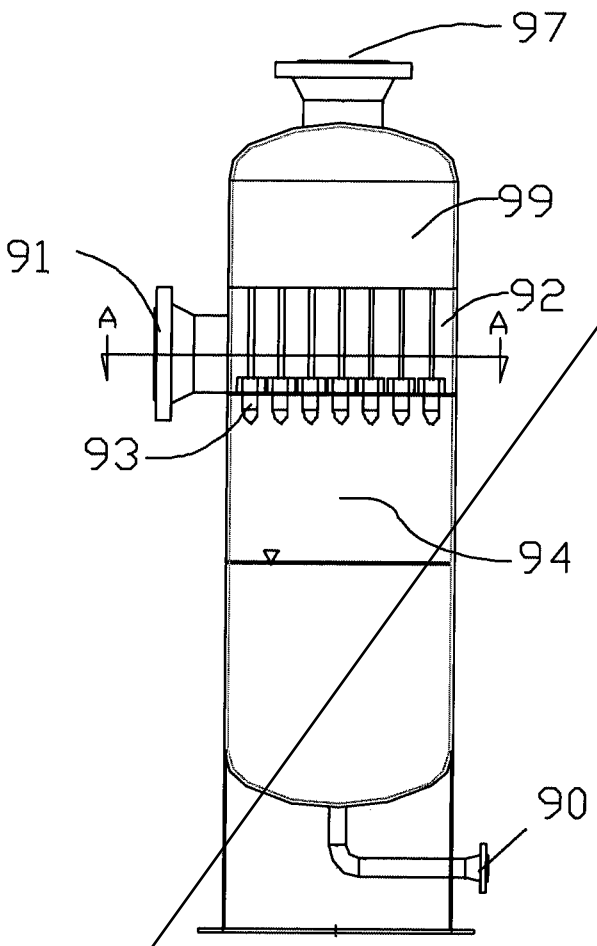

Figure 7a

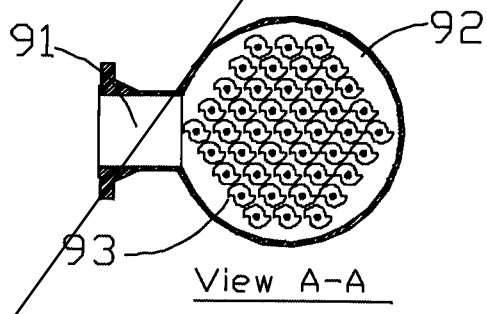

Figure 7b

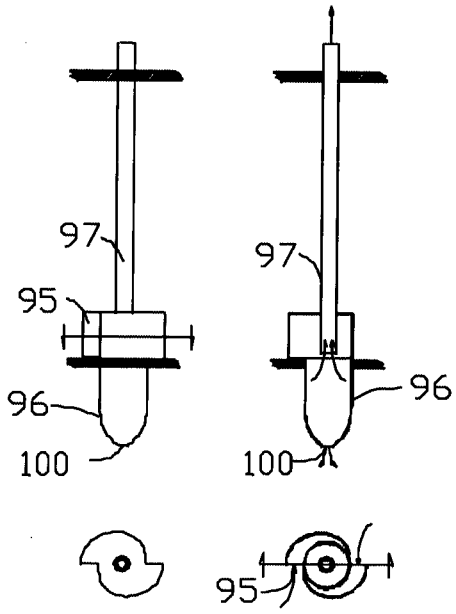

Figure 7c

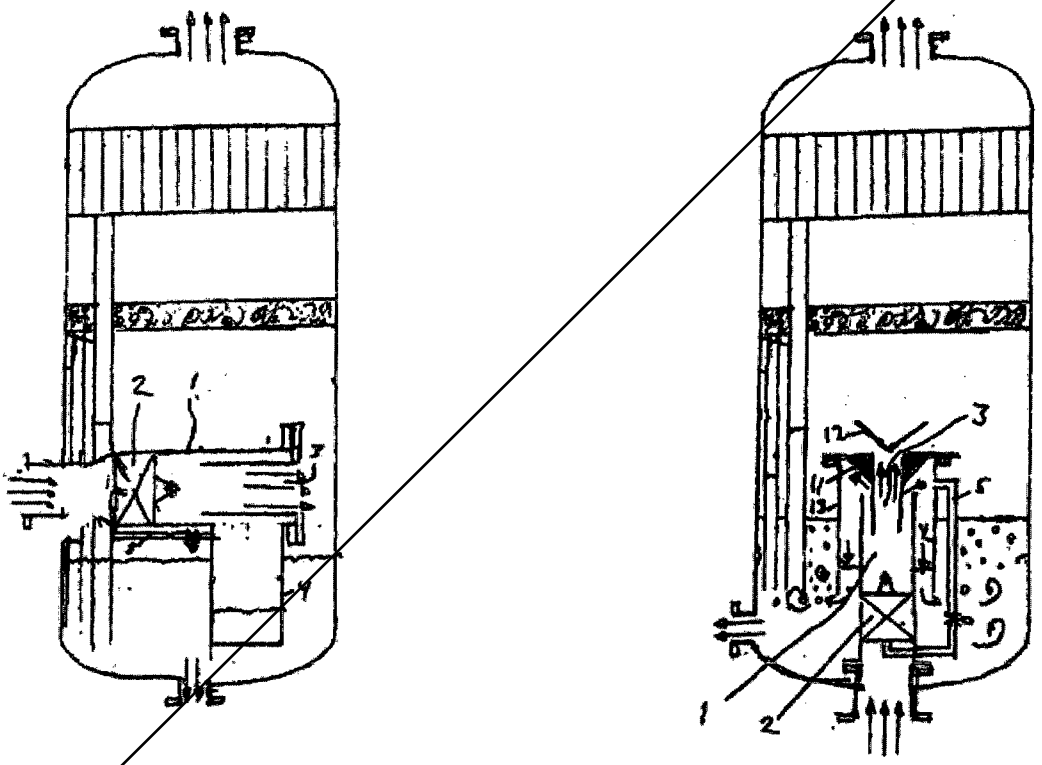

Figure 8