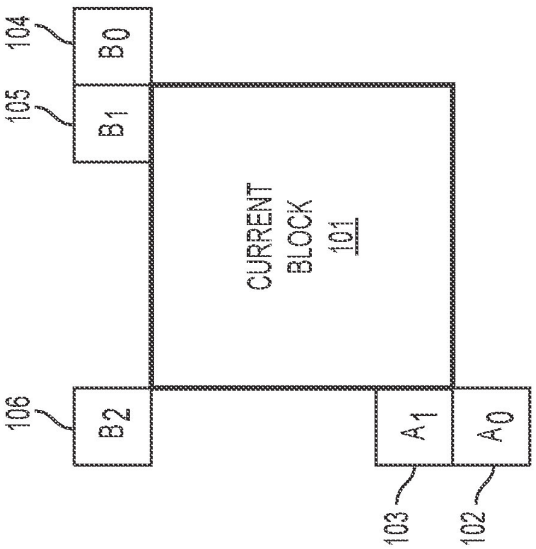

FIG. 1
(Related Art)

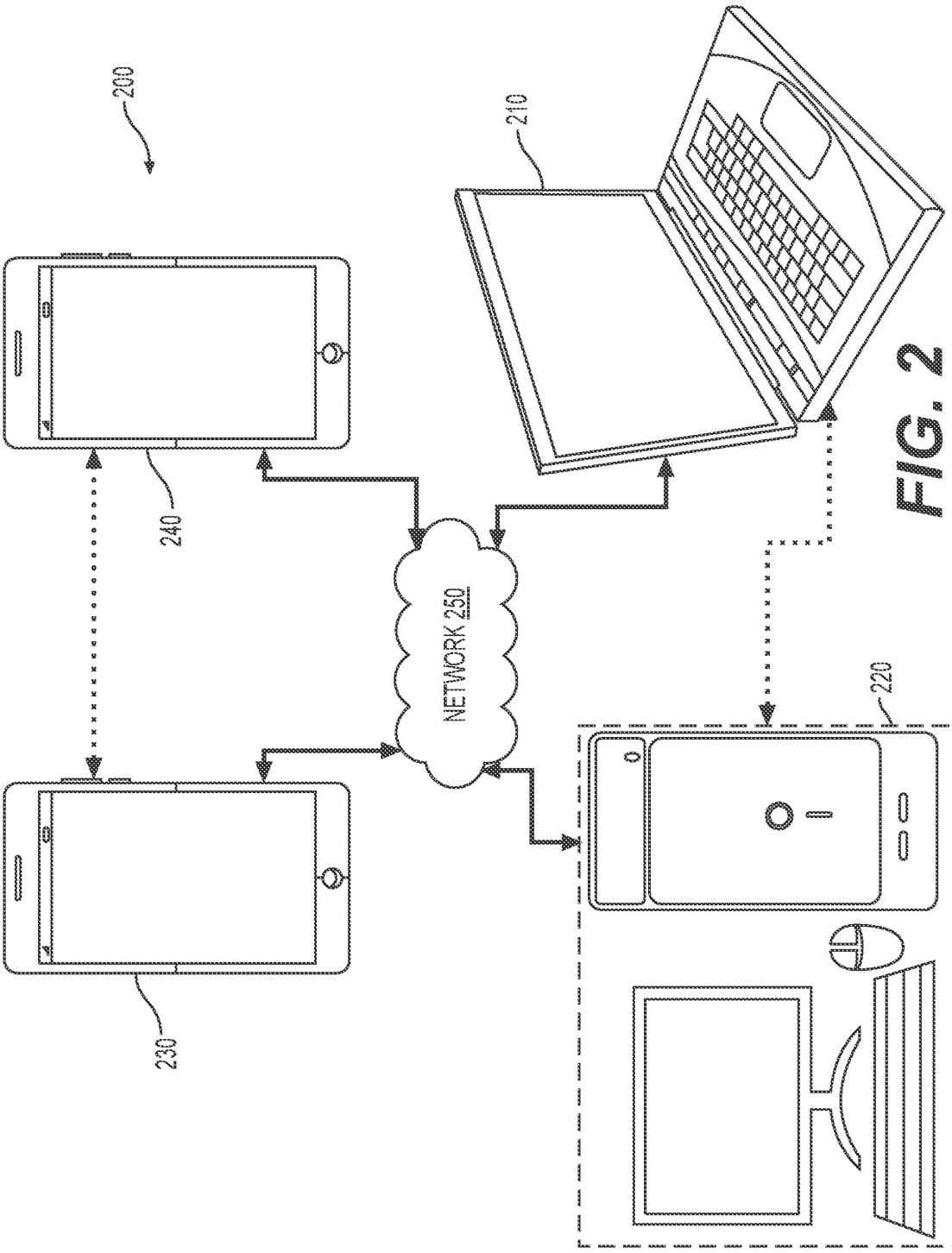

FIG. 2

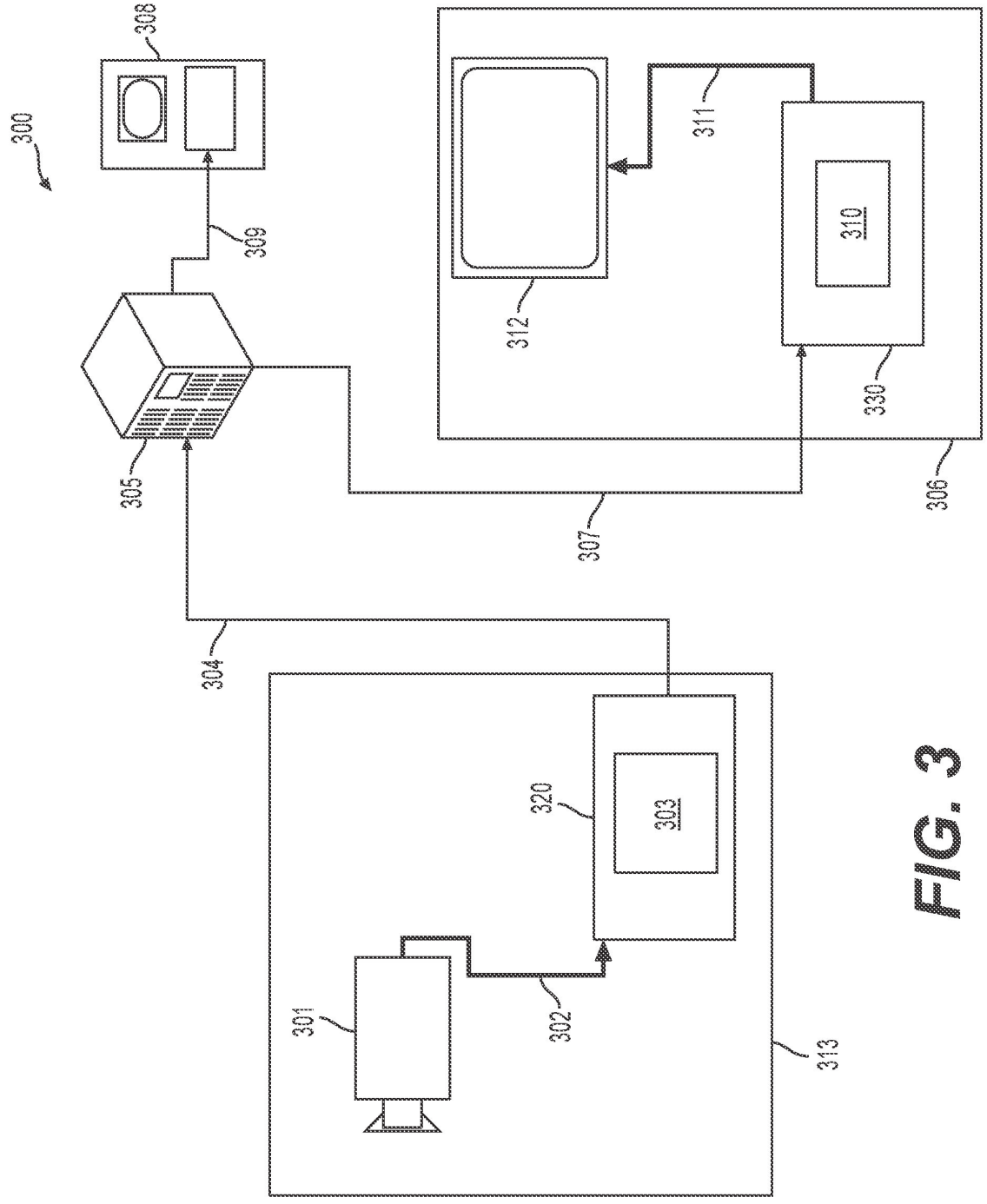

FIG. 3

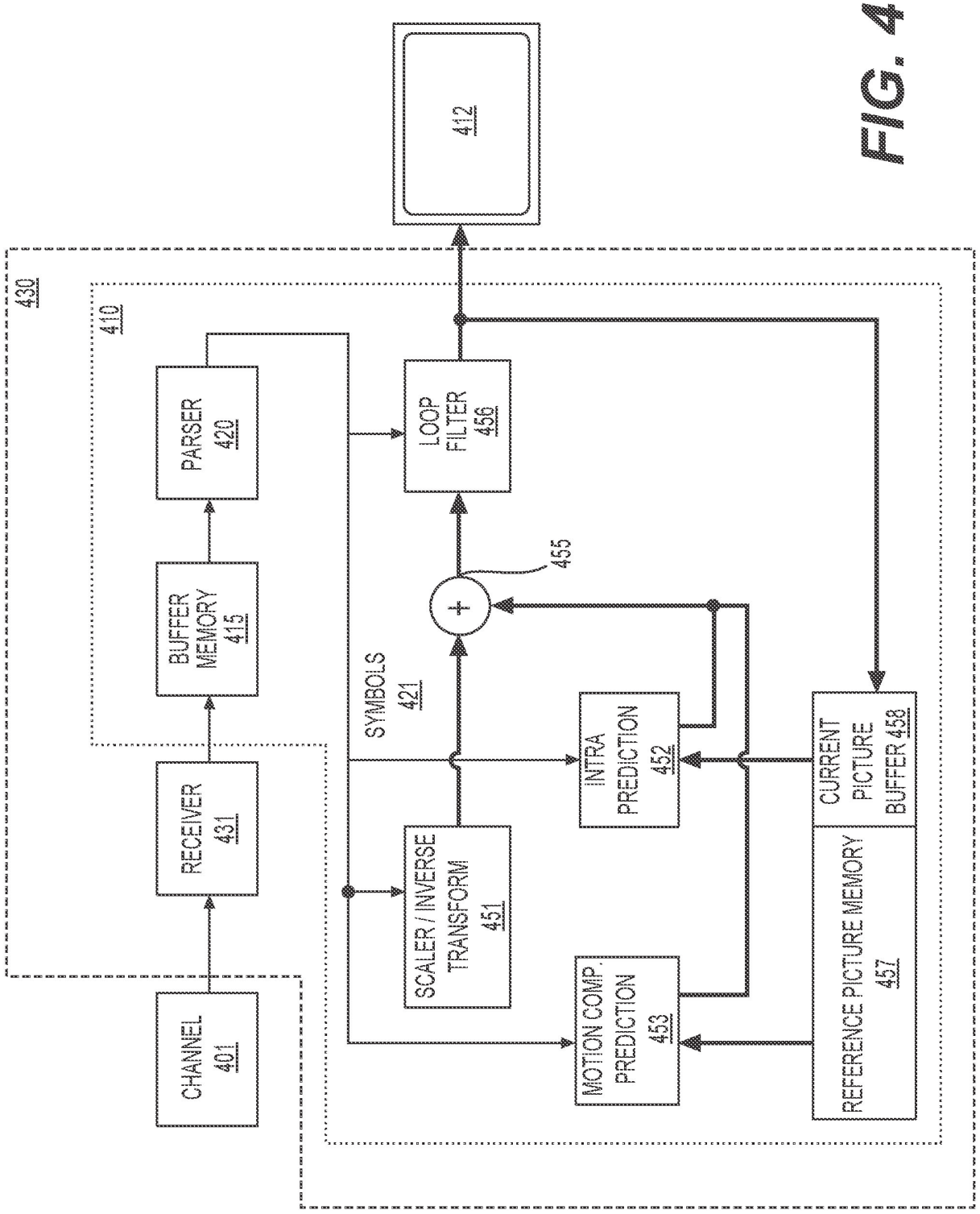
412
430
410
PARSER 420
BUFFER MEMORY 415
RECEIVER 431
CHANNEL 401
LOOP FILTER 456
455
+
SYMBOLS 421
SCALER / INVERSE TRANSFORM 451
INTRA PREDICTION 452
MOTION COMP. PREDICTION 453
CURRENT PICTURE BUFFER 458
REFERENCE PICTURE MEMORY 457

FIG. 4

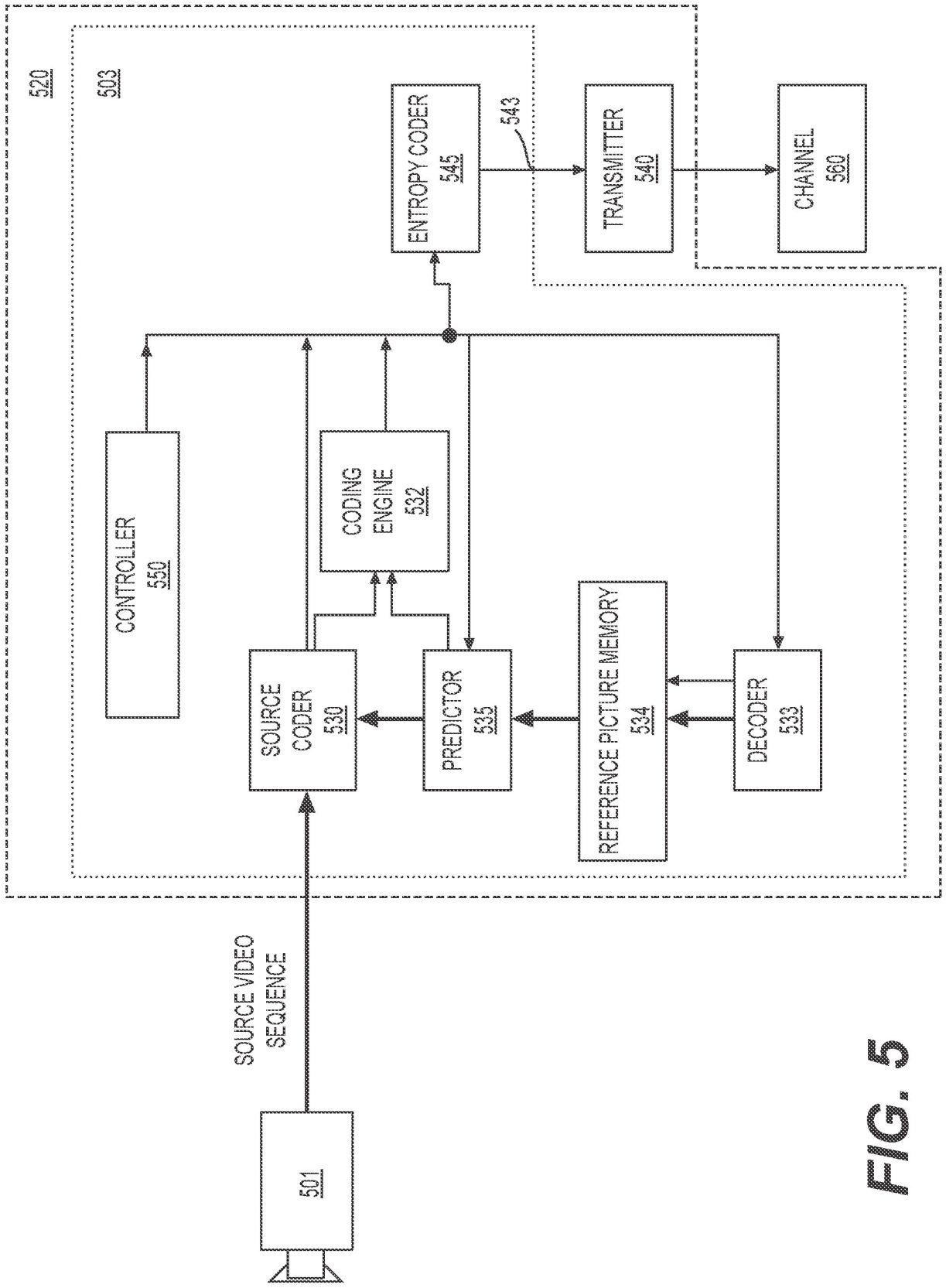
520
503
ENTROPY CODER
545
543
TRANSMITTER
540
CHANNEL
560
CONTROLLER
550
CODING
ENGINE
532
SOURCE
CODER
530
PREDICTOR
535
REFERENCE PICTURE MEMORY
534
DECODER
533
SOURCE VIDEO
SEQUENCE
501

FIG. 5

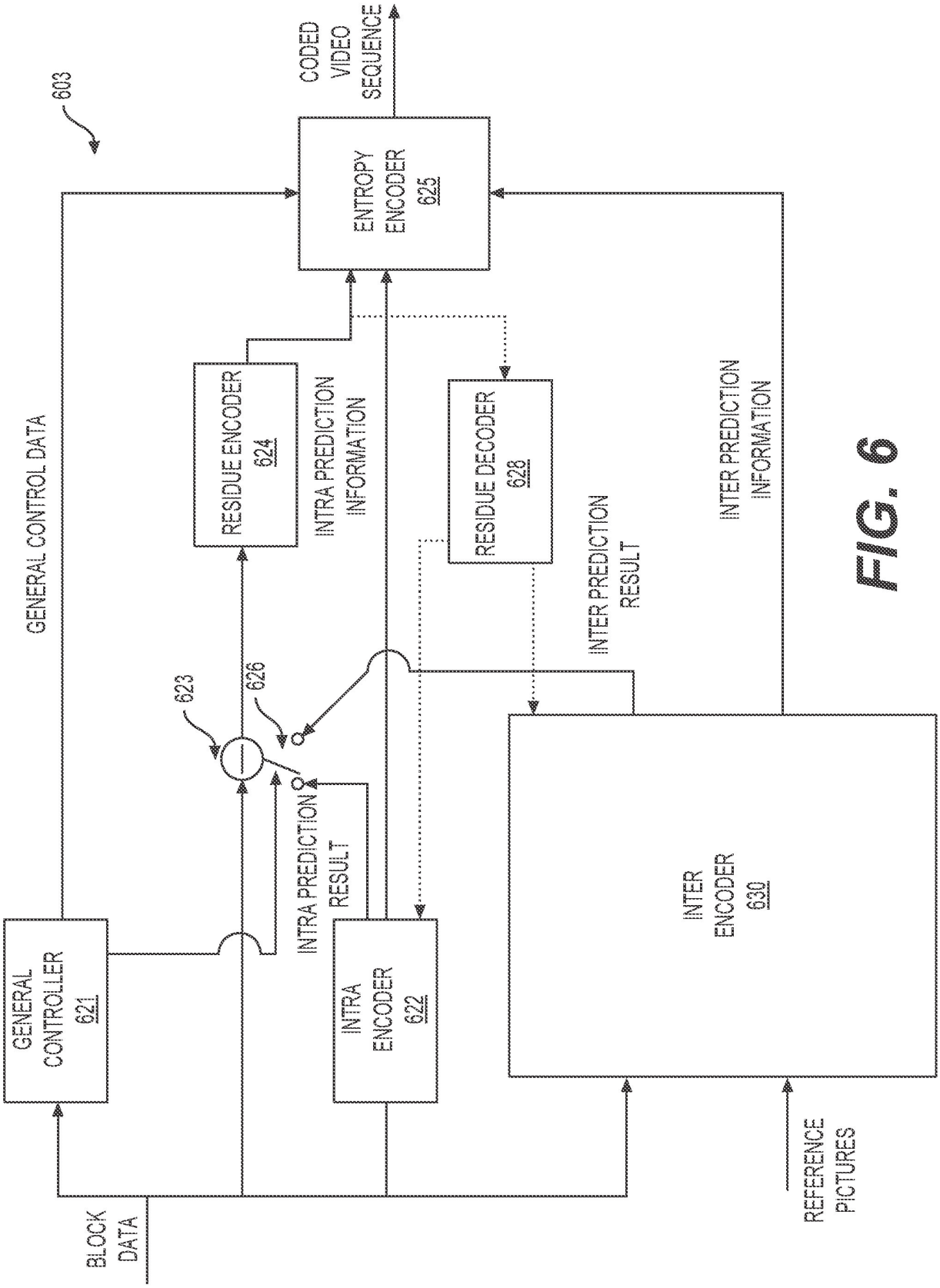
603
CODED VIDEO SEQUENCE
ENTROPY ENCODER 625
GENERAL CONTROL DATA
RESIDUE ENCODER 624
INTRA PREDICTION INFORMATION
RESIDUE DECODER 628
INTER PREDICTION RESULT
INTER PREDICTION INFORMATION
623
626
INTRA PREDICTION RESULT
GENERAL CONTROLLER 621
INTRA ENCODER 622
INTER ENCODER 630
BLOCK DATA
REFERENCE PICTURES

FIG. 6

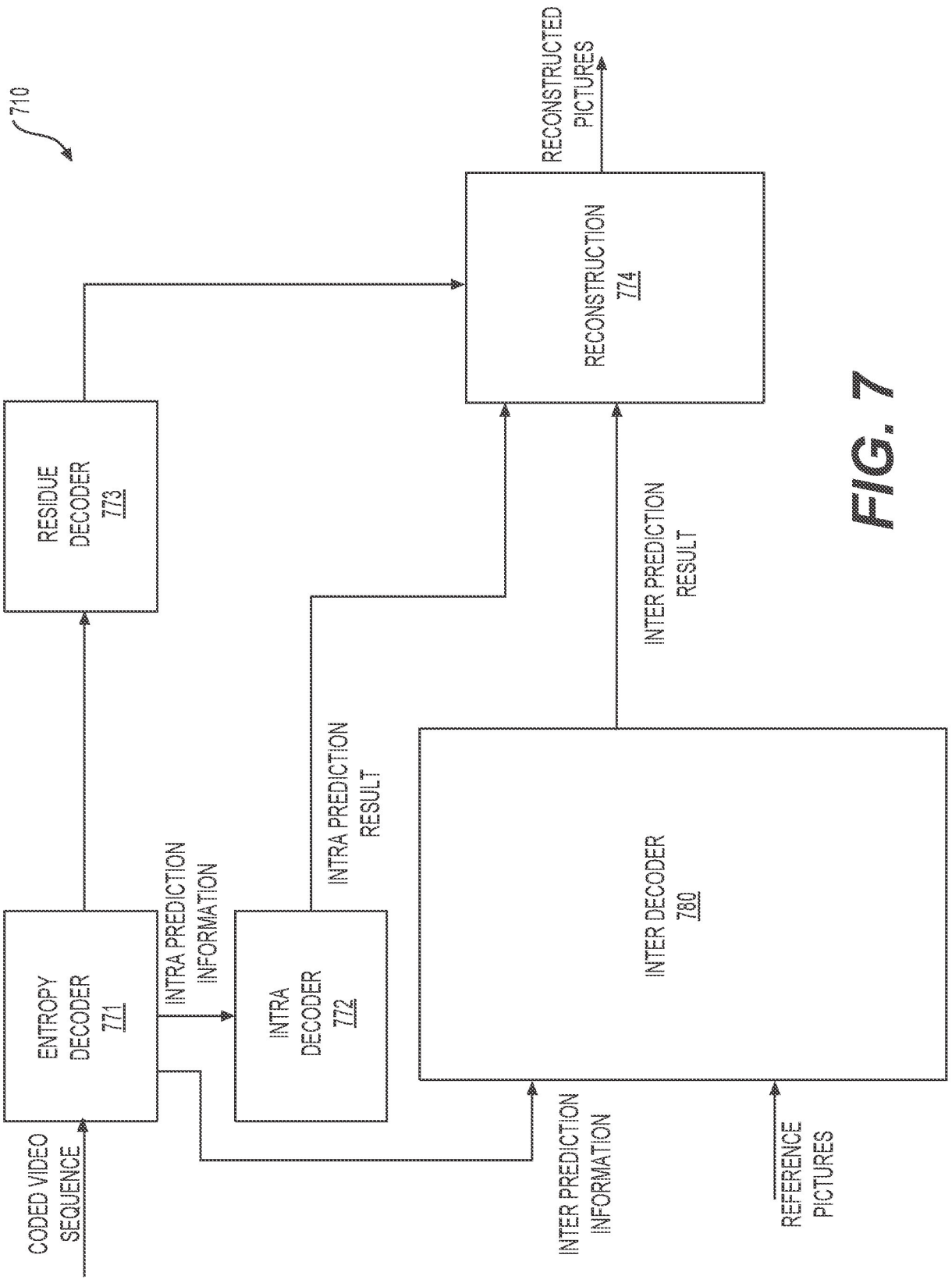
710
CODED VIDEO SEQUENCE
ENTROPY DECODER 771
INTRA PREDICTION INFORMATION
INTRA DECODER 772
INTRA PREDICTION RESULT
RESIDUE DECODER 773
INTER PREDICTION INFORMATION
INTER DECODER 780
REFERENCE PICTURES
INTER PREDICTION RESULT
RECONSTRUCTION 774
RECONSTRUCTED PICTURES

FIG. 7

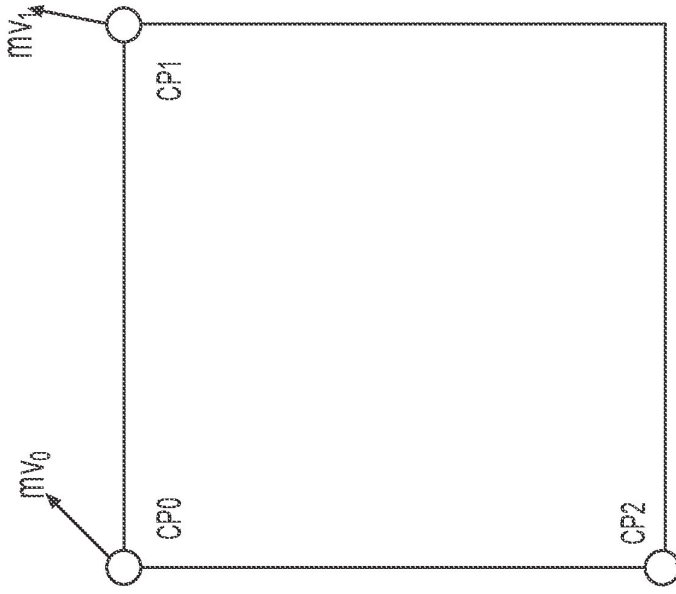

FIG. 8B

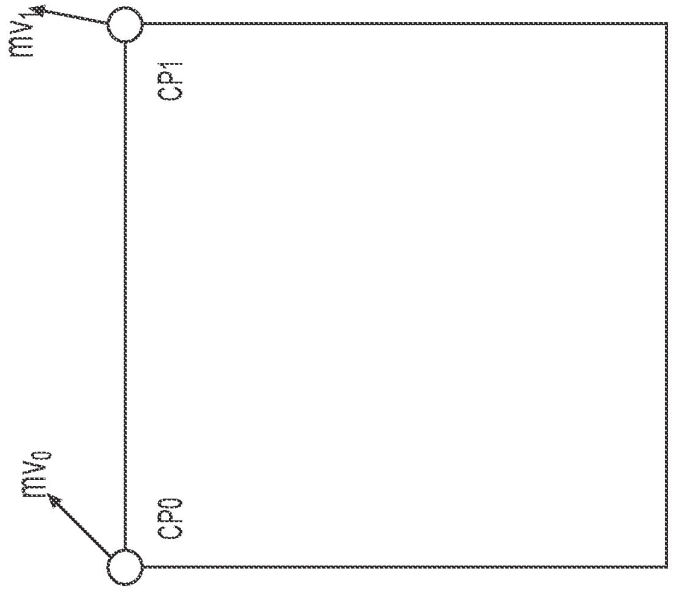

FIG. 8A

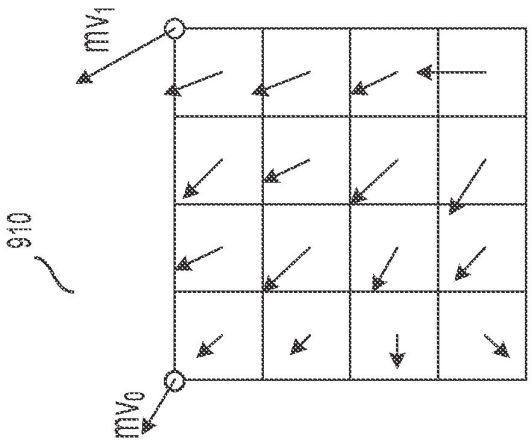

FIG. 9

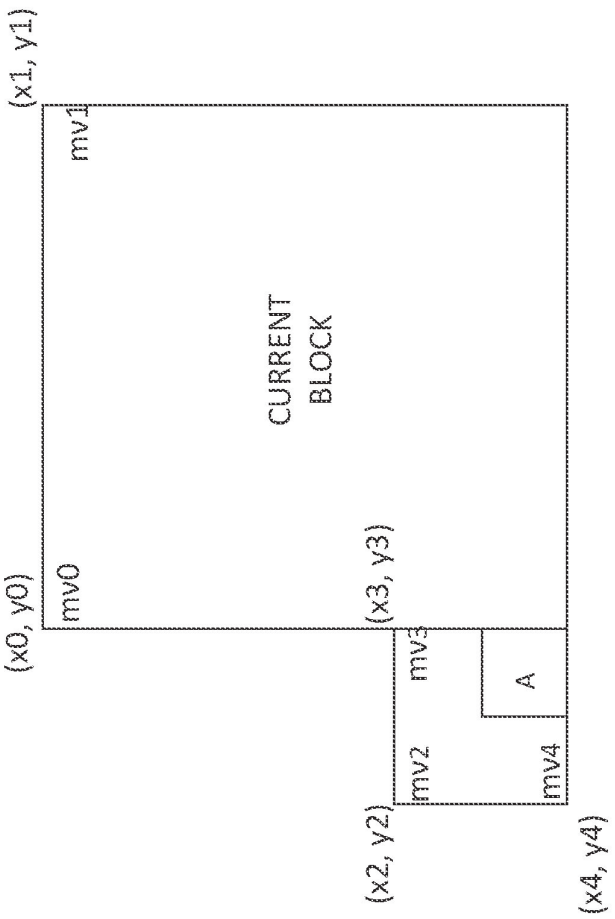

FIG. 10

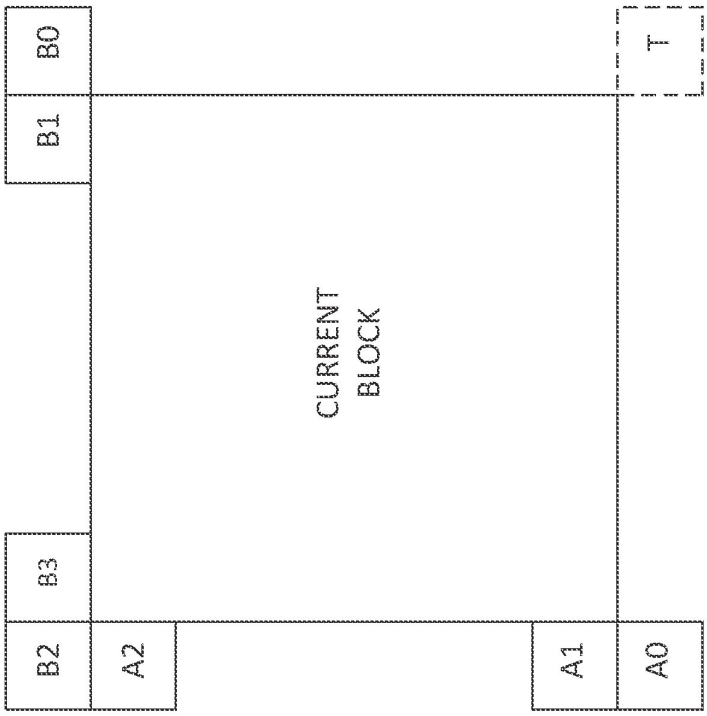

FIG. 11

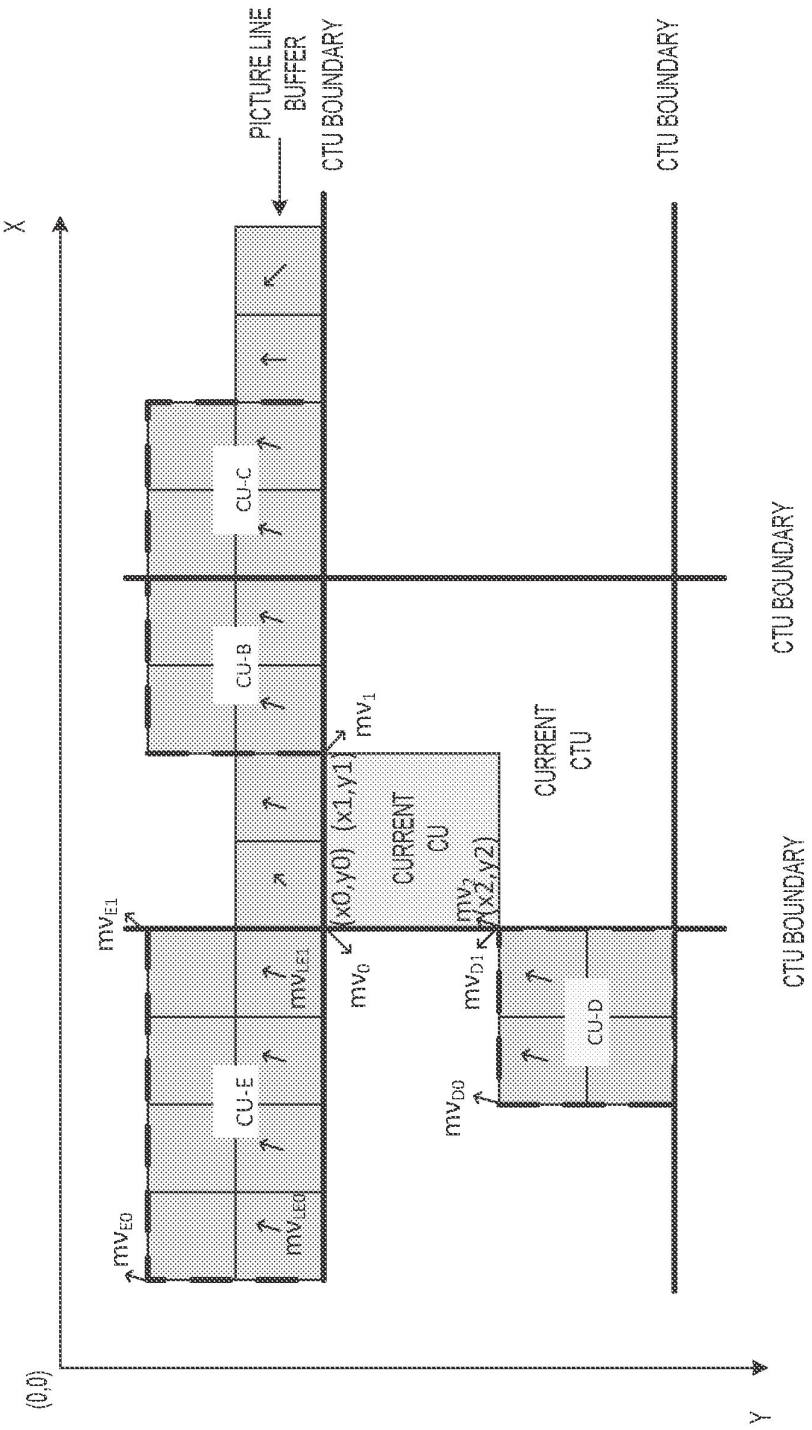
X
(0,0)
Y
PICTURE LINE BUFFER
CTU BOUNDARY
CTU BOUNDARY
CTU BOUNDARY
CTU BOUNDARY
CURRENT CTU
CURRENT CU
(x0,y0)
(x1,y1)
(x2,y2)
CU-B
CU-C
CU-D
CU-E
mv_0
mv_1
mv_2
mv_{D0}
mv_{D1}
mv_{E0}
mv_{E1}
mv_{E0}
mv_{E1}

FIG. 12

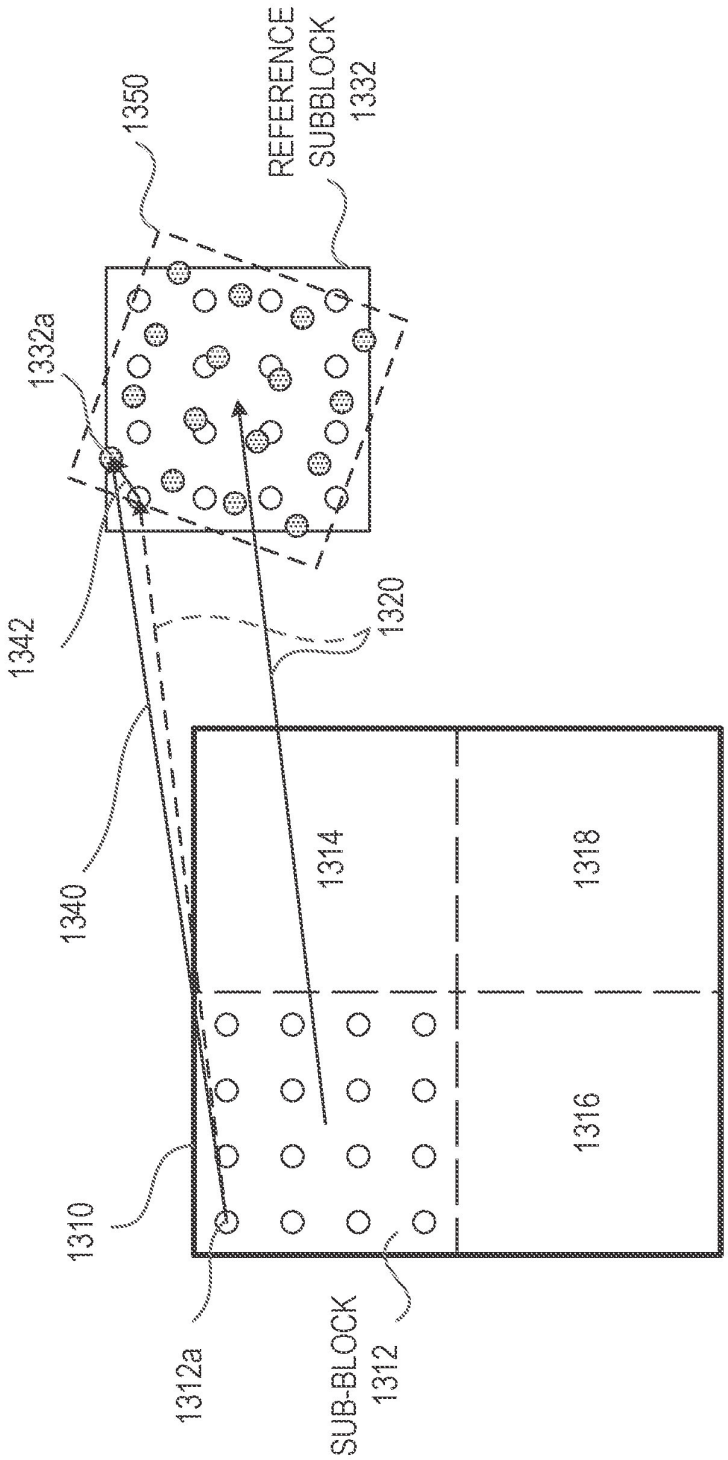
REFERENCE SUBBLOCK 1332
1350
1332a
1342
1320
1340
1314
1318
1316
1310
1312a
SUB-BLOCK 1312

FIG. 13

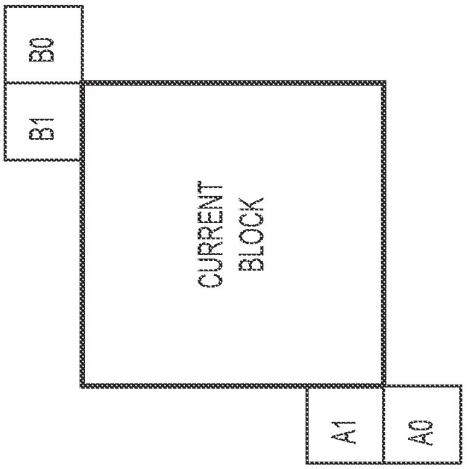

FIG. 14

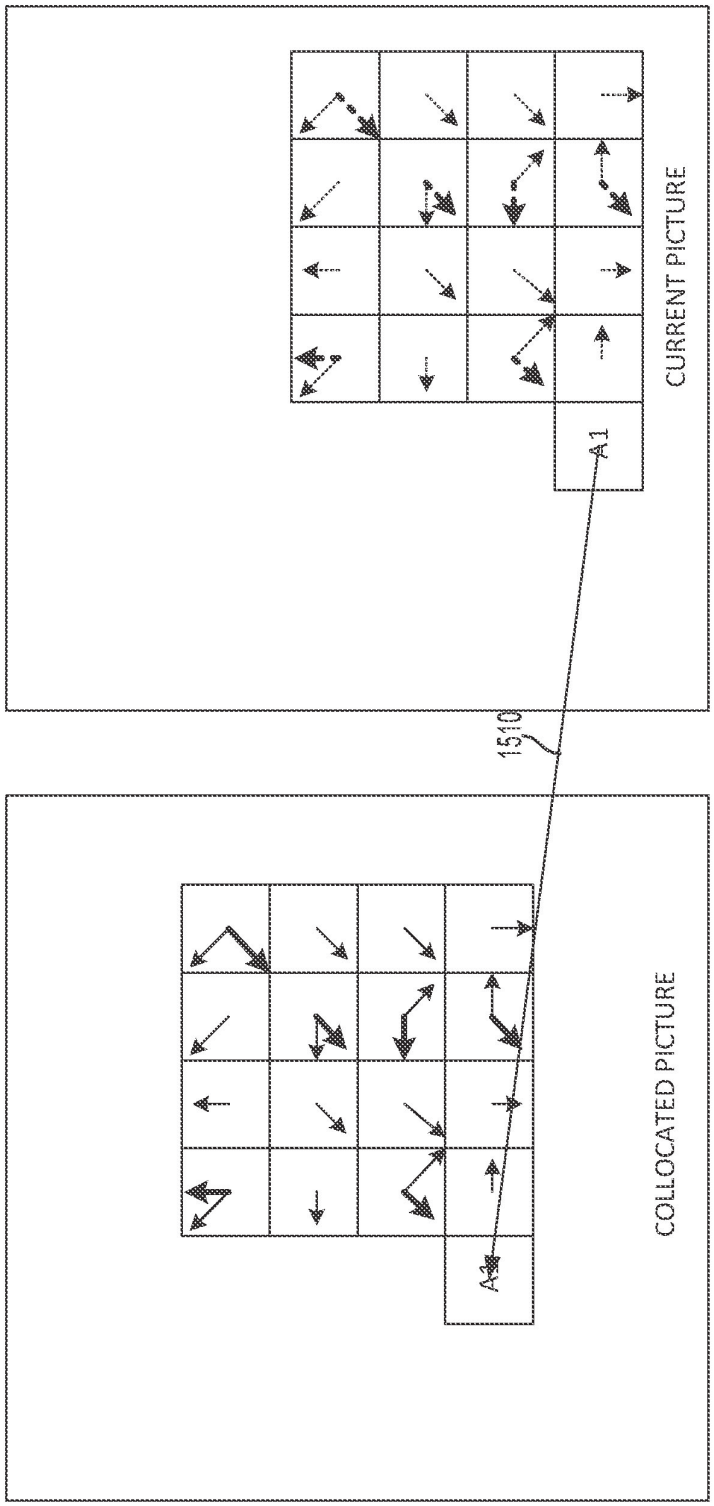

FIG. 15

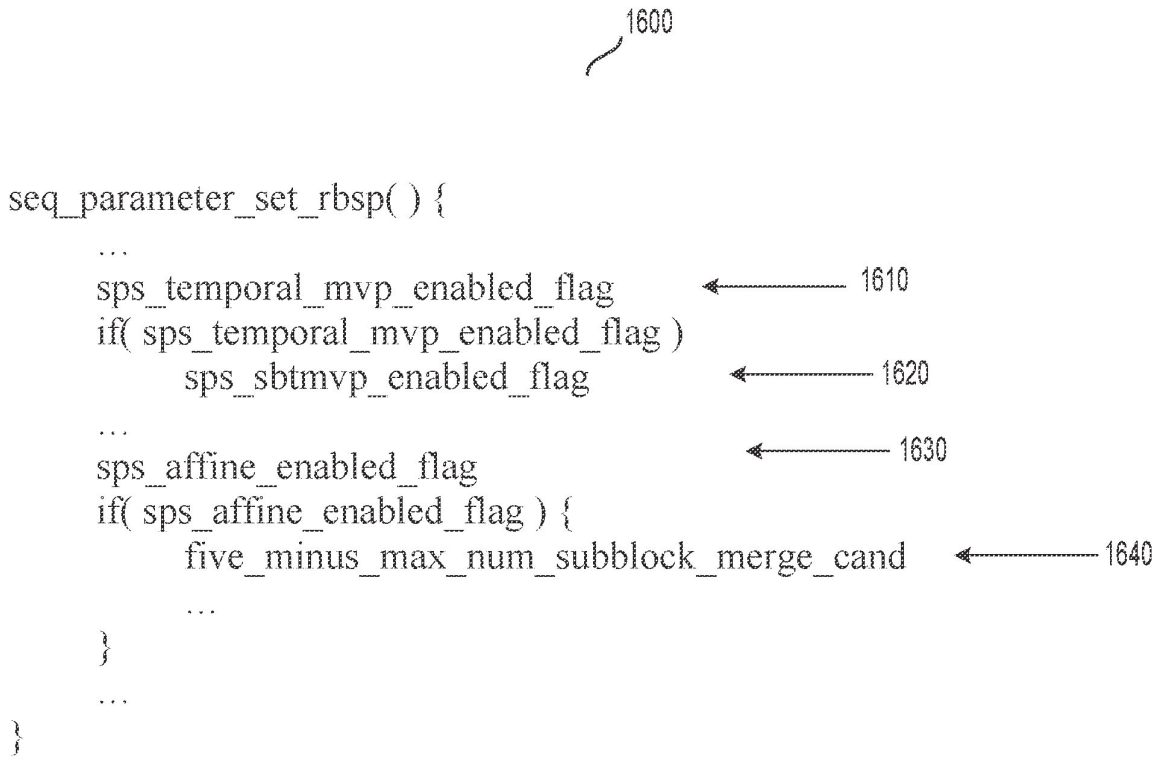
1600
seq_parameter_set_rbsp( ) {
…
sps_temporal_mvp_enabled_flag
1610
if(sps_temporal_mvp_enabled_flag)
sps_sbtmvp_enabled_flag
1620
…
sps_affine_enabled_flag
1630
if(sps_affine_enabled_flag) {
five_minus_max_num_subblock_merge_cand
1640
…
}
…
}

FIG. 16

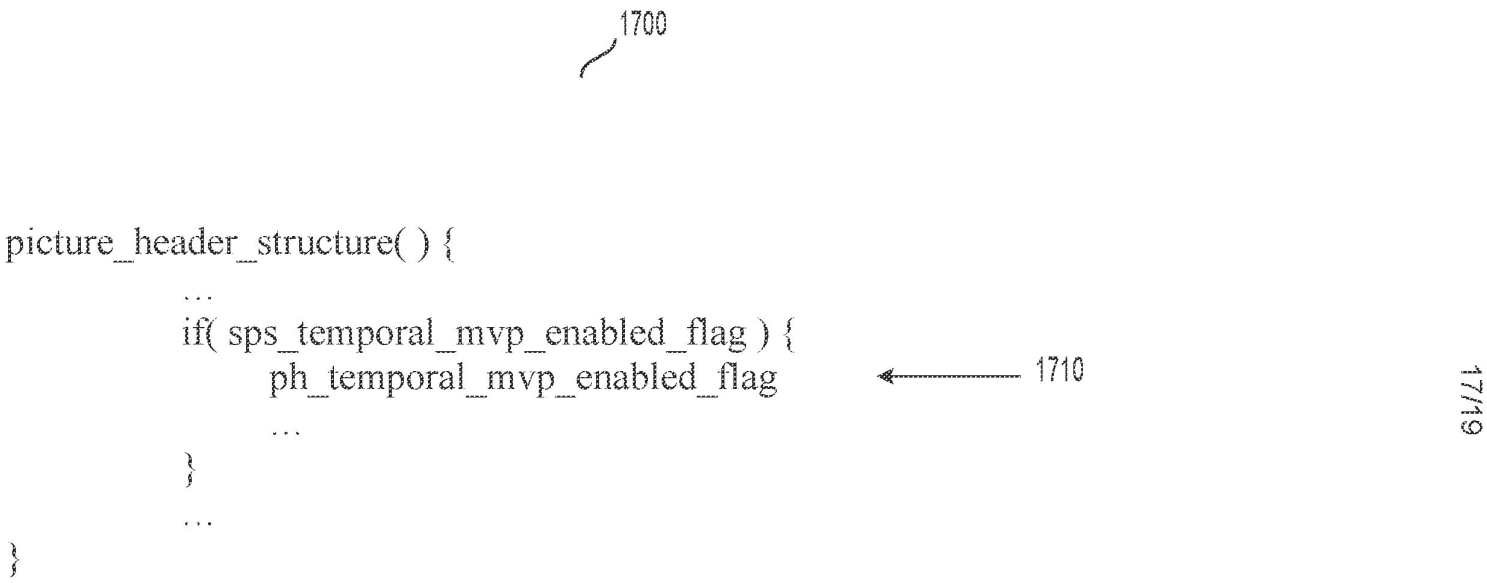
1700
picture_header_structure( ) {
…
if(sps_temporal_mvp_enabled_flag) {
ph_temporal_mvp_enabled_flag
1710
…
}
…
}

FIG. 17

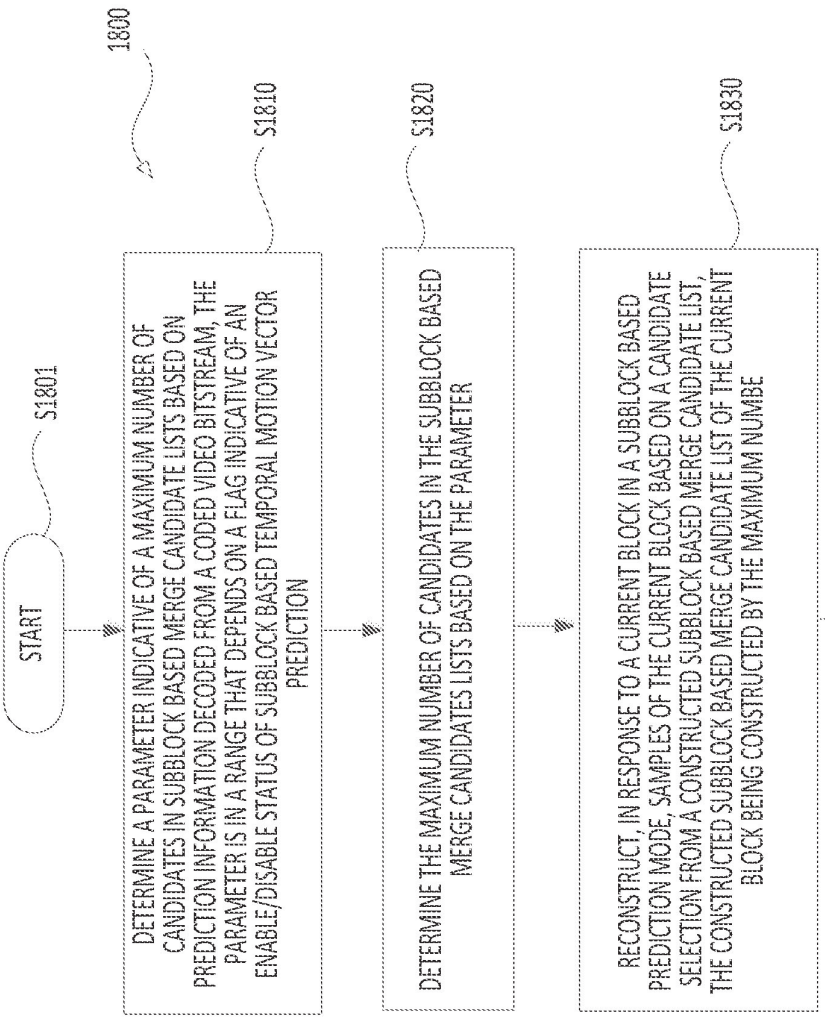
1800
START
S1801
DETERMINE A PARAMETER INDICATIVE OF A MAXIMUM NUMBER OF CANDIDATES IN SUBBLOCK BASED MERGE CANDIDATE LISTS BASED ON PREDICTION INFORMATION DECODED FROM A CODED VIDEO BITSTREAM, THE PARAMETER IS IN A RANGE THAT DEPENDS ON A FLAG INDICATIVE OF AN ENABLE/DISABLE STATUS OF SUBBLOCK BASED TEMPORAL MOTION VECTOR PREDICTION
S1810
DETERMINE THE MAXIMUM NUMBER OF CANDIDATES IN THE SUBBLOCK BASED MERGE CANDIDATES LISTS BASED ON THE PARAMETER
S1820
RECONSTRUCT, IN RESPONSE TO A CURRENT BLOCK IN A SUBBLOCK BASED PREDICTION MODE, SAMPLES OF THE CURRENT BLOCK BASED ON A CANDIDATE SELECTION FROM A CONSTRUCTED SUBBLOCK BASED MERGE CANDIDATE LIST, THE CONSTRUCTED SUBBLOCK BASED MERGE CANDIDATE LIST OF THE CURRENT BLOCK BEING CONSTRUCTED BY THE MAXIMUM NUMBE
S1830
STOP
S1899

FIG. 18

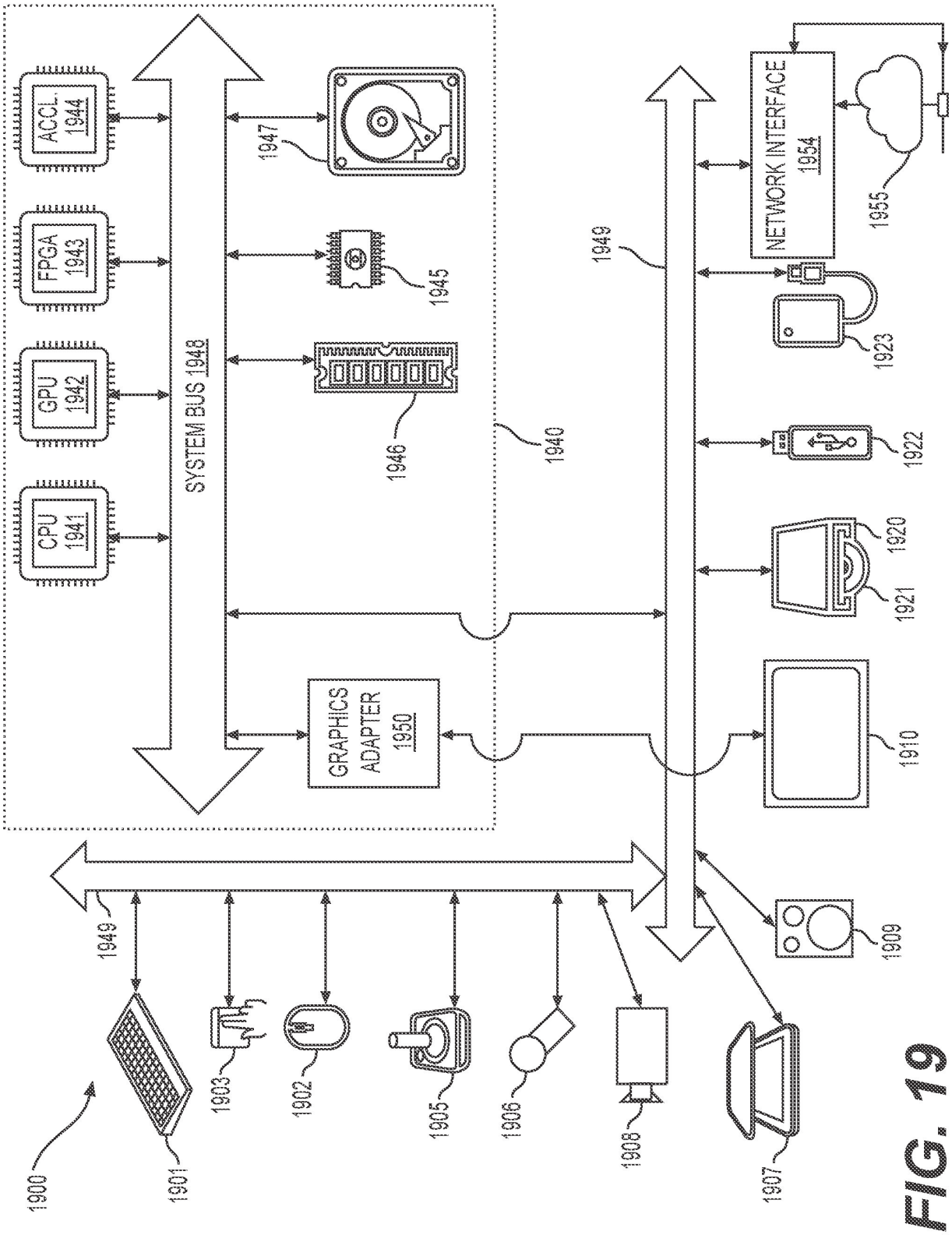
CPU 1941
GPU 1942
FPGA 1943
ACCL. 1944
SYSTEM BUS 1948
1947
1945
1946
1940
GRAPHICS ADAPTER 1950
1949
NETWORK INTERFACE 1954
1955
1923
1922
1920
1921
1910
1909
1900
1901
1903
1902
1905
1906
1908
1907

FIG. 19