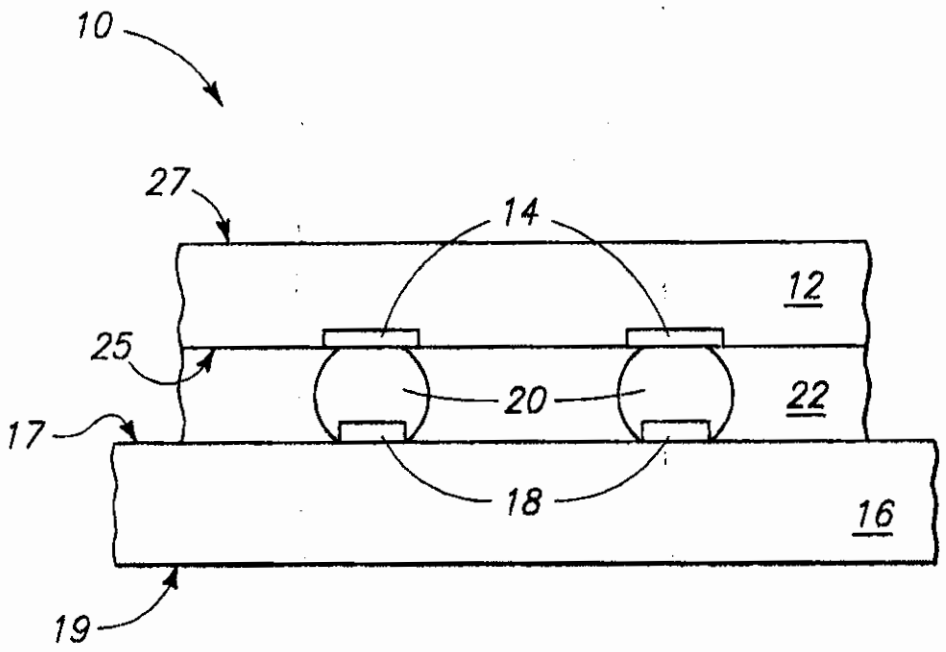

FIG 1
PRIOR ART

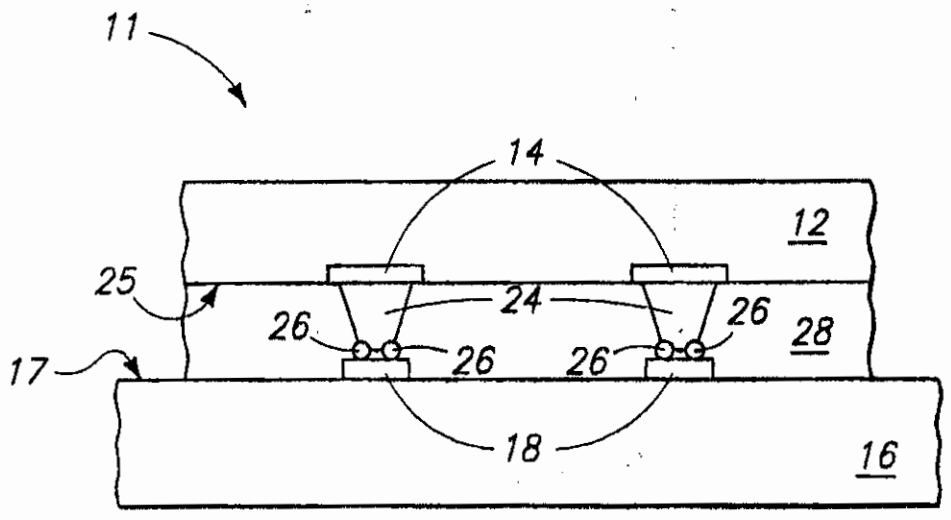

FIG 2
PRIOR ART

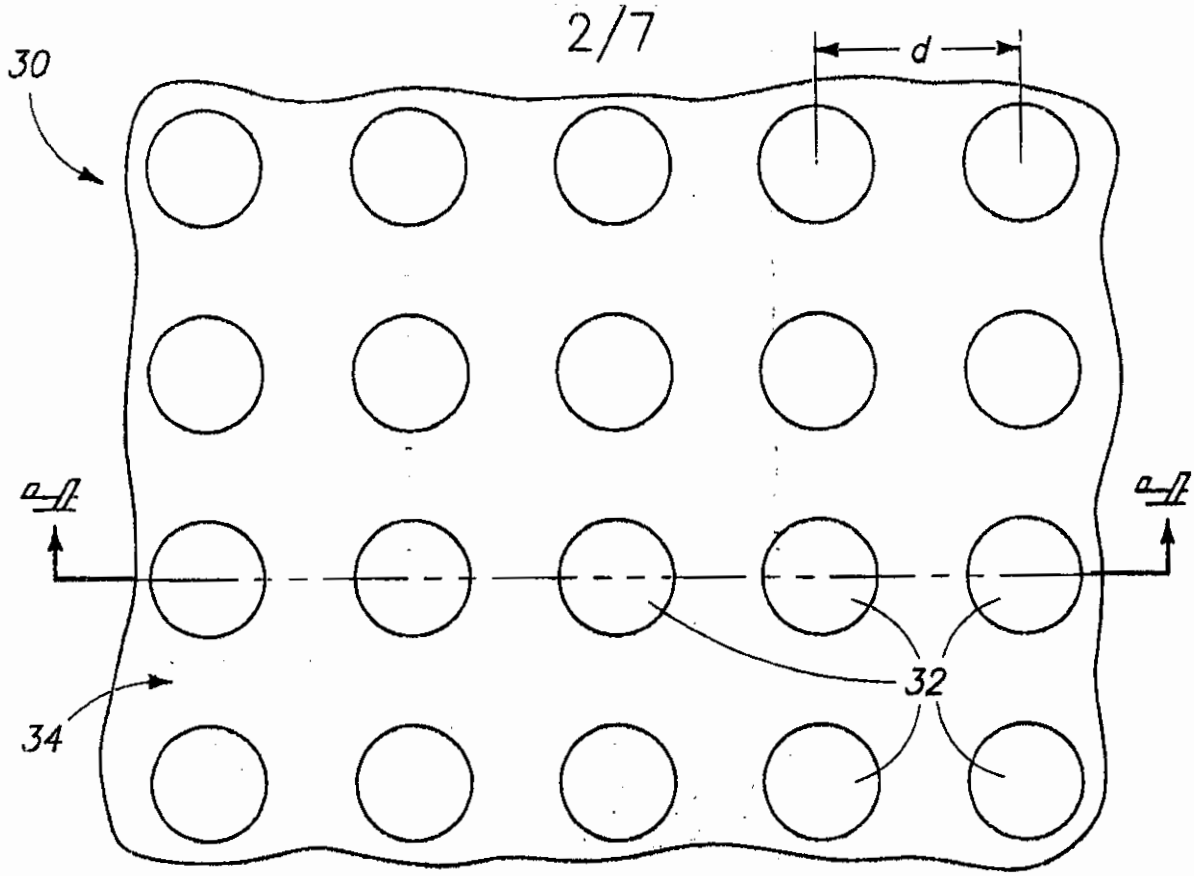

Fig 3

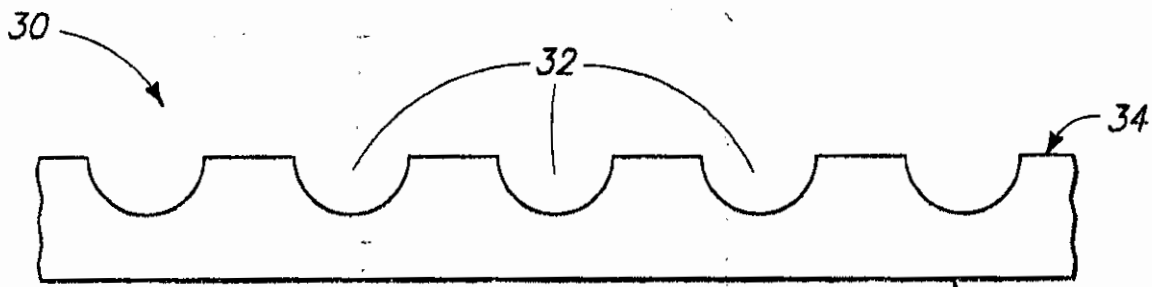

Fig 4

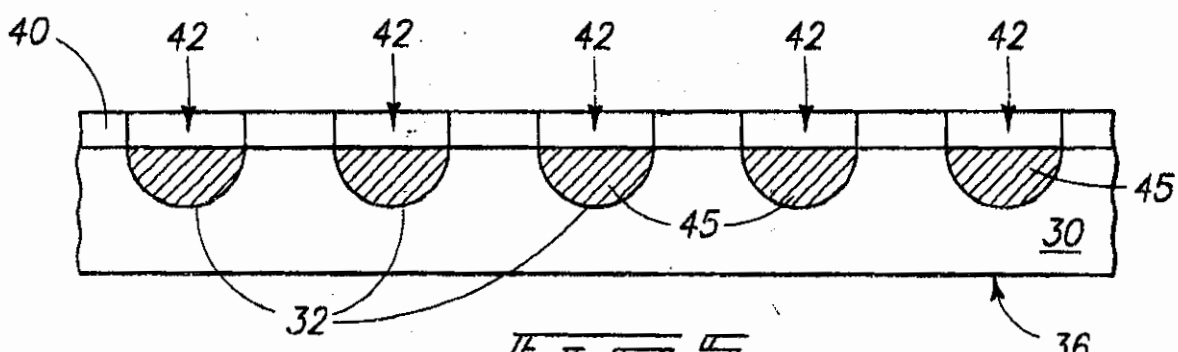

Fig 5

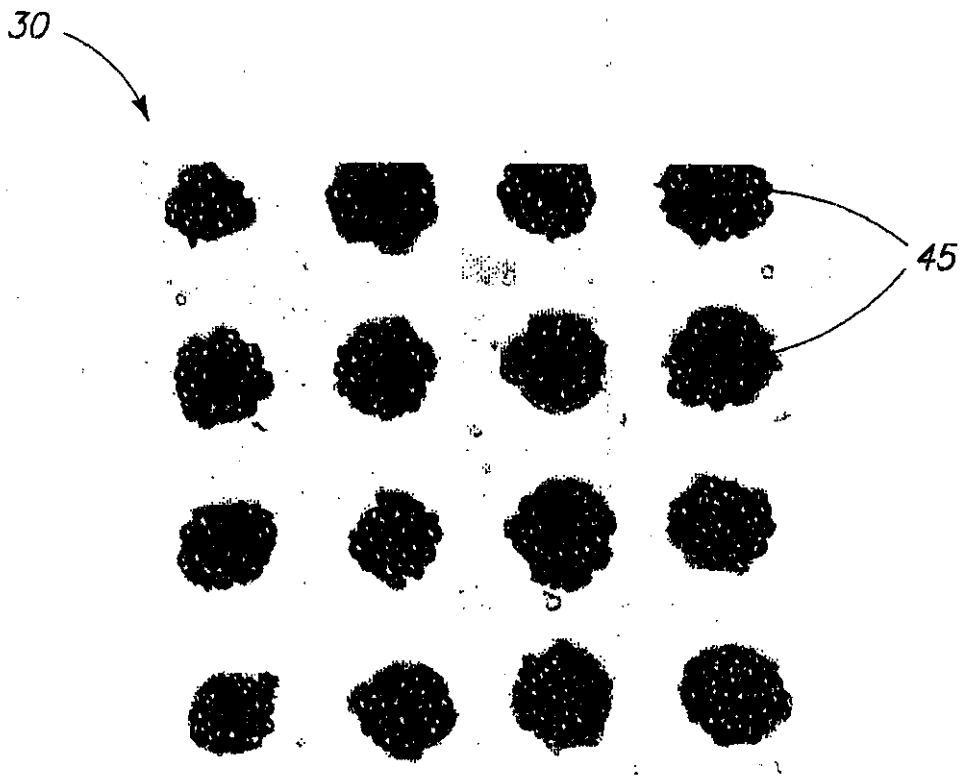

Фиг 6

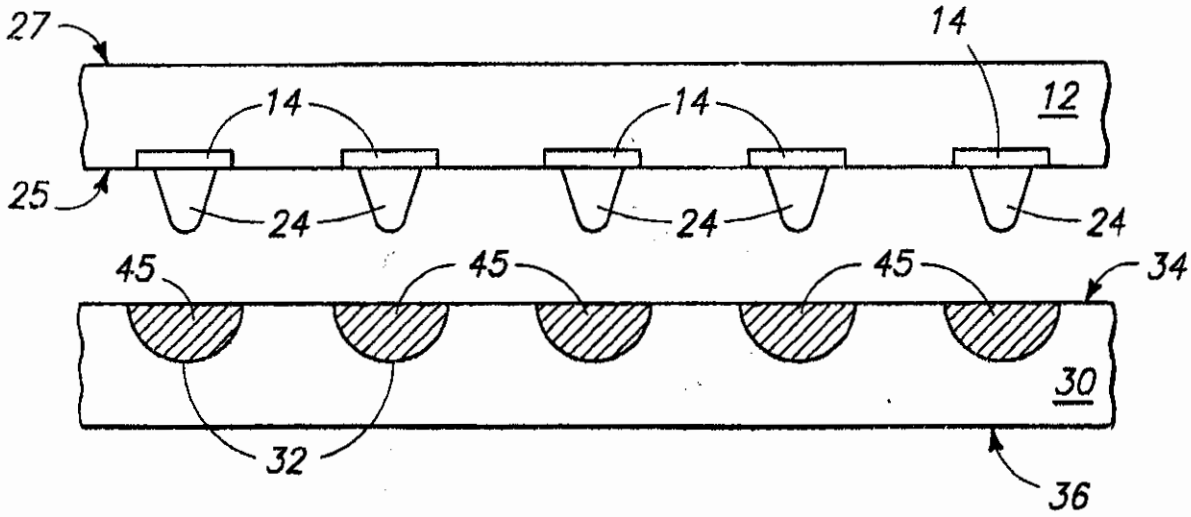
27
14
12
14
14
25
24
24
24
45
45
45
34
30
32
36

Fig. 11

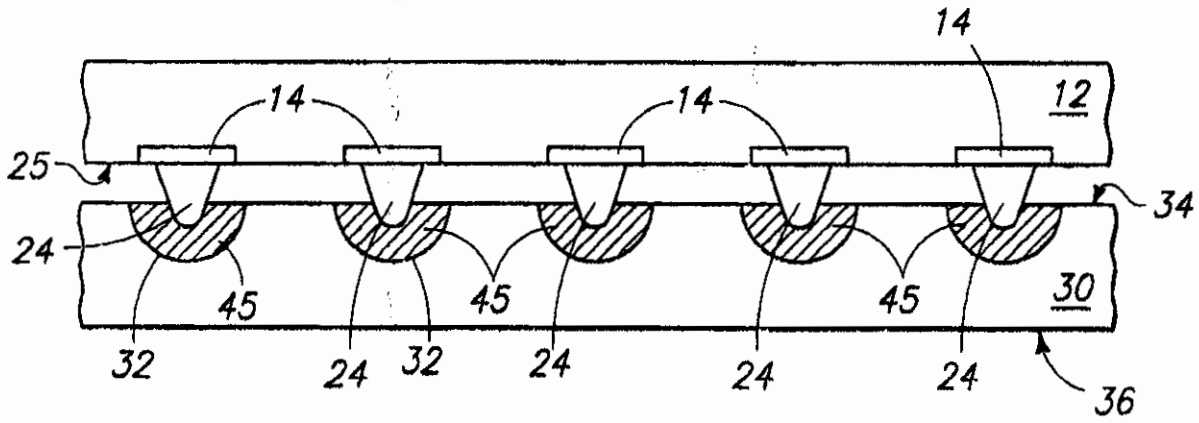
14
12
14
14
25
34
24
45
45
45
30
32
24
32
24
24
24
36

Fig. 12

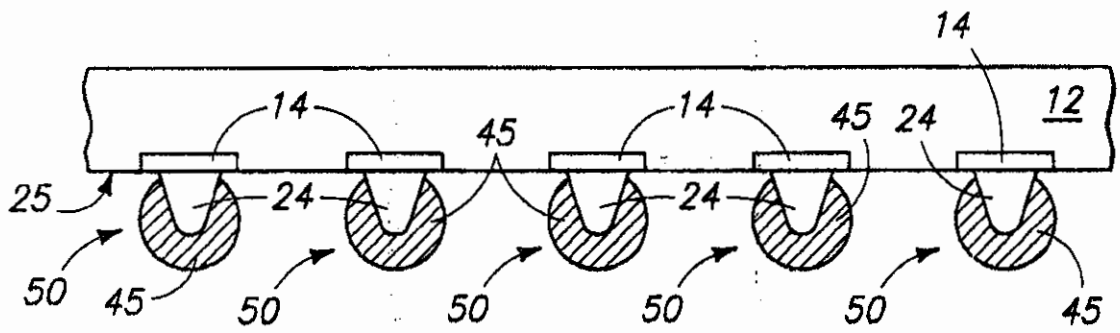
14
14
14
45
45
24
12
25
24
24
50
45
50
50
50
50
45

Фиг. 9

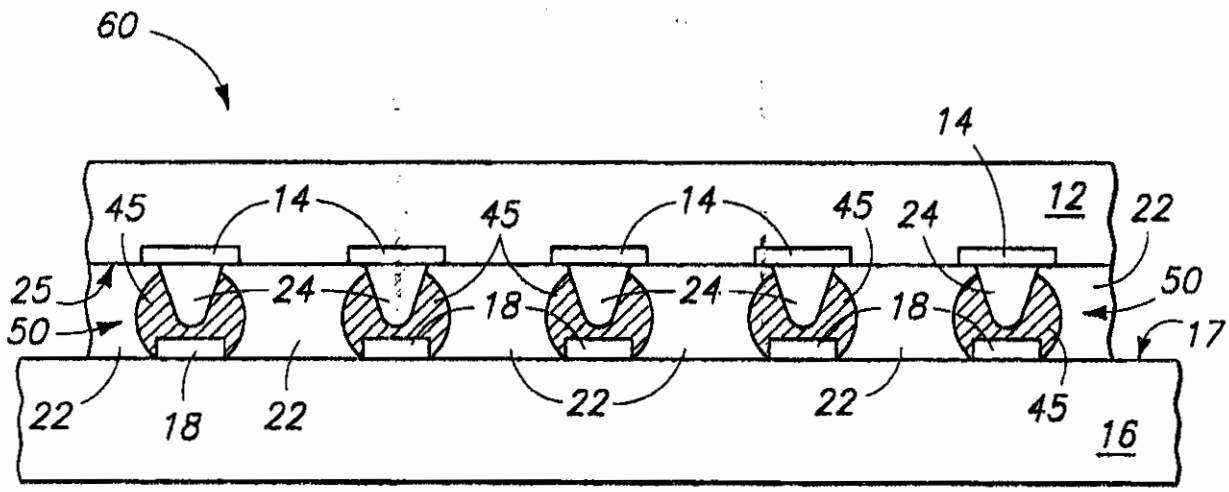
60
14
45
14
45
14
45
24
12
22
25
24
18
24
18
50
50
17
22
18
22
22
22
45
16

Фиг. 10

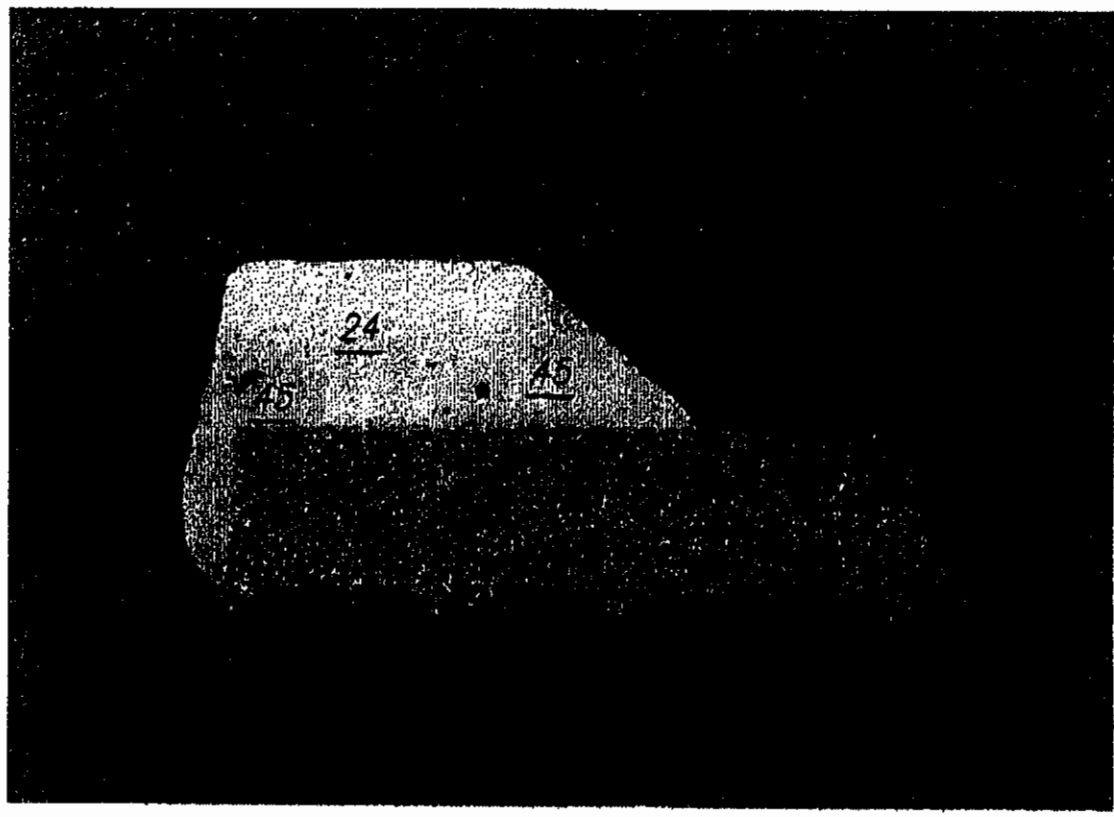

Fig 11

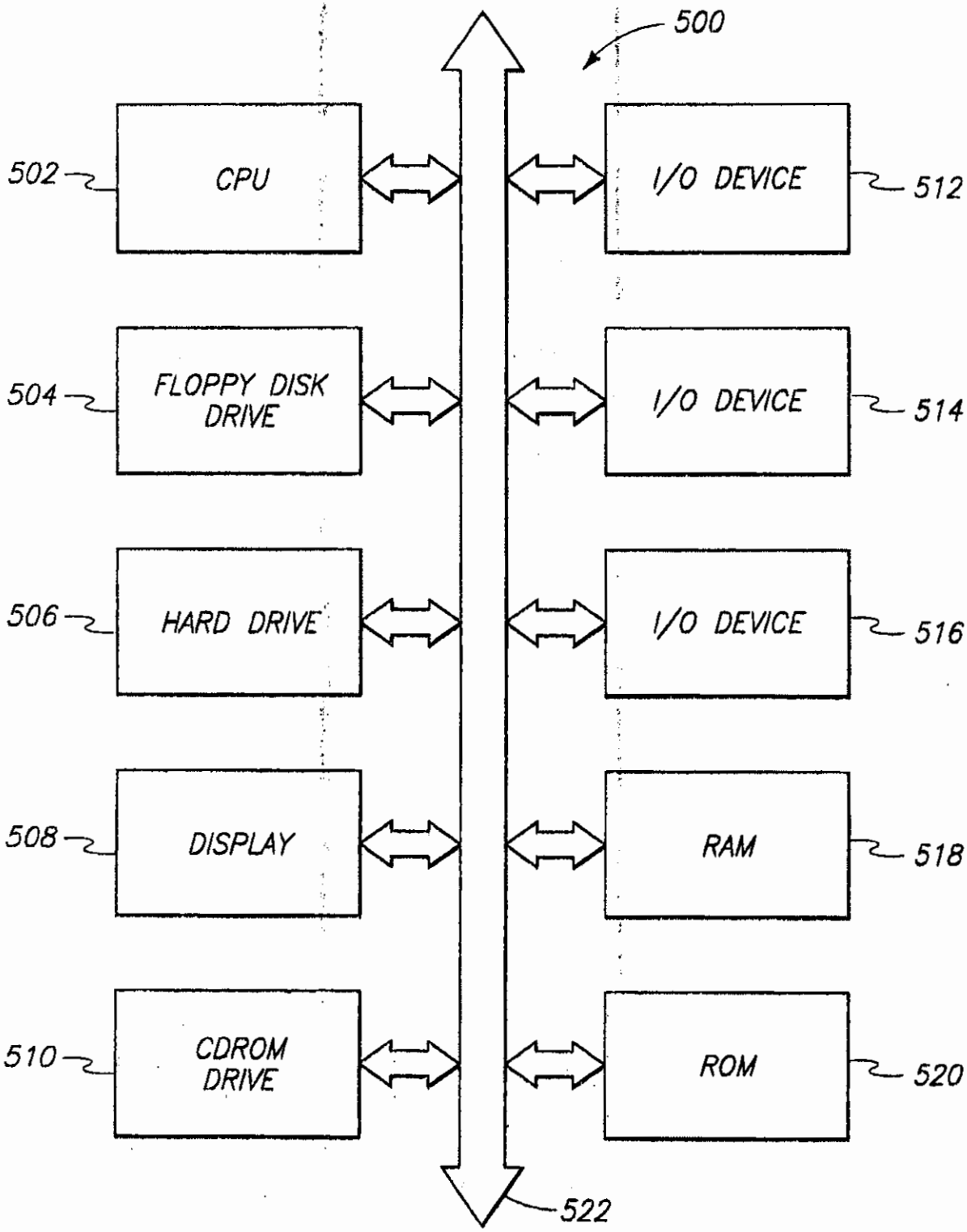
500
502
CPU
I/O DEVICE
512
504
FLOPPY DISK DRIVE
I/O DEVICE
514
506
HARD DRIVE
I/O DEVICE
516
508
DISPLAY
RAM
518
510
CDROM DRIVE
ROM
520
522

Fig 12