[Figures]

[Figure 1]

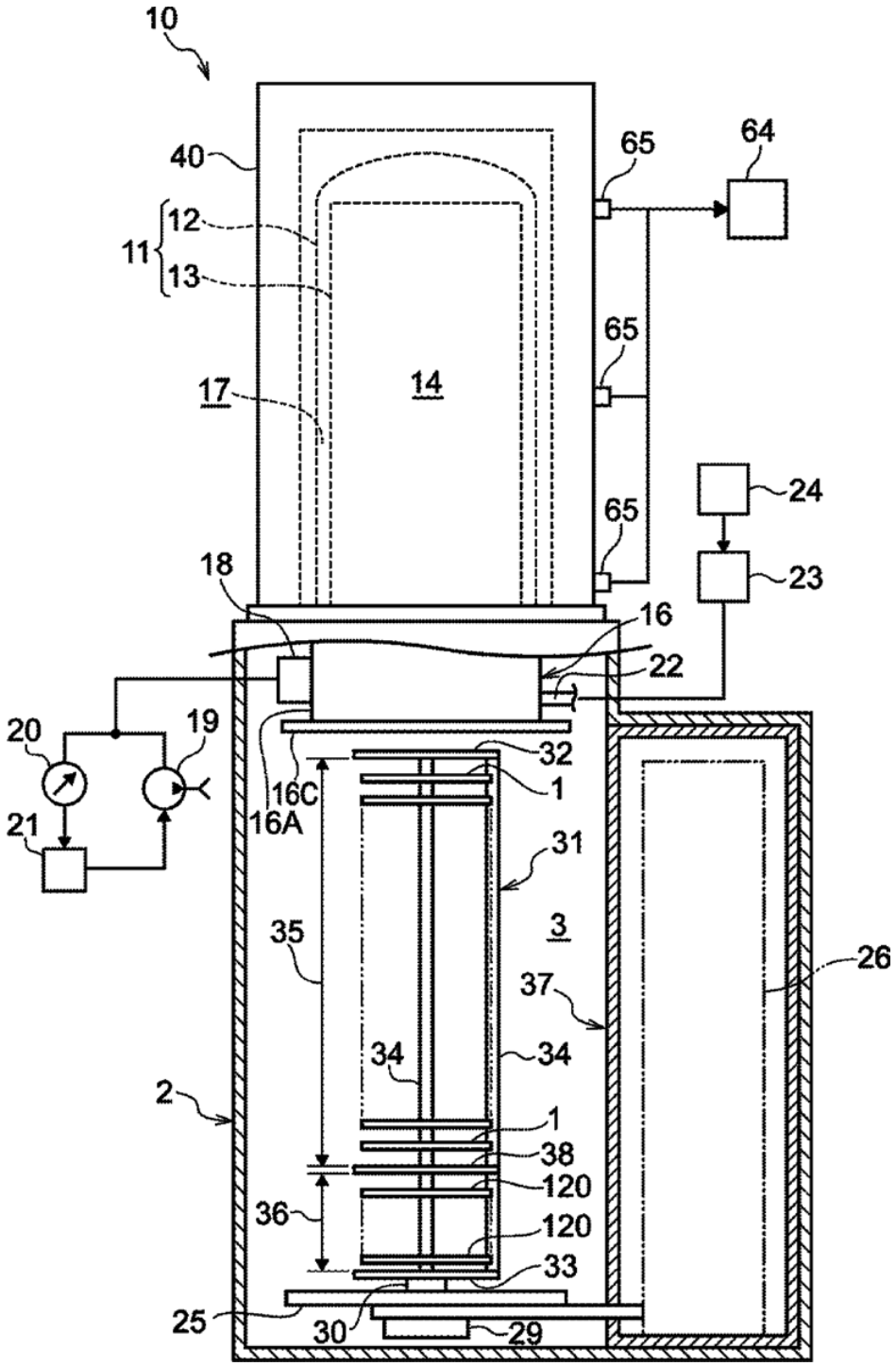

[Figure 2]

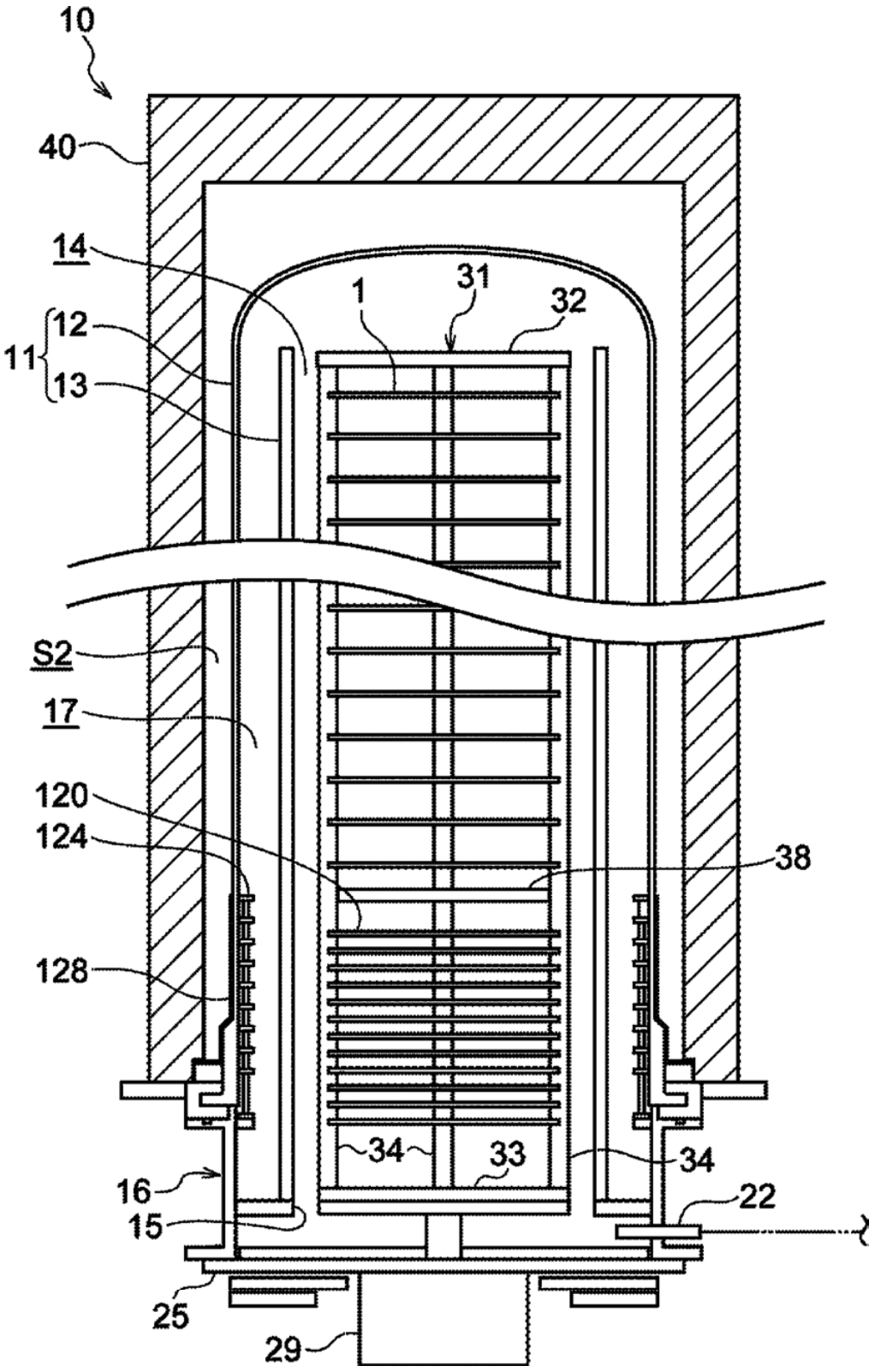

[Figure 3A]

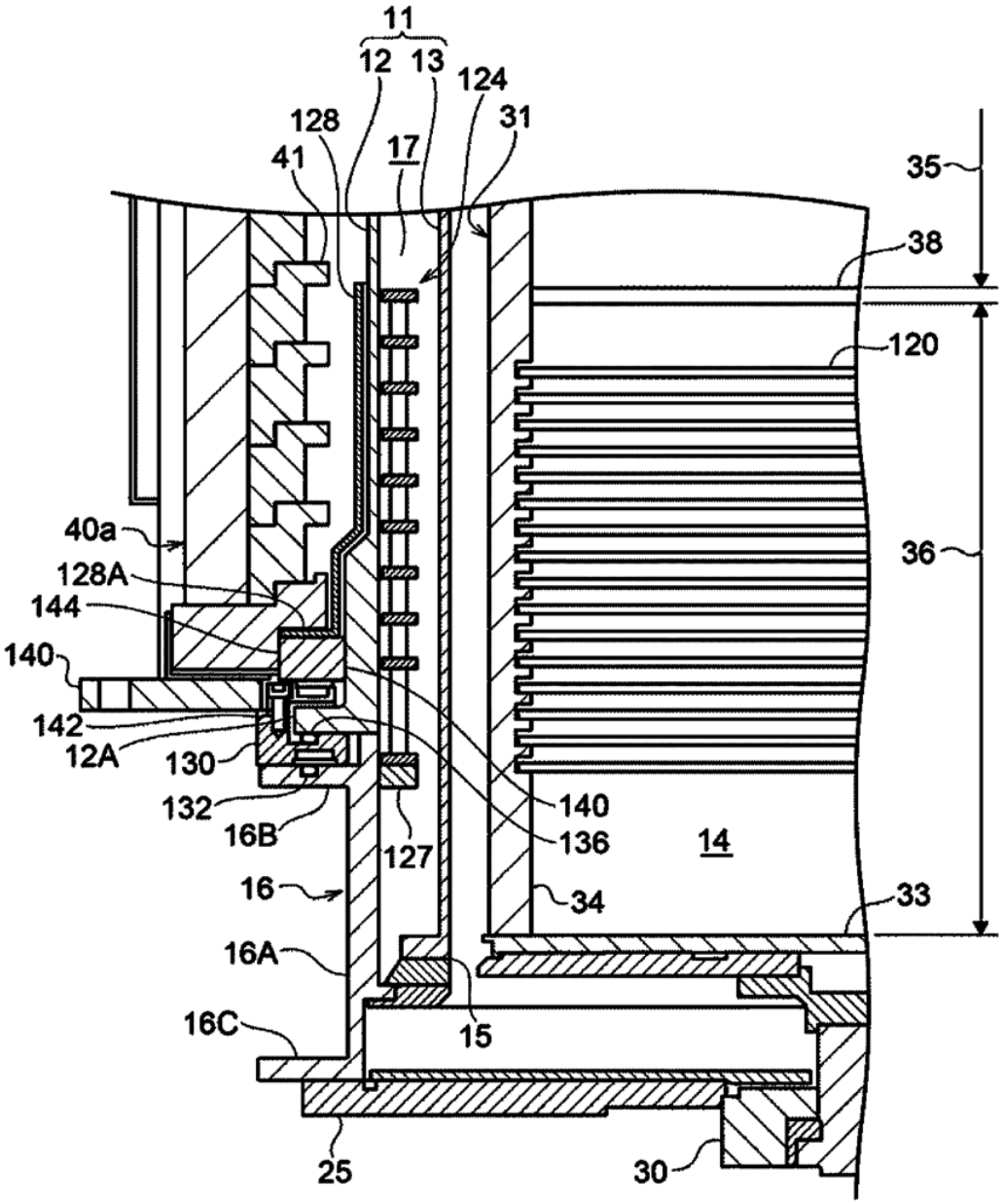

[Figure 3B]

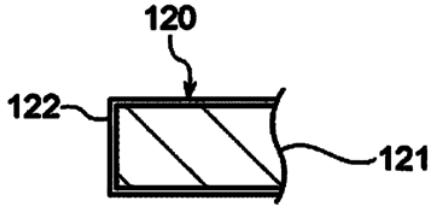

[Figure 4A]

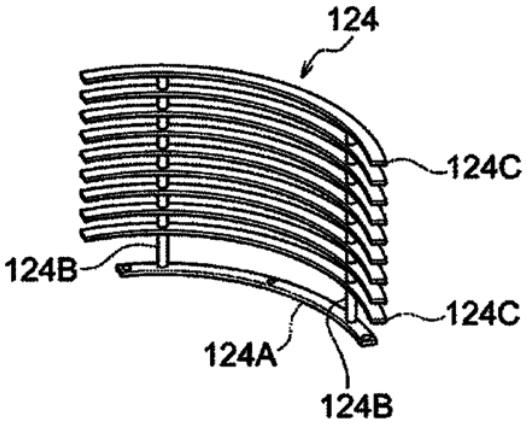

[Figure 4B]

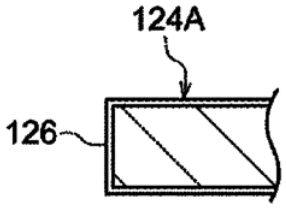

[Figure 5]

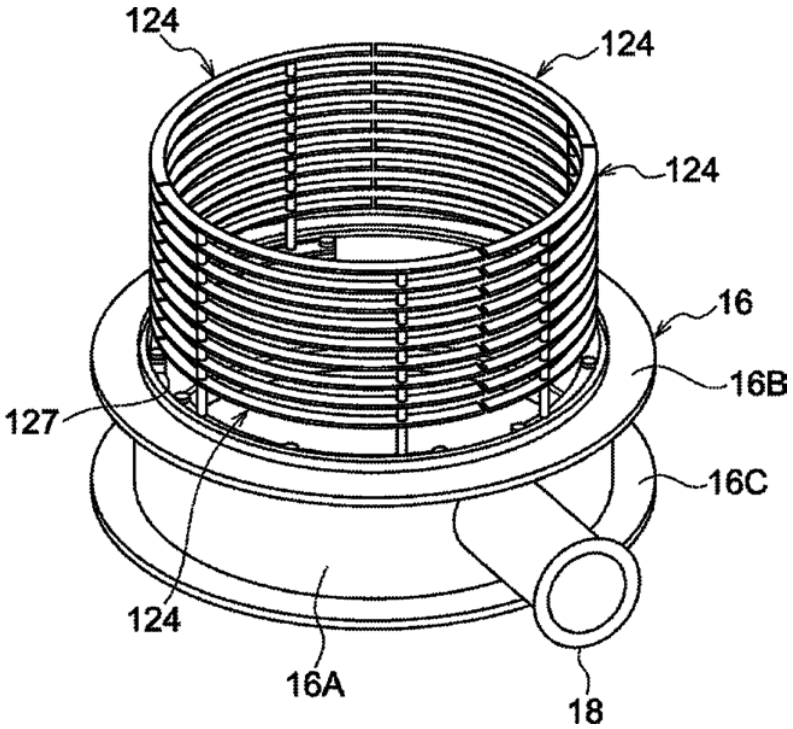

[Figure 6]

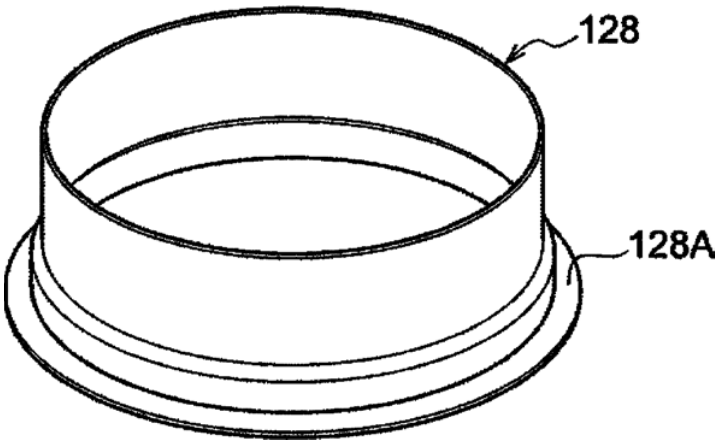

[Figure 7]

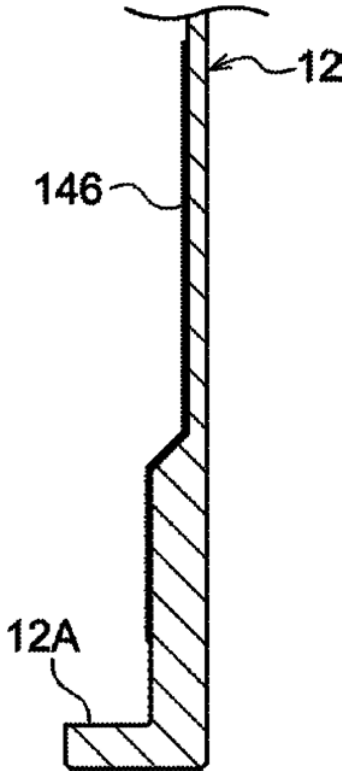

[Figure 8]

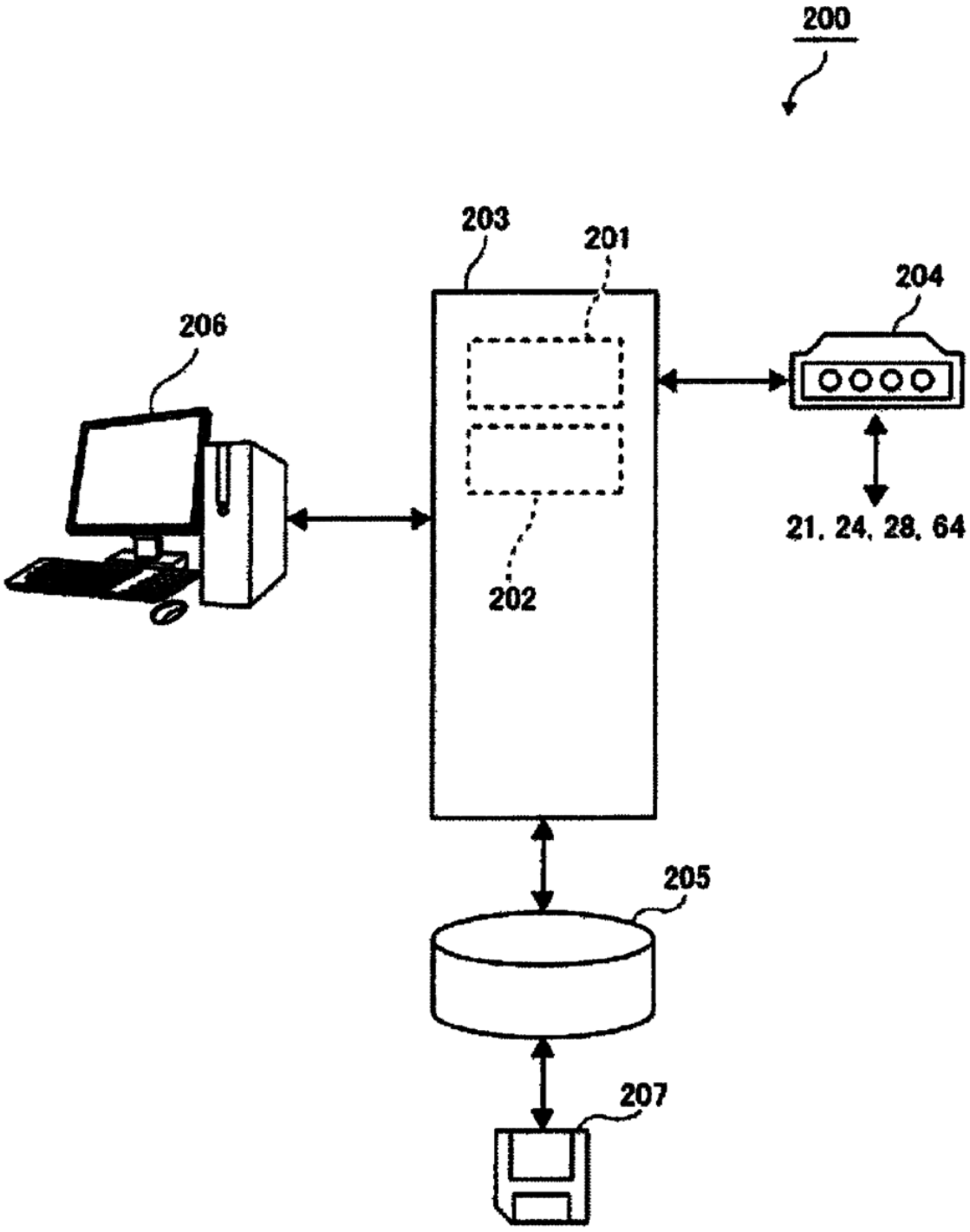

[Figure 9]

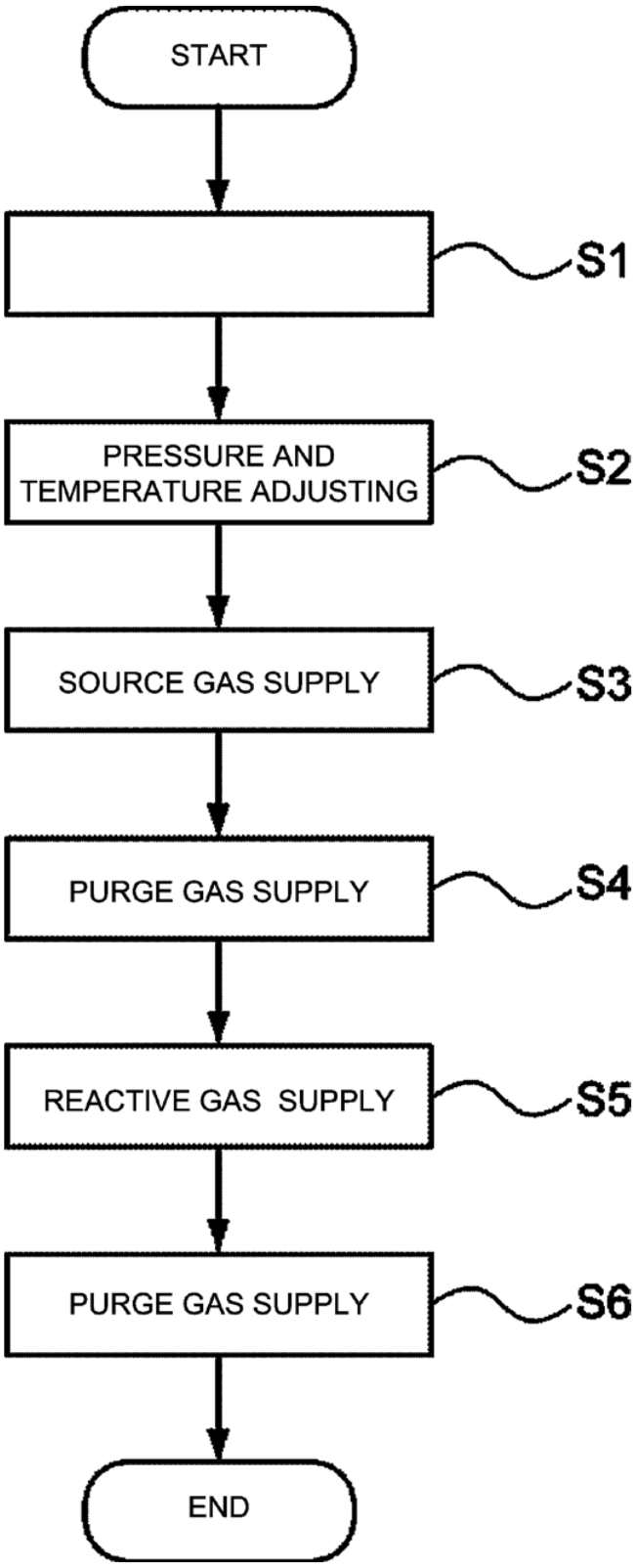
START
S1
PRESSURE AND TEMPERATURE ADJUSTING
S2
SOURCE GAS SUPPLY
S3
PURGE GAS SUPPLY
S4
REACTIVE GAS SUPPLY
S5
PURGE GAS SUPPLY
S6
END

[Figure 10]

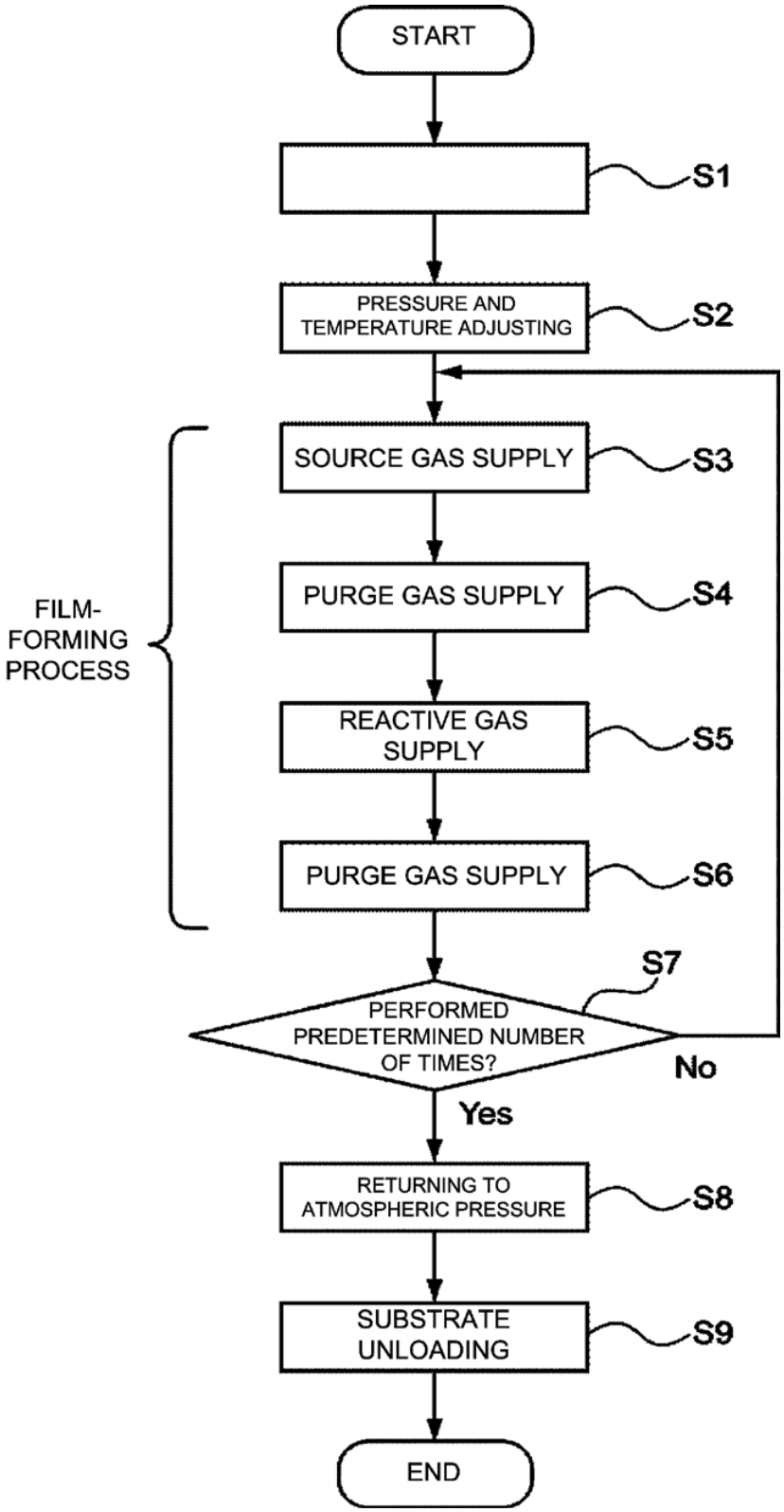
START
S1
PRESSURE AND TEMPERATURE ADJUSTING
S2
SOURCE GAS SUPPLY
S3
PURGE GAS SUPPLY
S4
REACTIVE GAS SUPPLY
S5
PURGE GAS SUPPLY
S6
FILM-FORMING PROCESS
S7
PERFORMED PREDETERMINED NUMBER OF TIMES?
No
Yes
RETURNING TO ATMOSPHERIC PRESSURE
S8
SUBSTRATE UNLOADING
S9
END