(12) INTERNATIONAL APPLICATION PUBLISHED UNDER THE PATENT COOPERATION TREATY (PCT)

(19) World Intellectual Property Organization
International Bureau

(43) International Publication Date
16 October 2014 (16.10.2014)

WIPO | PCT

(10) International Publication Number
WO 2014/168843 A1

(51) International Patent Classification:
*B63B 35/44* (2006.01)

(21) International Application Number:
PCT/US2014/033072

(22) International Filing Date:
4 April 2014 (04.04.2014)

(25) Filing Language: English

(26) Publication Language: English

(30) Priority Data:
61/811,295 12 April 2013 (12.04.2013) US
61/811,713 13 April 2013 (13.04.2013) US

(71) Applicant: **EXCELERATE LIQUEFACTION SOLUTIONS, LLC** [US/US]; 1450 Lake Robbins Drive Suite 200, The Woodlands, TX 77380 (US).

(72) Inventors: **SCOTT, Edward**; 30711 Victoria Estates Drive, Spring, TX 77386 (US). **NORTON, Thomas, M.**; P.O.box 5026, Everglades City, FL 34139 (US). **WATZAK, Michael, Anthony**; 28011 Walnut Creek Ct., Magnolia, TX 77355 (US). **MCGEACHIE, Kenneth, Hugh**; 2611 Spring Bend Drive, Spring, TX 77386 (US). **OLSEN, Robert, Tylor**; 21603 Park Bend Drive, Katy, TX 77450 (US). **HRUSKA, Martin, A.**; 157 Shadowpoint Circle, The Woodlands, TX 77381 (US).

(74) Agent: **CHIU, Penina, Michlin**; Frederic Dorwart, Lawyers, Old City Hall, 124 East Fourth Street, Tulsa, OK 74103 (US).

(81) Designated States *(unless otherwise indicated, for every kind of national protection available)*: AE, AG, AL, AM, AO, AT, AU, AZ, BA, BB, BG, BH, BN, BR, BW, BY, BZ, CA, CH, CL, CN, CO, CR, CU, CZ, DE, DK, DM, DO, DZ, EC, EE, EG, ES, FI, GB, GD, GE, GH, GM, GT, HN, HR, HU, ID, IL, IN, IR, IS, JP, KE, KG, KN, KP, KR, KZ, LA, LC, LK, LR, LS, LT, LU, LY, MA, MD, ME, MG, MK, MN, MW, MX, MY, MZ, NA, NG, NI, NO, NZ, OM, PA, PE, PG, PH, PL, PT, QA, RO, RS, RU, RW, SA, SC, SD, SE, SG, SK, SL, SM, ST, SV, SY, TH, TJ, TM, TN, TR, TT, TZ, UA, UG, US, UZ, VC, VN, ZA, ZM, ZW.

(84) Designated States *(unless otherwise indicated, for every kind of regional protection available)*: ARIPO (BW, GH, GM, KE, LR, LS, MW, MZ, NA, RW, SD, SL, SZ, TZ, UG, ZM, ZW), Eurasian (AM, AZ, BY, KG, KZ, RU, TJ, TM), European (AL, AT, BE, BG, CH, CY, CZ, DE, DK, EE, ES, FI, FR, GB, GR, HR, HU, IE, IS, IT, LT, LU, LV, MC, MK, MT, NL, NO, PL, PT, RO, RS, SE, SI, SK, SM, TR), OAPI (BF, BJ, CF, CG, CI, CM, GA, GN, GQ, GW, KM, ML, MR, NE, SN, TD, TG).

**Declarations under Rule 4.17**:

— *as to applicant's entitlement to apply for and be granted a patent (Rule 4.17(ii))*

— *of inventorship (Rule 4.17(iv))*

**Published**:

— *with international search report (Art. 21(3))*

*[Continued on next page]*

(54) Title: SYSTEMS AND METHODS FOR FLOATING DOCKSIDE LIQUEFACTION OF NATURAL GAS

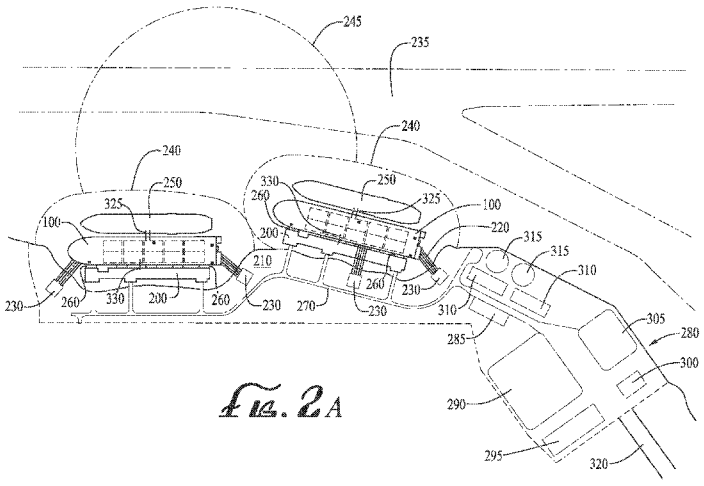


FIG. 2A

(57) Abstract: System and methods for floating dockside liquefaction of natural gas are described. A system for floating dockside liquefaction of natural gas comprises a natural gas pretreatment facility located onshore proximate a dock, wherein the natural gas pretreatment facility is configured to process pipeline quality gas into pretreated natural gas, a floating liquefaction unit moored at the dock, wherein the floating liquefaction unit further comprises a natural gas liquefaction module on a deck, and an LNG storage tank for storing produced LNG below the deck, a pipeline coupling the onshore pretreatment facility to the dock, wherein the pipeline is configured to transport pretreated natural gas onto the dock, and a high pressure gas arm fluidly coupling the pipeline to the floating liquefaction unit, wherein the gas arm is configured to transfer pretreated natural gas to the floating liquefaction unit.

WO 2014/168843 A1

— *before the expiration of the time limit for amending the claims and to be republished in the event of receipt of amendments (Rule 48.2(h))*