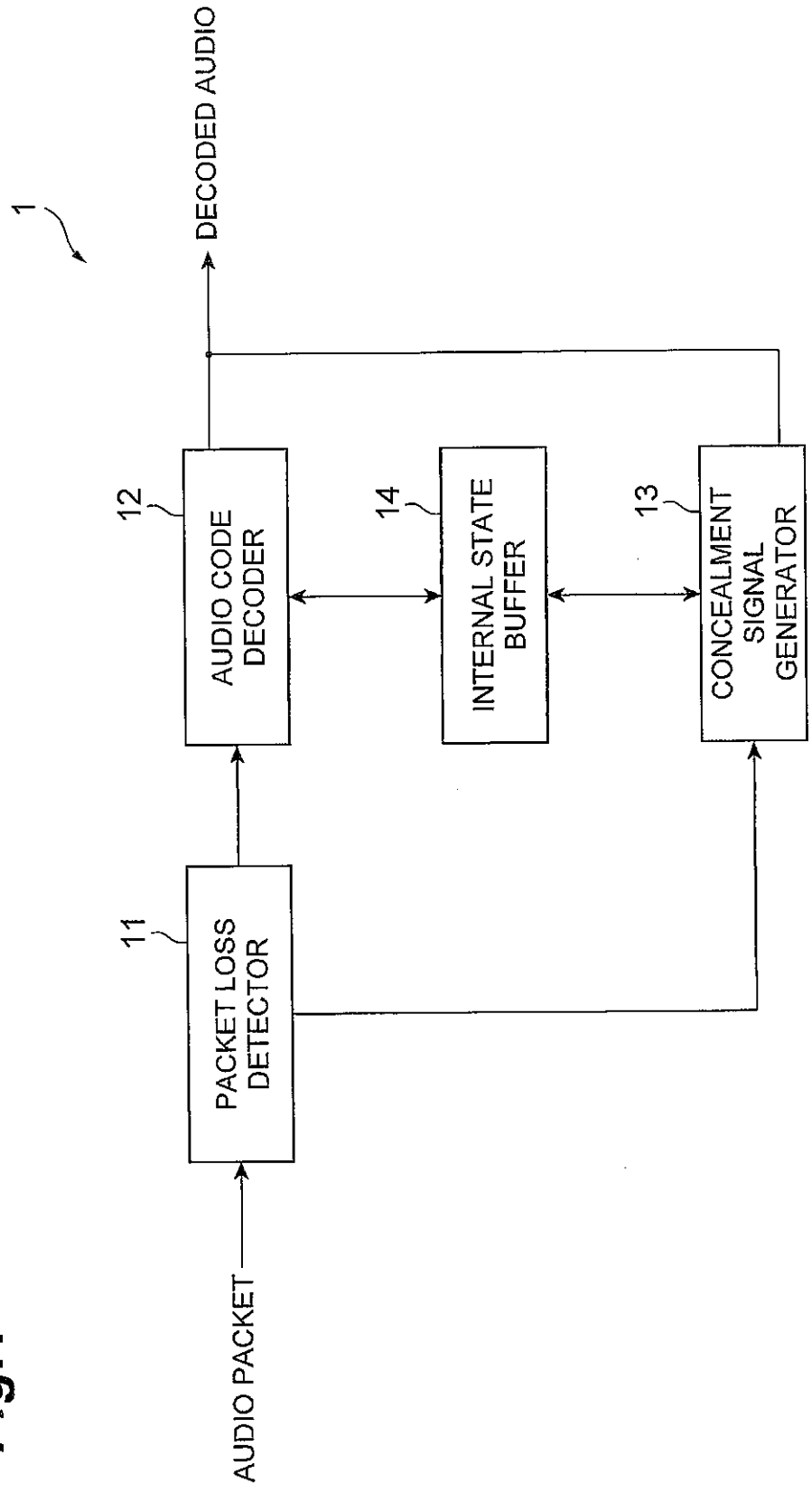
1
DECODED AUDIO
12
AUDIO CODE DECODER
14
INTERNAL STATE BUFFER
13
CONCEALMENT SIGNAL GENERATOR
11
PACKET LOSS DETECTOR
AUDIO PACKET

Fig.1

Fig.2

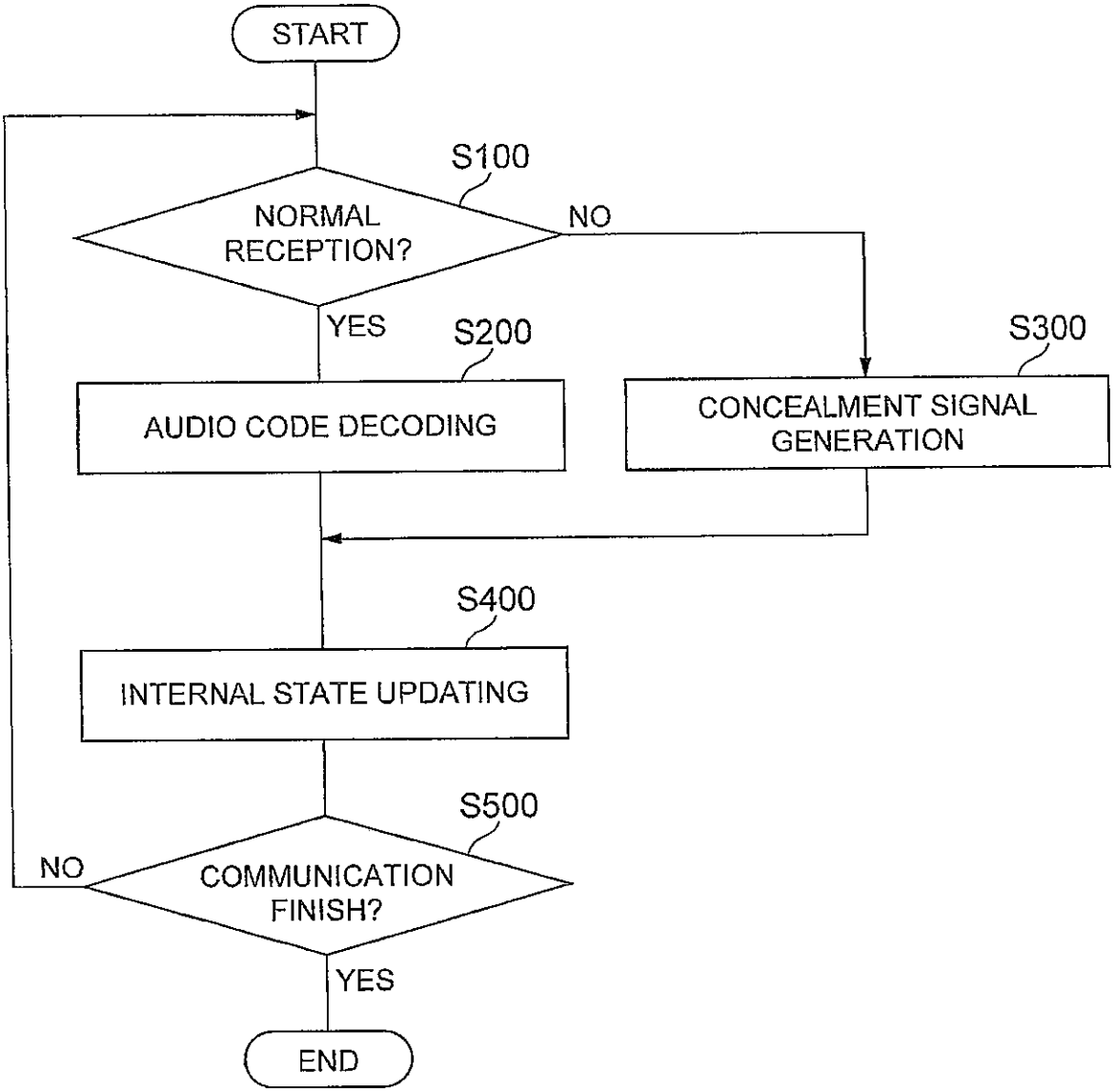
START
S100
NORMAL RECEPTION?
NO
YES
S200
AUDIO CODE DECODING
S300
CONCEALMENT SIGNAL GENERATION
S400
INTERNAL STATE UPDATING
S500
NO
COMMUNICATION FINISH?
YES
END

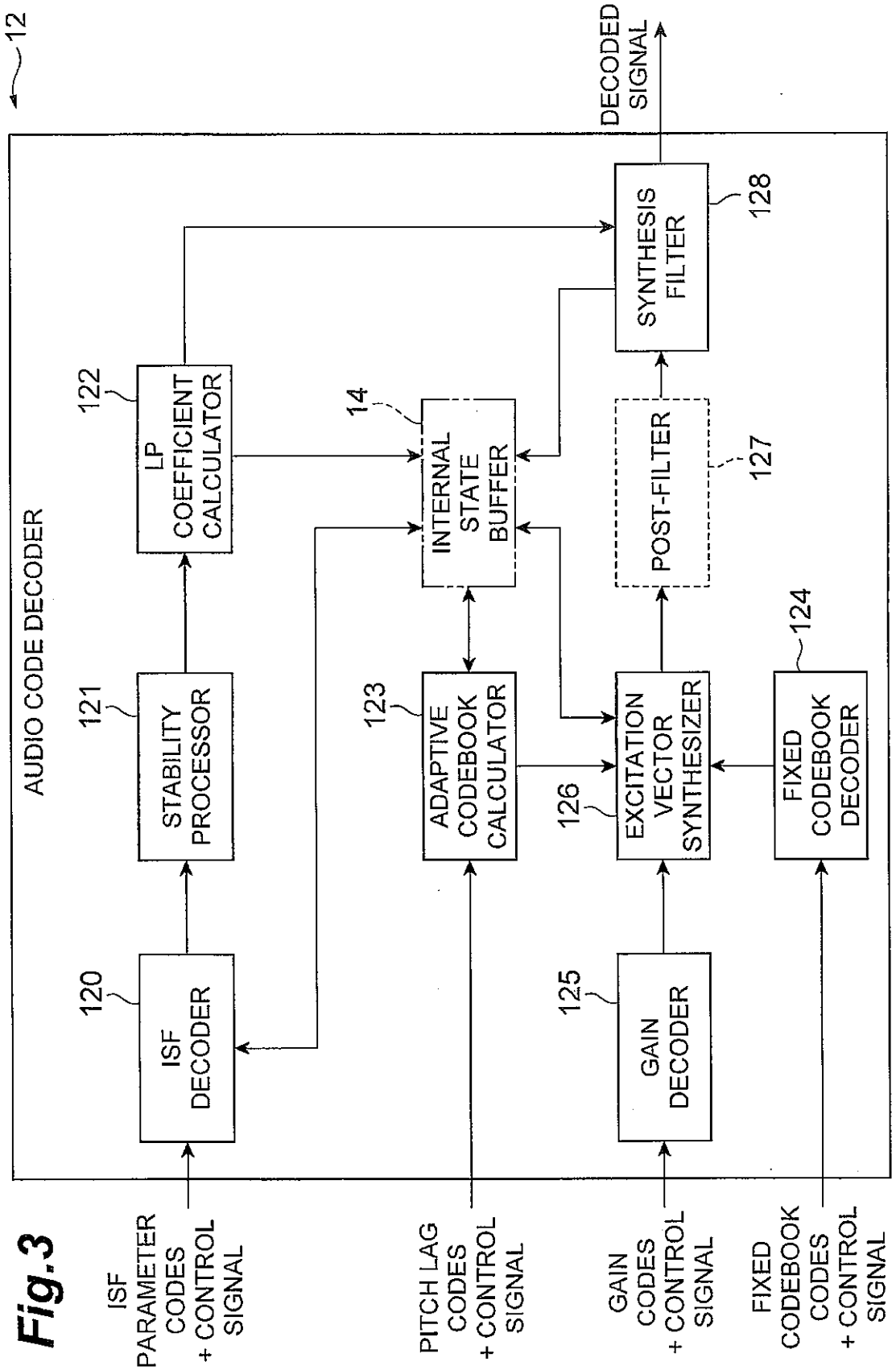
12
AUDIO CODE DECODER
DECODED SIGNAL
SYNTHESIS FILTER
128
LP COEFFICIENT CALCULATOR
122
INTERNAL STATE BUFFER
14
POST-FILTER
127
STABILITY PROCESSOR
121
ADAPTIVE CODEBOOK CALCULATOR
123
EXCITATION VECTOR SYNTHESIZER
126
FIXED CODEBOOK DECODER
124
ISF DECODER
120
GAIN DECODER
125
ISF PARAMETER CODES + CONTROL SIGNAL
PITCH LAG CODES + CONTROL SIGNAL
GAIN CODES + CONTROL SIGNAL
FIXED CODEBOOK CODES + CONTROL SIGNAL

Fig.3

Fig.4

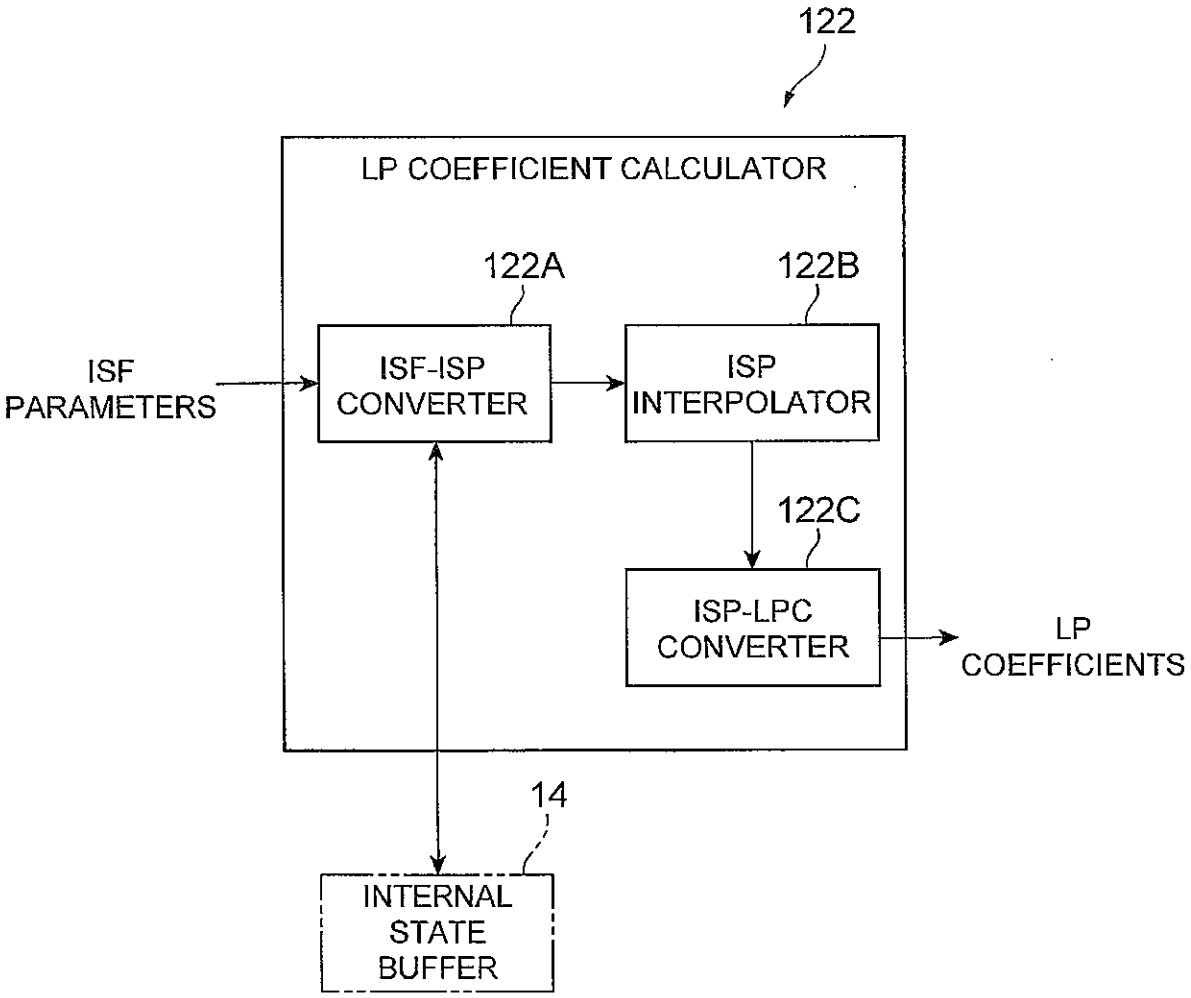
122
LP COEFFICIENT CALCULATOR
122A
122B
ISF
PARAMETERS
ISF-ISP
CONVERTER
ISP
INTERPOLATOR
122C
ISP-LPC
CONVERTER
LP
COEFFICIENTS
14
INTERNAL
STATE
BUFFER

Fig.5

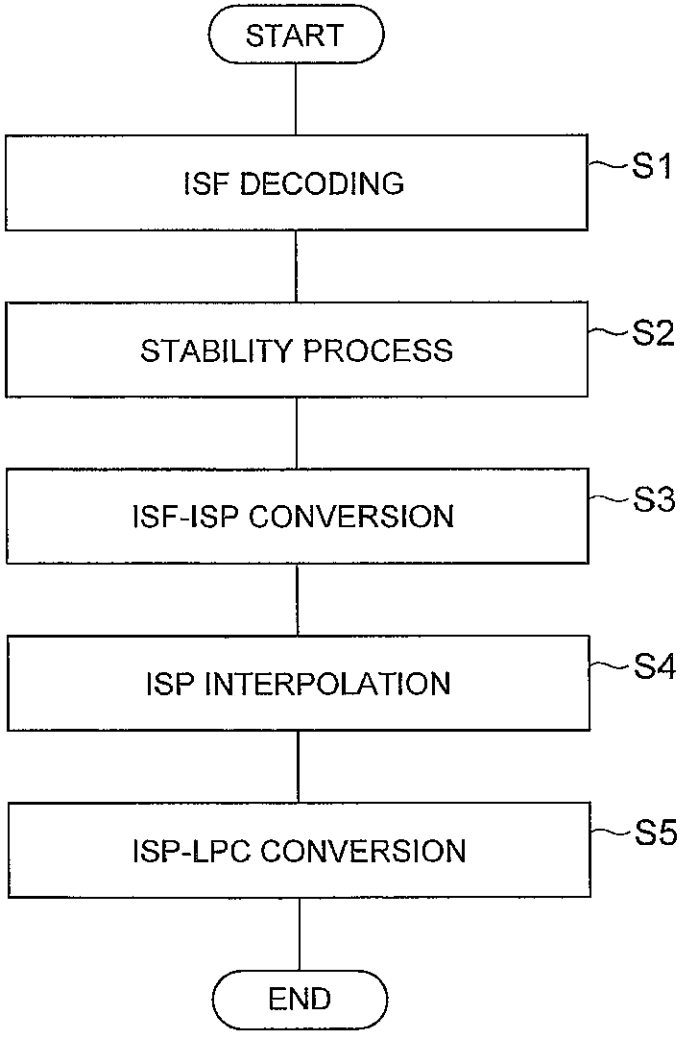
START
ISF DECODING
S1
STABILITY PROCESS
S2
ISF-ISP CONVERSION
S3
ISP INTERPOLATION
S4
ISP-LPC CONVERSION
S5
END

Fig.6

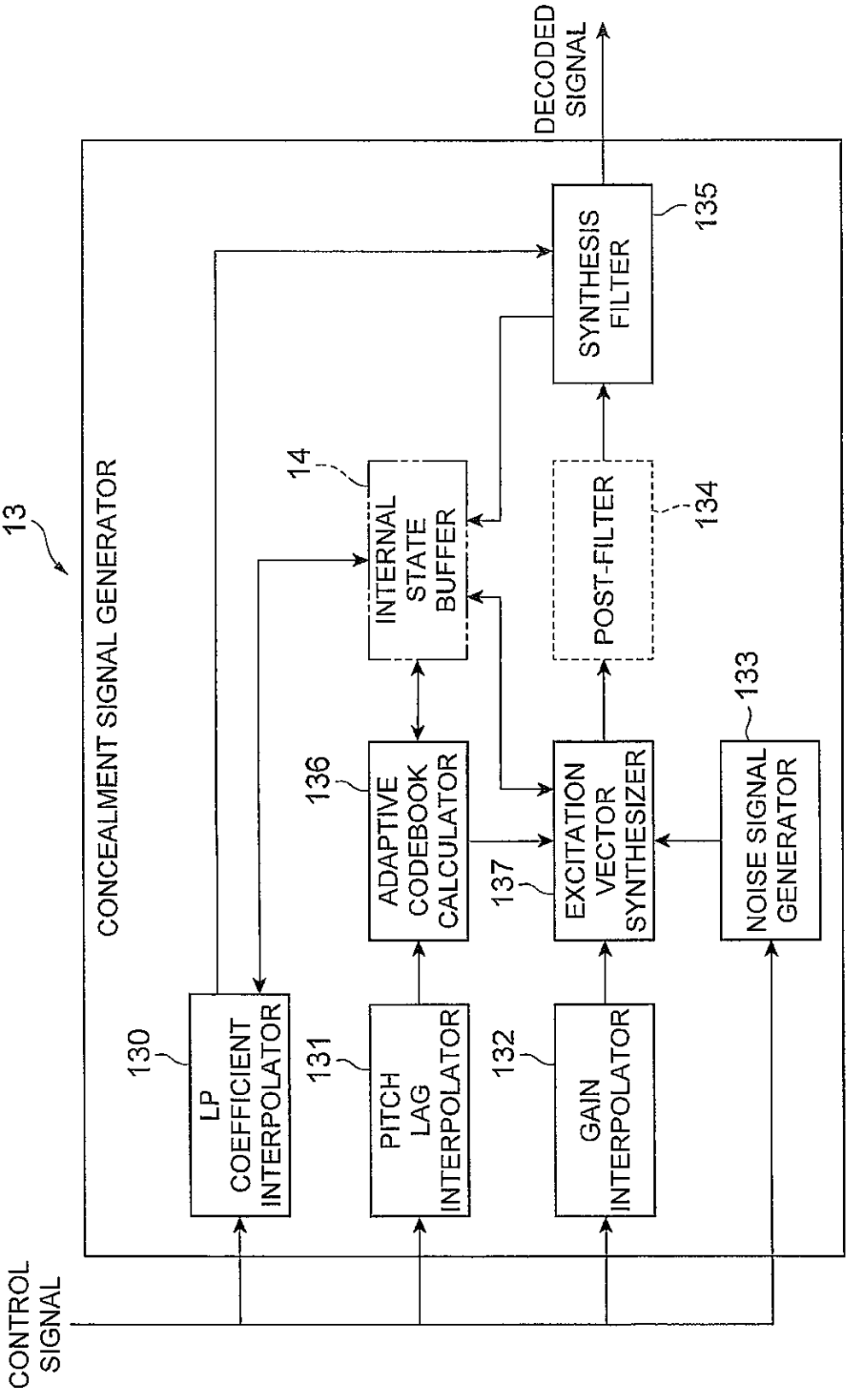
CONTROL SIGNAL
13
CONCEALMENT SIGNAL GENERATOR
DECODED SIGNAL
LP COEFFICIENT INTERPOLATOR
130
PITCH LAG INTERPOLATOR
131
GAIN INTERPOLATOR
132
NOISE SIGNAL GENERATOR
133
POST-FILTER
134
SYNTHESIS FILTER
135
ADAPTIVE CODEBOOK CALCULATOR
136
EXCITATION VECTOR SYNTHESIZER
137
INTERNAL STATE BUFFER
14

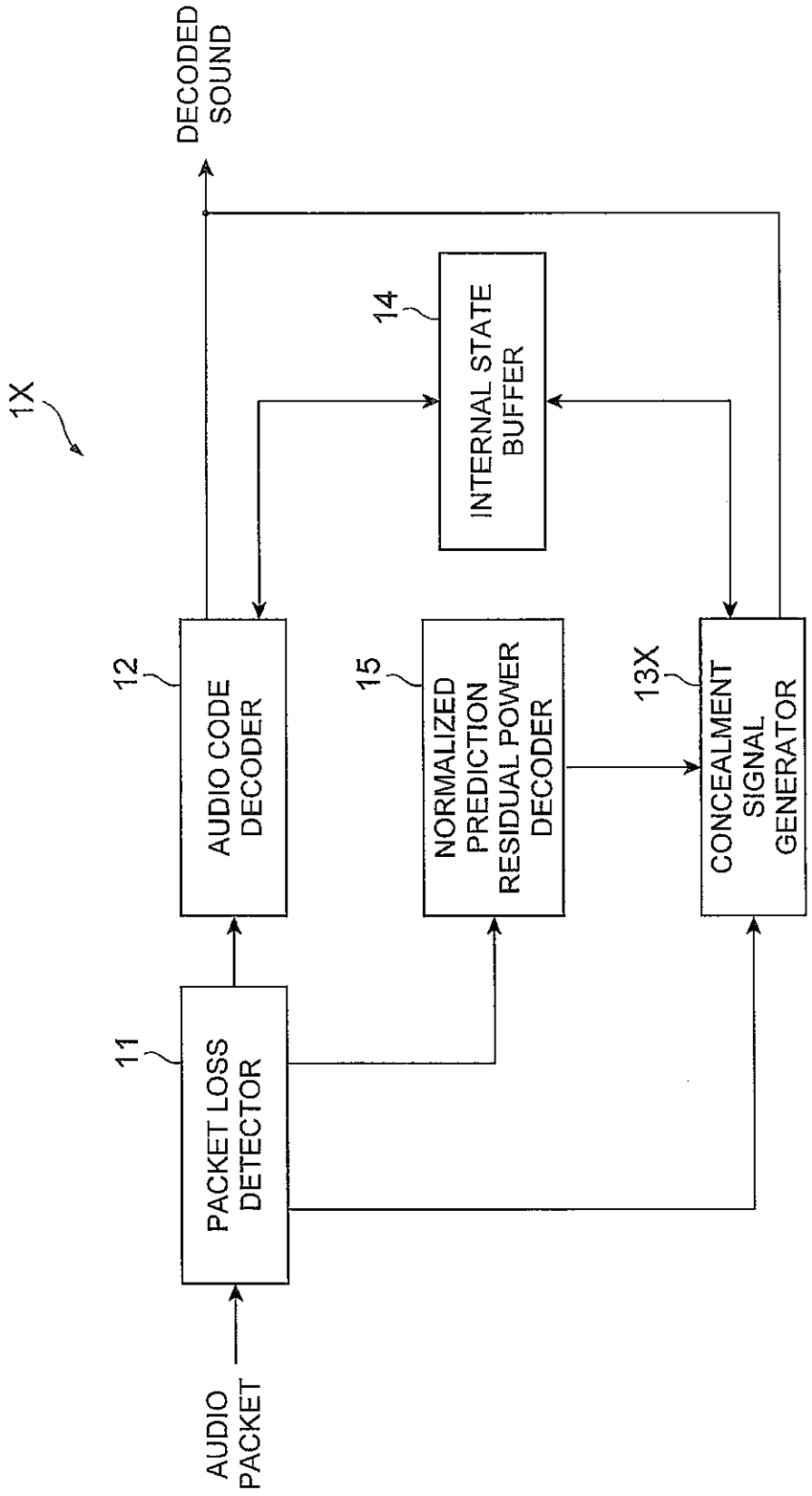
1X
DECODED SOUND
14
INTERNAL STATE BUFFER
12
AUDIO CODE DECODER
15
NORMALIZED PREDICTION RESIDUAL POWER DECODER
13X
CONCEALMENT SIGNAL GENERATOR
11
PACKET LOSS DETECTOR
AUDIO PACKET

Fig.7

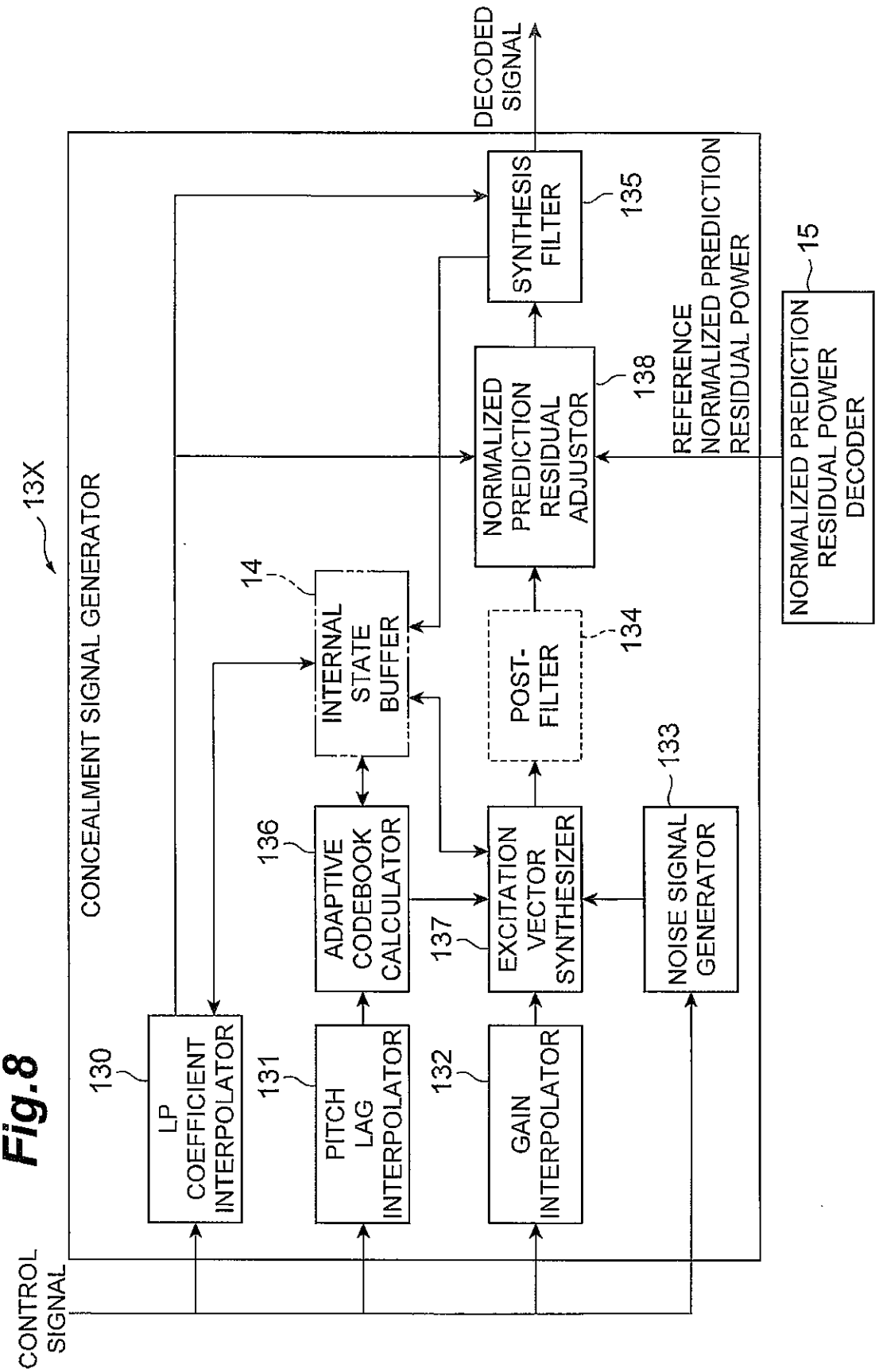
13X
CONCEALMENT SIGNAL GENERATOR
CONTROL SIGNAL
DECODED SIGNAL
LP COEFFICIENT INTERPOLATOR
130
PITCH LAG INTERPOLATOR
131
GAIN INTERPOLATOR
132
ADAPTIVE CODEBOOK CALCULATOR
136
INTERNAL STATE BUFFER
14
EXCITATION VECTOR SYNTHESIZER
137
NOISE SIGNAL GENERATOR
133
POST-FILTER
134
NORMALIZED PREDICTION RESIDUAL ADJUSTOR
138
SYNTHESIS FILTER
135
REFERENCE NORMALIZED PREDICTION RESIDUAL POWER
NORMALIZED PREDICTION RESIDUAL POWER DECODER
15

Fig.8

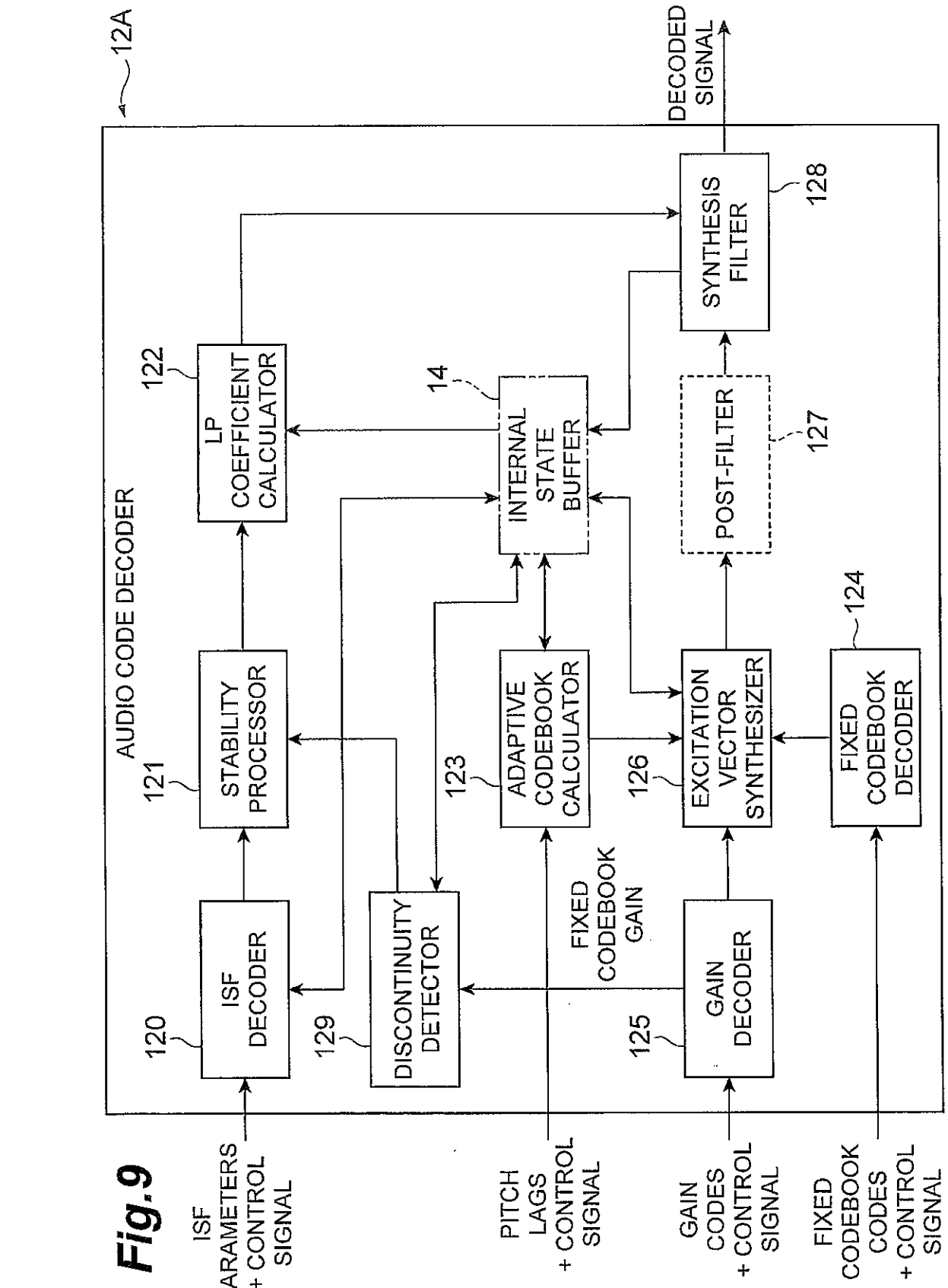
12A
AUDIO CODE DECODER
DECODED SIGNAL
SYNTHESIS FILTER
128
LP COEFFICIENT CALCULATOR
122
INTERNAL STATE BUFFER
14
POST-FILTER
127
STABILITY PROCESSOR
121
ADAPTIVE CODEBOOK CALCULATOR
123
EXCITATION VECTOR SYNTHESIZER
126
FIXED CODEBOOK DECODER
124
ISF DECODER
120
DISCONTINUITY DETECTOR
129
GAIN DECODER
125
FIXED CODEBOOK GAIN
ISF PARAMETERS + CONTROL SIGNAL
PITCH LAGS + CONTROL SIGNAL
GAIN CODES + CONTROL SIGNAL
FIXED CODEBOOK CODES + CONTROL SIGNAL

Fig.9

Fig.10

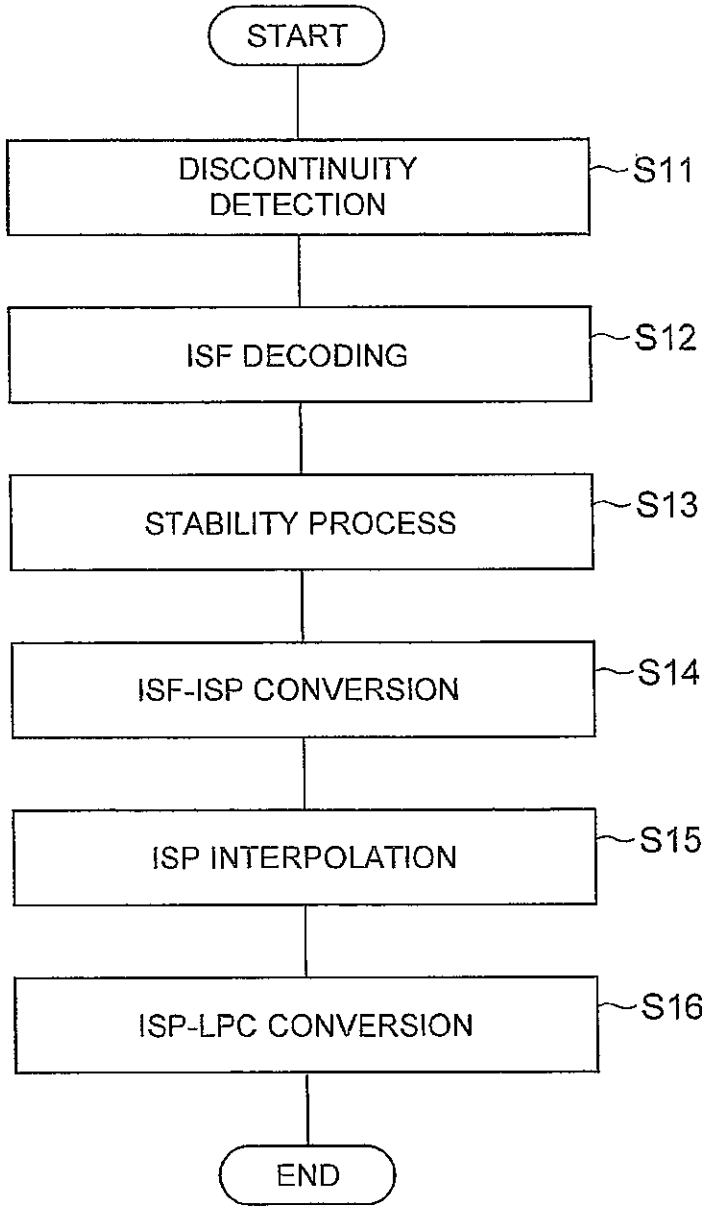
START
DISCONTINUITY DETECTION
S11
ISF DECODING
S12
STABILITY PROCESS
S13
ISF-ISP CONVERSION
S14
ISP INTERPOLATION
S15
ISP-LPC CONVERSION
S16
END

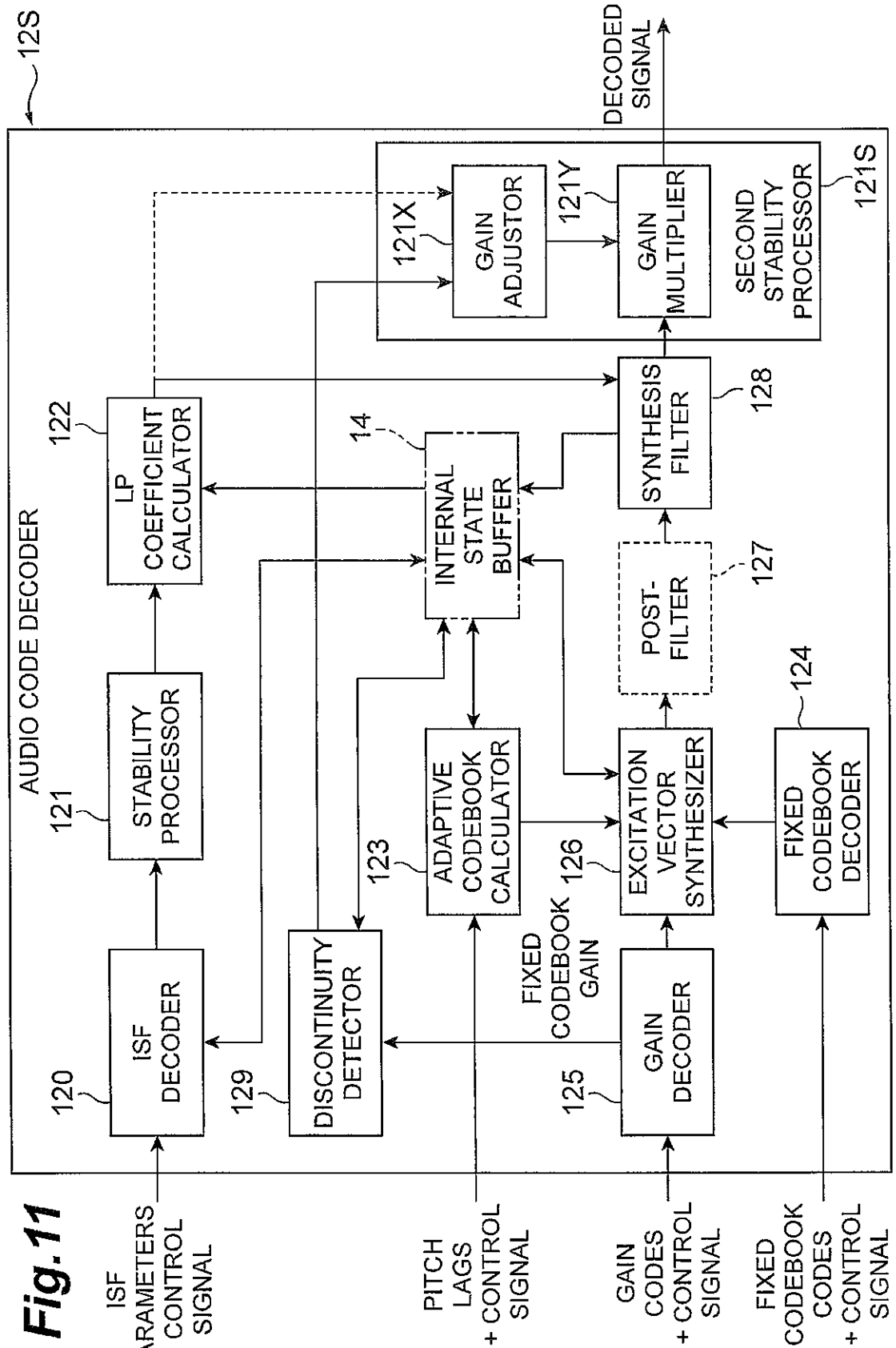
12S
AUDIO CODE DECODER
DECODED SIGNAL
ISF PARAMETERS + CONTROL SIGNAL
PITCH LAGS + CONTROL SIGNAL
GAIN CODES + CONTROL SIGNAL
FIXED CODEBOOK CODES + CONTROL SIGNAL
120
ISF DECODER
121
STABILITY PROCESSOR
122
LP COEFFICIENT CALCULATOR
129
DISCONTINUITY DETECTOR
123
ADAPTIVE CODEBOOK CALCULATOR
14
INTERNAL STATE BUFFER
FIXED CODEBOOK GAIN
125
GAIN DECODER
126
EXCITATION VECTOR SYNTHESIZER
127
POST-FILTER
128
SYNTHESIS FILTER
124
FIXED CODEBOOK DECODER
121X
GAIN ADJUSTOR
121Y
GAIN MULTIPLIER
121S
SECOND STABILITY PROCESSOR

Fig.11

Fig.12

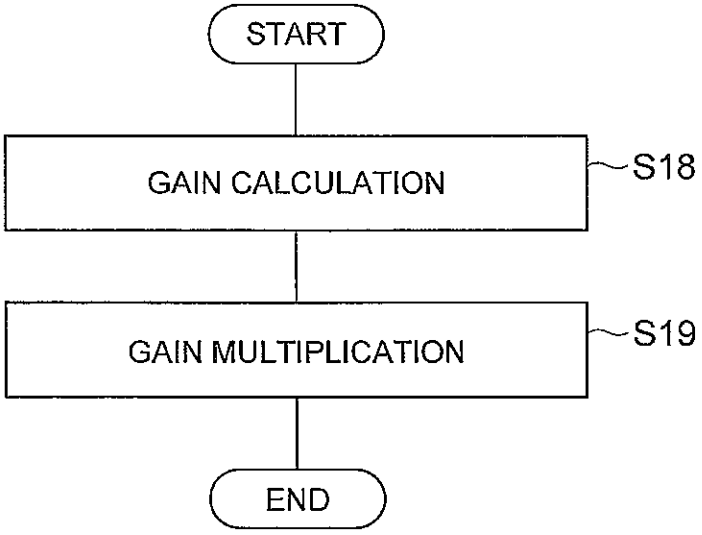

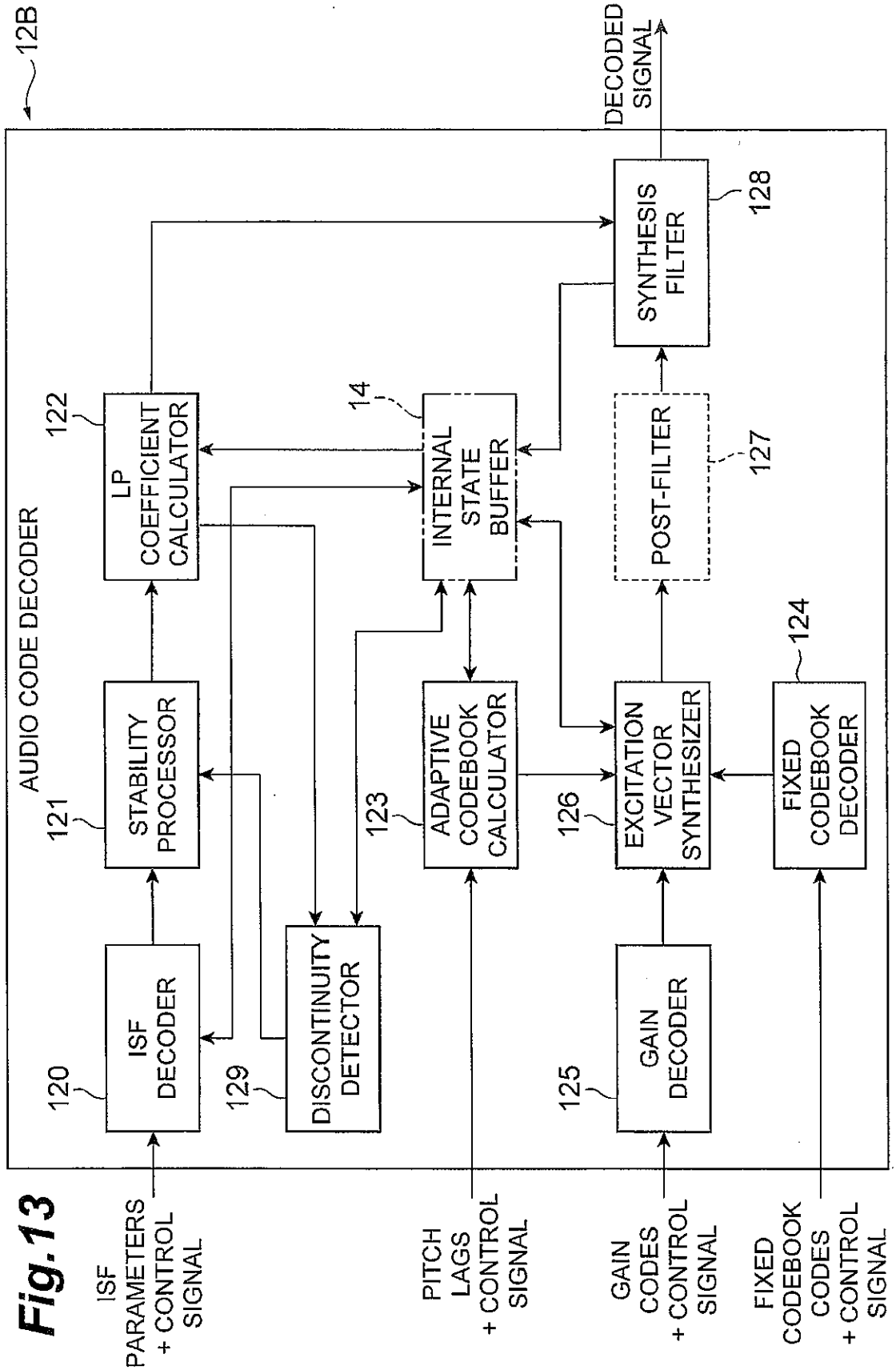
12B
AUDIO CODE DECODER
DECODED SIGNAL
SYNTHESIS FILTER
128
LP COEFFICIENT CALCULATOR
122
INTERNAL STATE BUFFER
14
POST-FILTER
127
STABILITY PROCESSOR
121
ADAPTIVE CODEBOOK CALCULATOR
123
EXCITATION VECTOR SYNTHESIZER
126
FIXED CODEBOOK DECODER
124
ISF DECODER
120
DISCONTINUITY DETECTOR
129
GAIN DECODER
125
ISF PARAMETERS + CONTROL SIGNAL
PITCH LAGS + CONTROL SIGNAL
GAIN CODES + CONTROL SIGNAL
FIXED CODEBOOK CODES + CONTROL SIGNAL

Fig.13

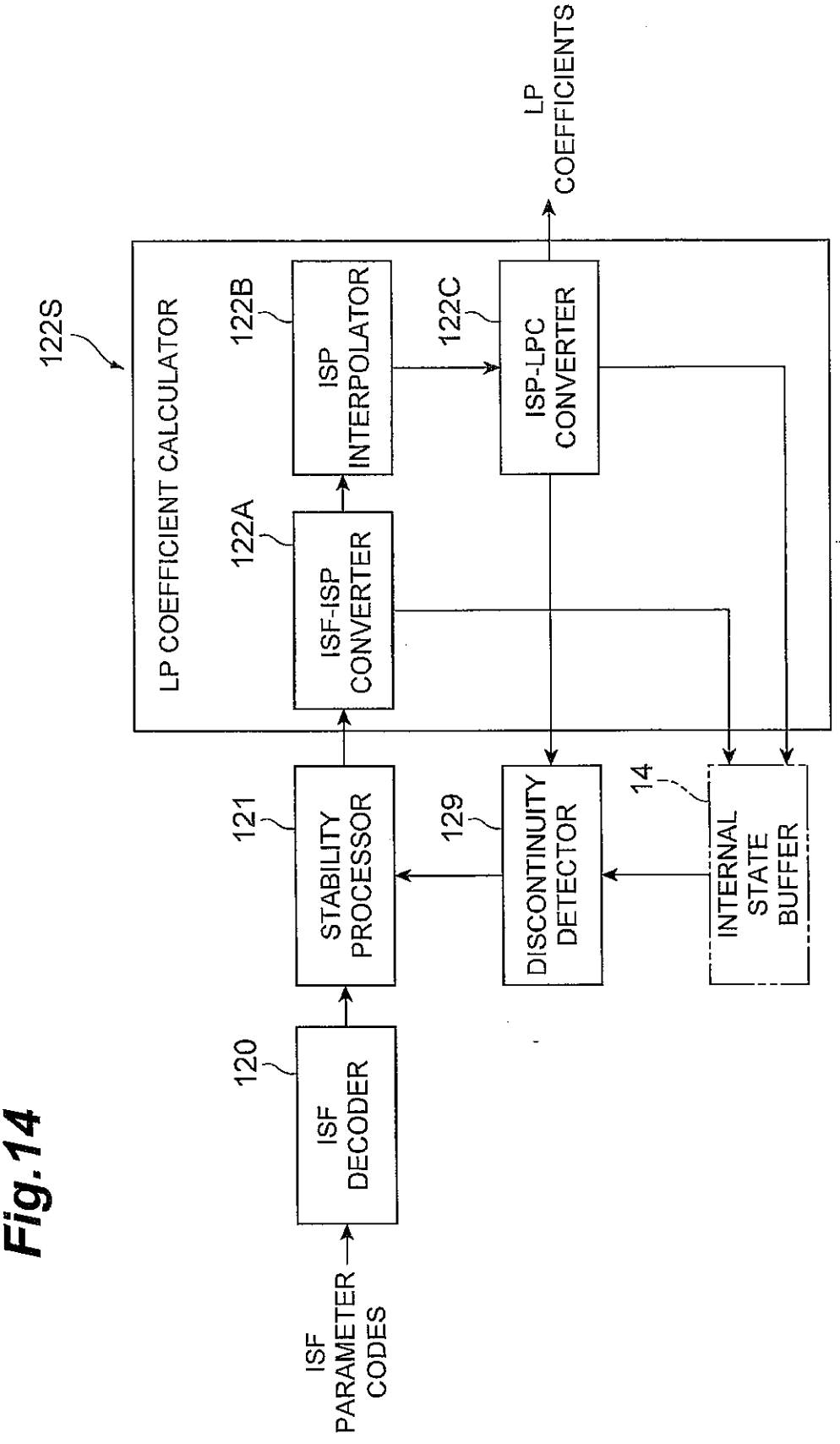
ISF PARAMETER CODES
120
ISF DECODER
121
STABILITY PROCESSOR
129
DISCONTINUITY DETECTOR
14
INTERNAL STATE BUFFER
122S
LP COEFFICIENT CALCULATOR
122A
ISF-ISP CONVERTER
122B
ISP INTERPOLATOR
122C
ISP-LPC CONVERTER
LP COEFFICIENTS

Fig.14

Fig.15

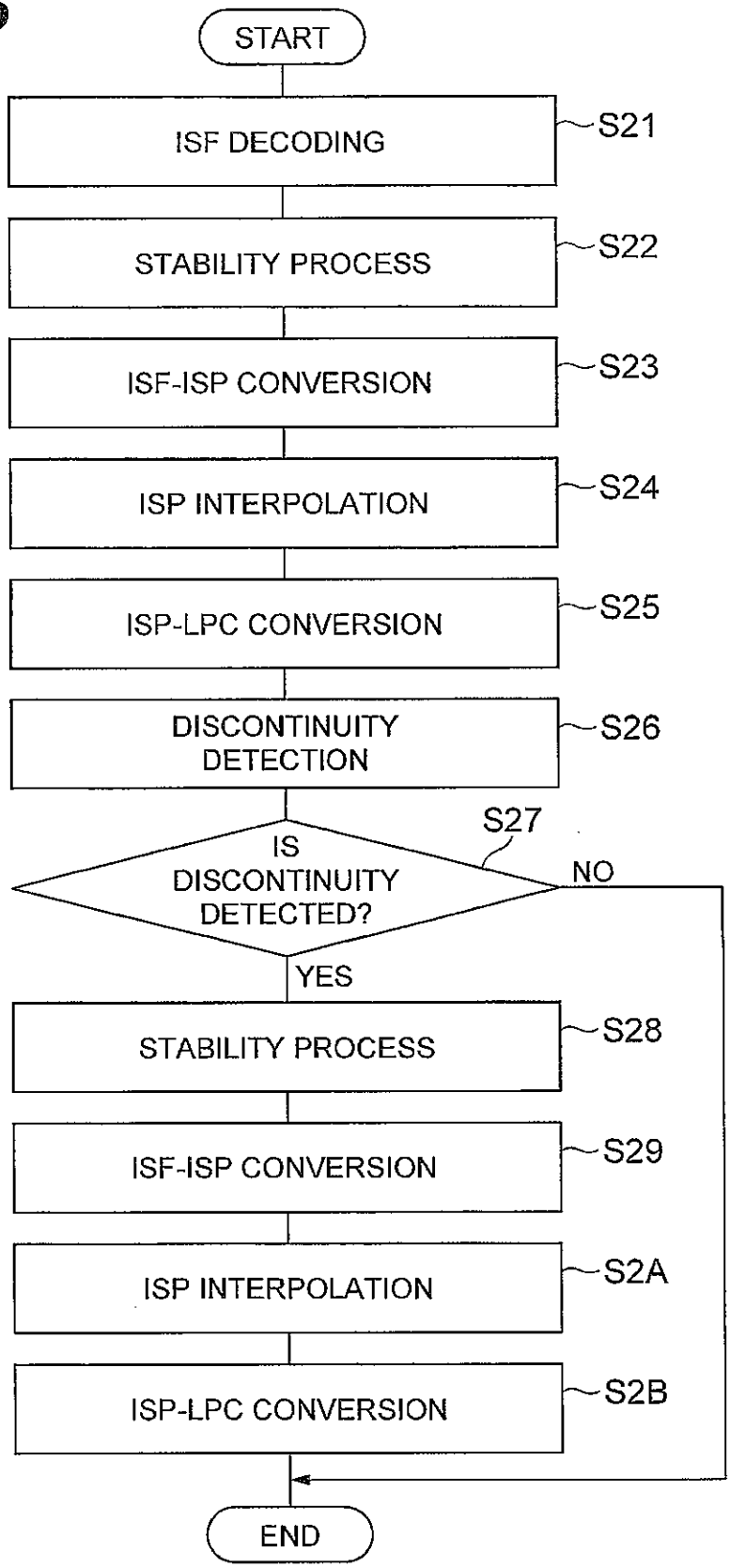
START
ISF DECODING
S21
STABILITY PROCESS
S22
ISF-ISP CONVERSION
S23
ISP INTERPOLATION
S24
ISP-LPC CONVERSION
S25
DISCONTINUITY DETECTION
S26
S27
IS DISCONTINUITY DETECTED?
NO
YES
STABILITY PROCESS
S28
ISF-ISP CONVERSION
S29
ISP INTERPOLATION
S2A
ISP-LPC CONVERSION
S2B
END

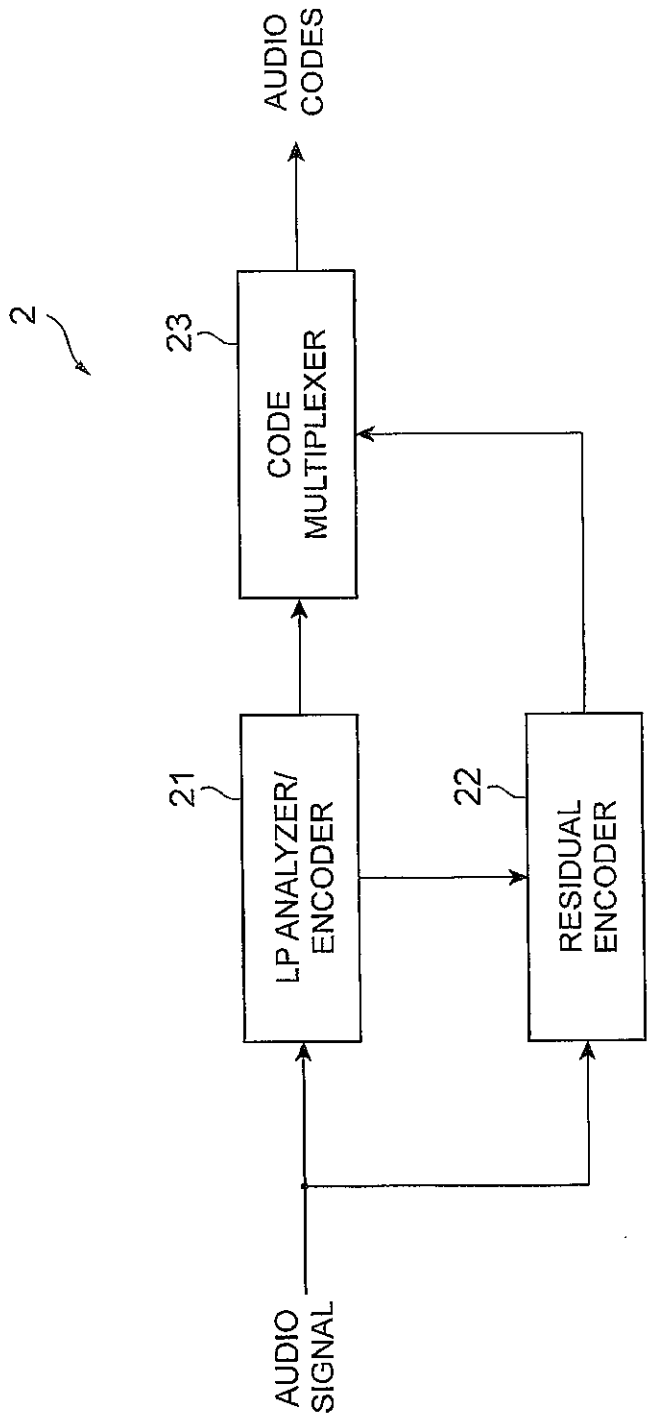
2
23
CODE MULTIPLEXER
AUDIO CODES
21
LP ANALYZER/ ENCODER
22
RESIDUAL ENCODER
AUDIO SIGNAL

Fig.16

Fig.17

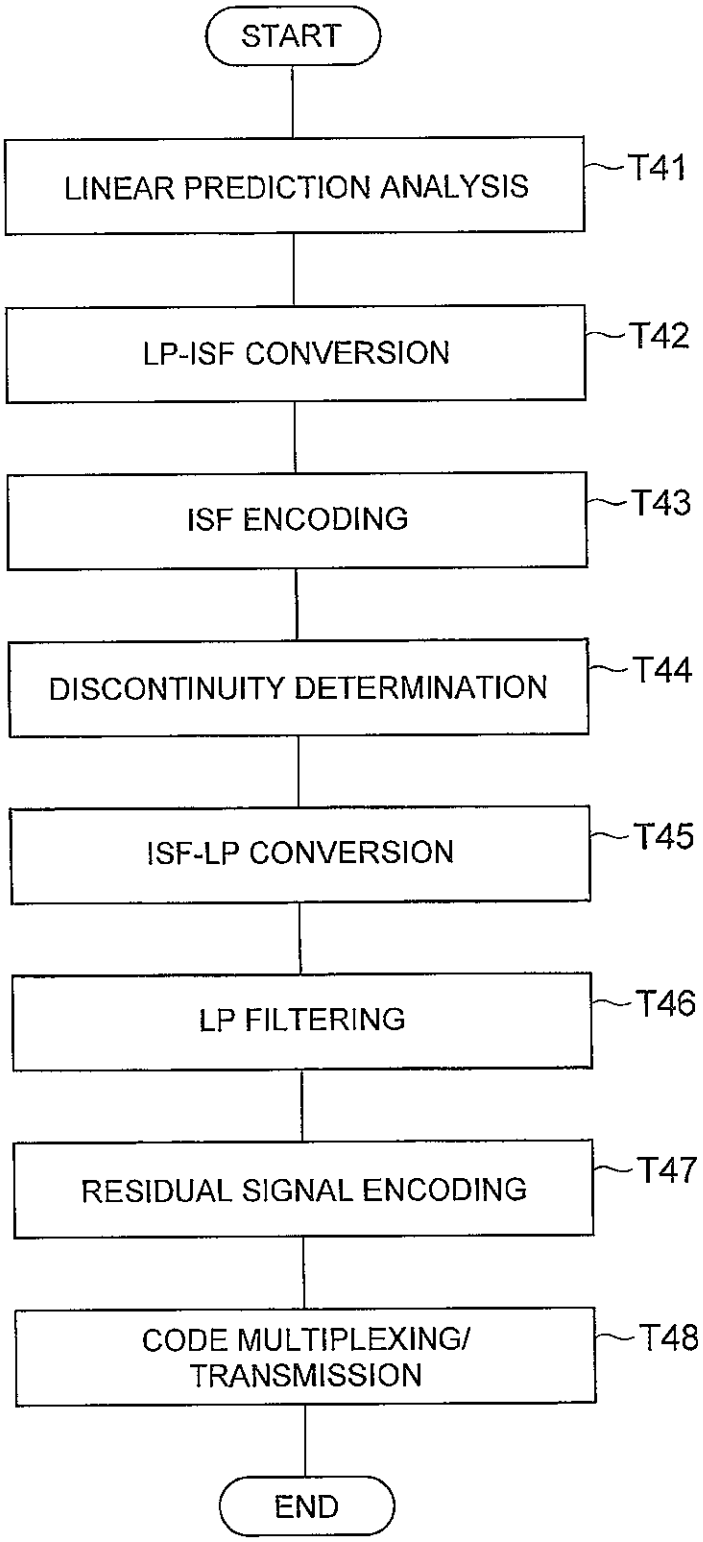
START
LINEAR PREDICTION ANALYSIS
T41
LP-ISF CONVERSION
T42
ISF ENCODING
T43
DISCONTINUITY DETERMINATION
T44
ISF-LP CONVERSION
T45
LP FILTERING
T46
RESIDUAL SIGNAL ENCODING
T47
CODE MULTIPLEXING/
TRANSMISSION
T48
END

Fig.18

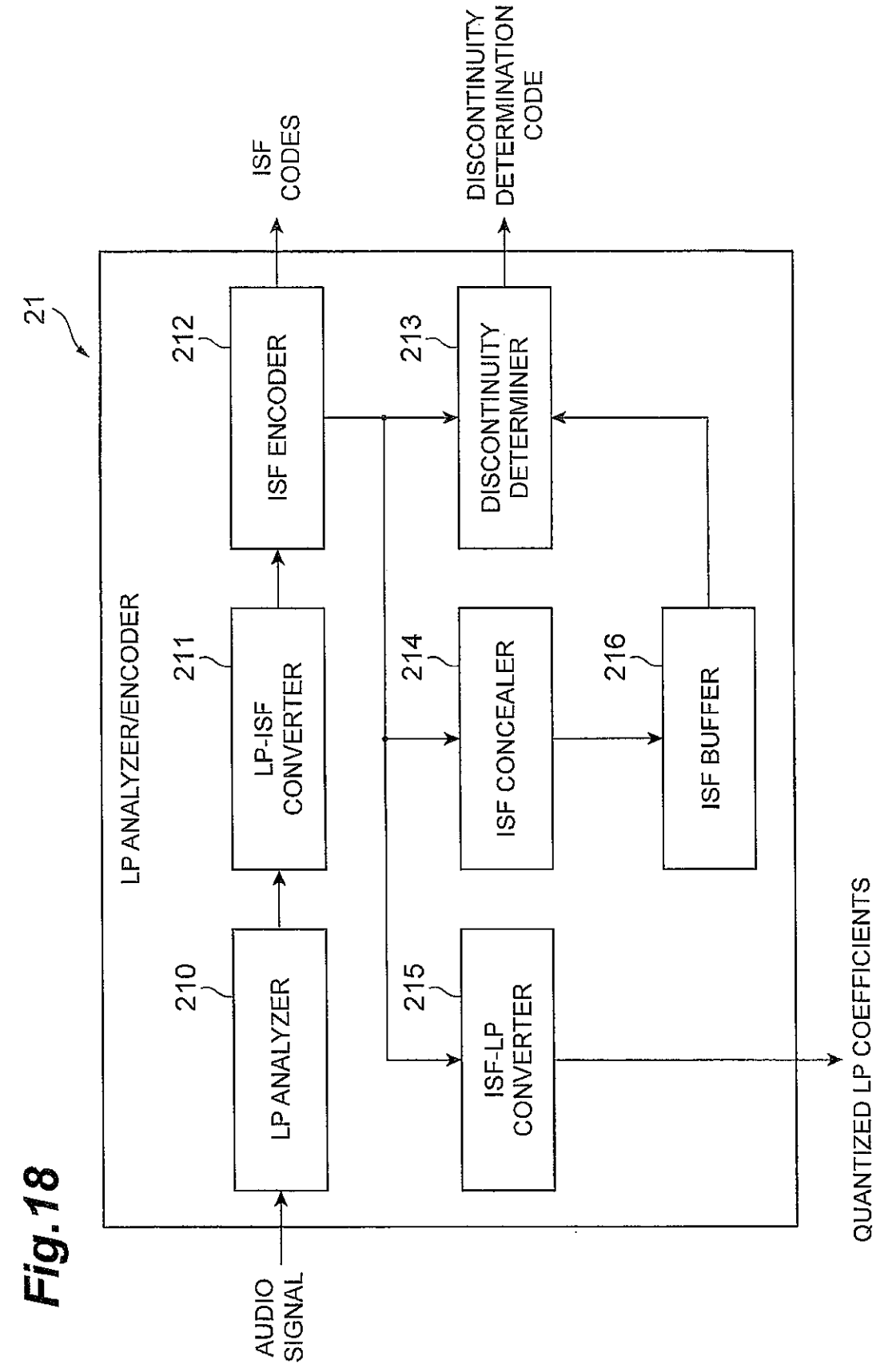
21
LP ANALYZER/ENCODER
AUDIO SIGNAL
210
LP ANALYZER
211
LP-ISF CONVERTER
212
ISF ENCODER
ISF CODES
213
DISCONTINUITY DETERMINER
DISCONTINUITY DETERMINATION CODE
214
ISF CONCEALER
215
ISF-LP CONVERTER
216
ISF BUFFER
QUANTIZED LP COEFFICIENTS

Fig.19

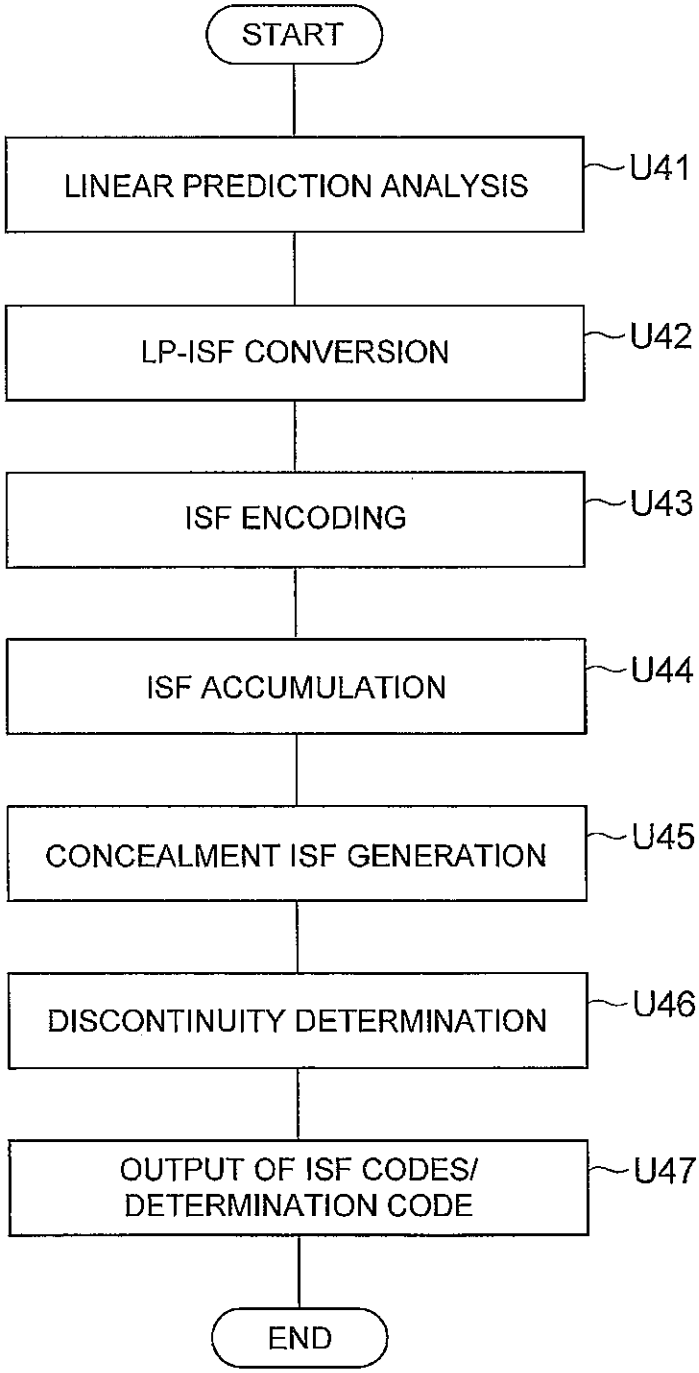
START
LINEAR PREDICTION ANALYSIS
U41
LP-ISF CONVERSION
U42
ISF ENCODING
U43
ISF ACCUMULATION
U44
CONCEALMENT ISF GENERATION
U45
DISCONTINUITY DETERMINATION
U46
OUTPUT OF ISF CODES/
DETERMINATION CODE
U47
END

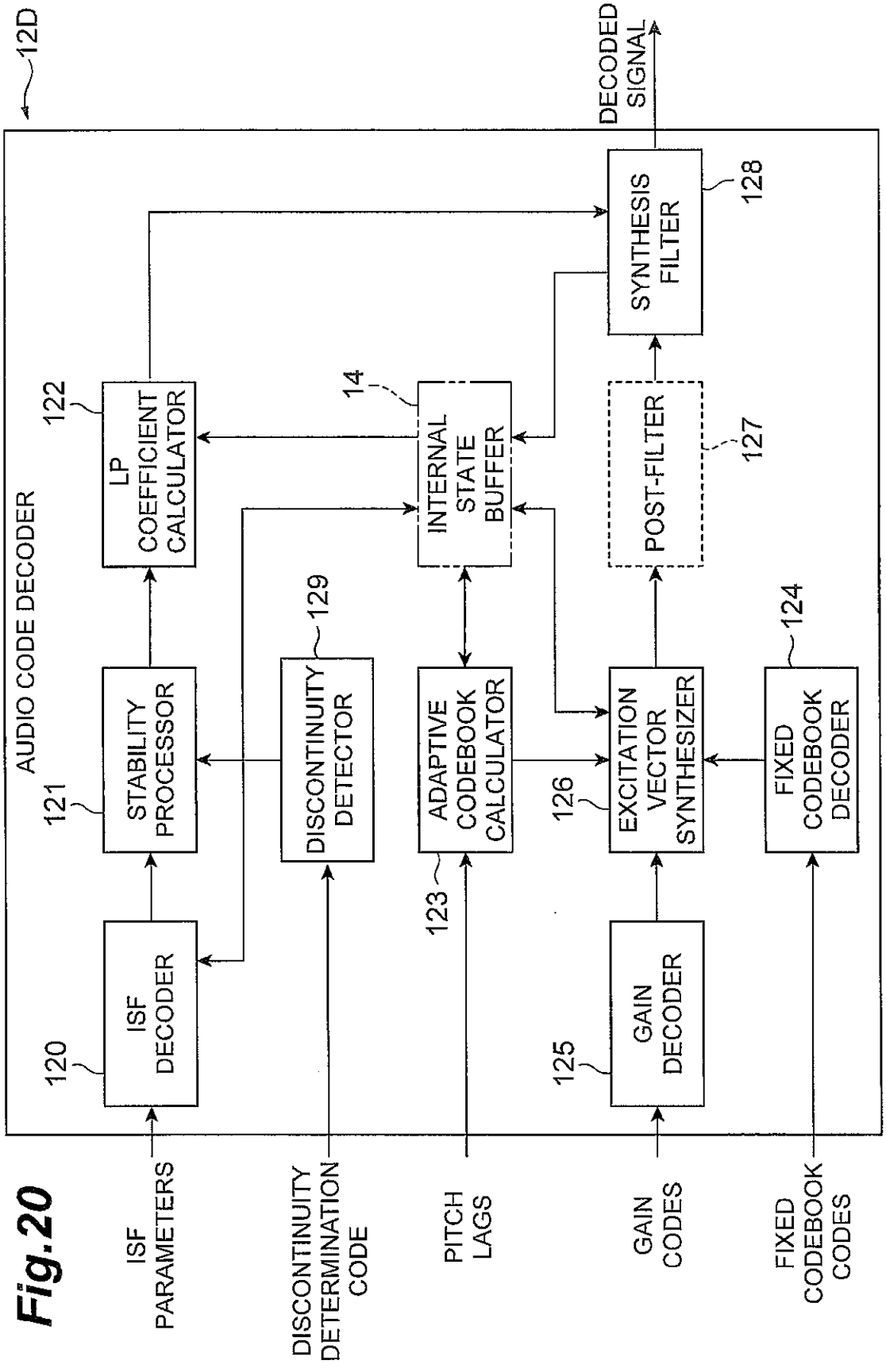
12D
AUDIO CODE DECODER
DECODED SIGNAL
ISF PARAMETERS
DISCONTINUITY DETERMINATION CODE
PITCH LAGS
GAIN CODES
FIXED CODEBOOK CODES
120
ISF DECODER
121
STABILITY PROCESSOR
122
LP COEFFICIENT CALCULATOR
123
ADAPTIVE CODEBOOK CALCULATOR
124
FIXED CODEBOOK DECODER
125
GAIN DECODER
126
EXCITATION VECTOR SYNTHESIZER
127
POST-FILTER
128
SYNTHESIS FILTER
129
DISCONTINUITY DETECTOR
14
INTERNAL STATE BUFFER

Fig.20

Fig.21

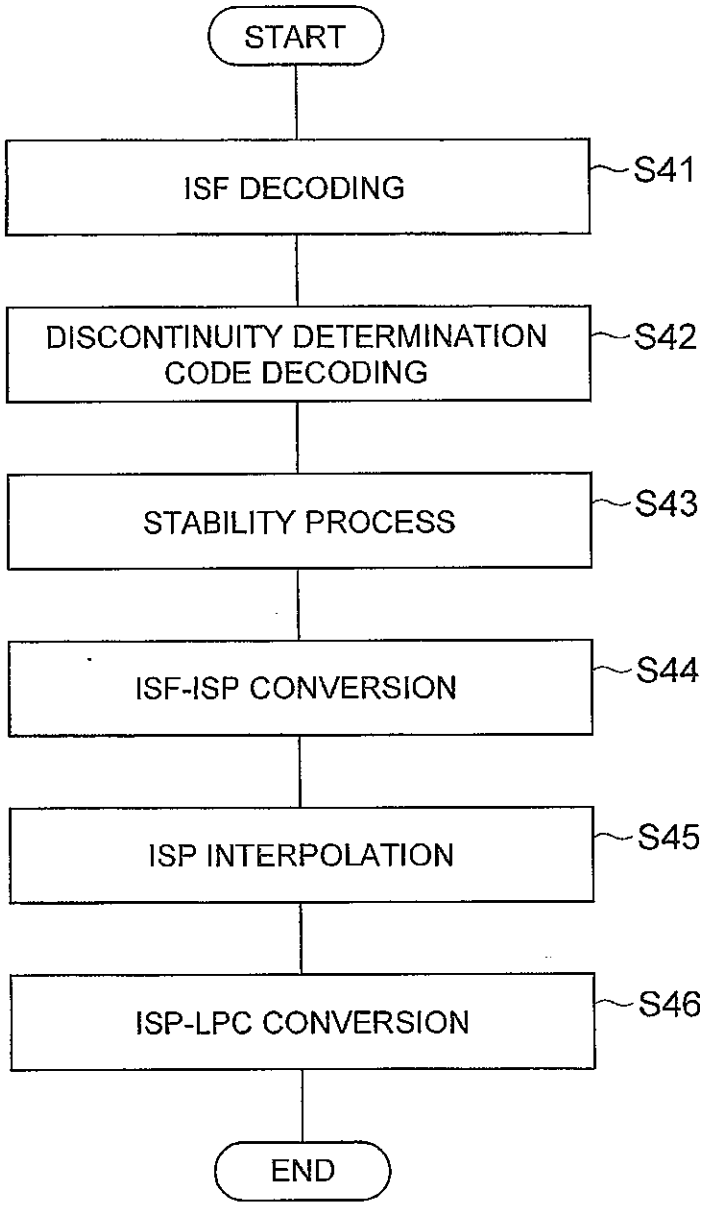
START
ISF DECODING
S41
DISCONTINUITY DETERMINATION CODE DECODING
S42
STABILITY PROCESS
S43
ISF-ISP CONVERSION
S44
ISP INTERPOLATION
S45
ISP-LPC CONVERSION
S46
END

Fig.22

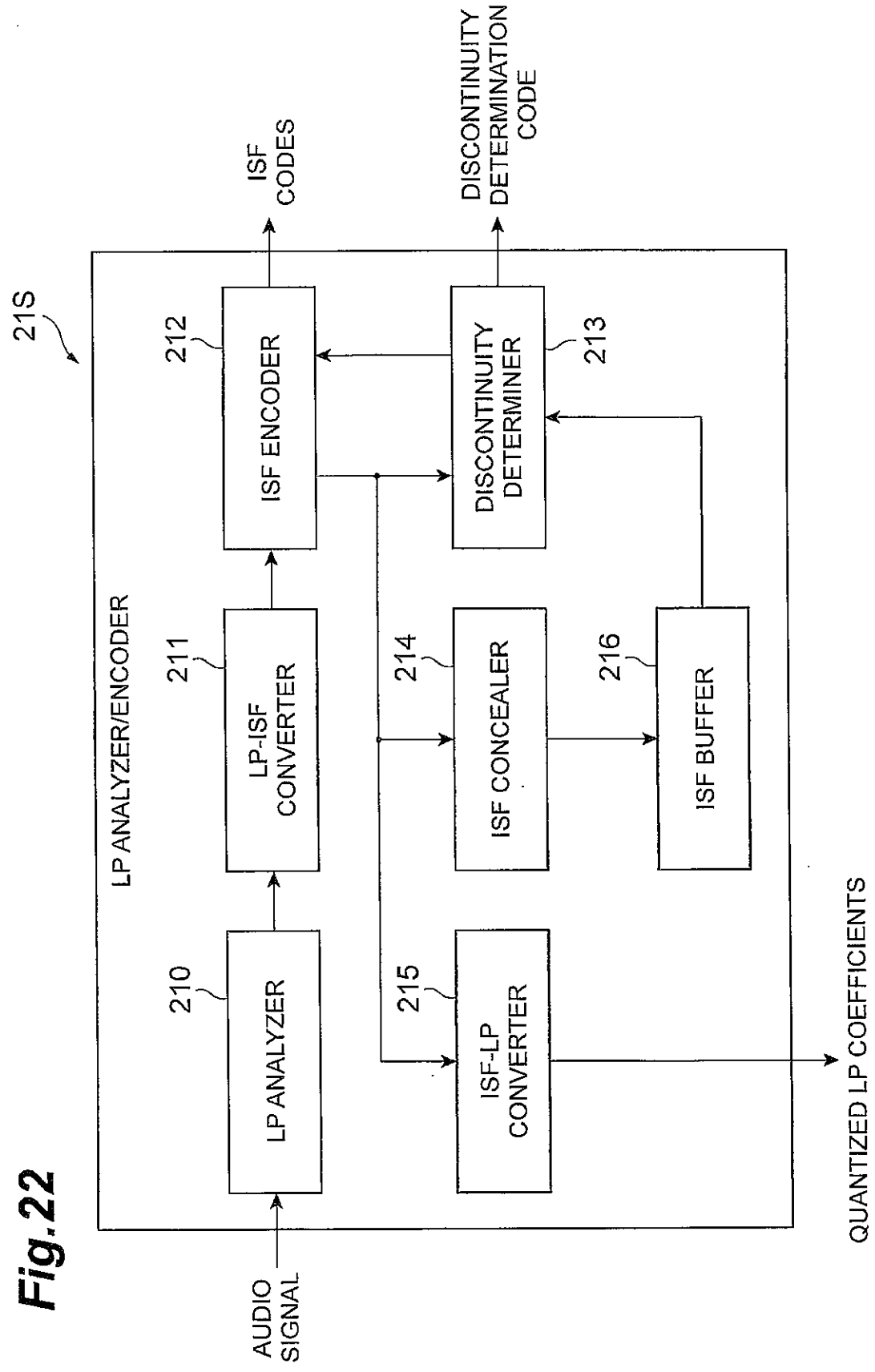
21S
LP ANALYZER/ENCODER
AUDIO SIGNAL
210
LP ANALYZER
211
LP-ISF CONVERTER
212
ISF ENCODER
ISF CODES
213
DISCONTINUITY DETERMINER
DISCONTINUITY DETERMINATION CODE
214
ISF CONCEALER
215
ISF-LP CONVERTER
216
ISF BUFFER
QUANTIZED LP COEFFICIENTS

Fig.23

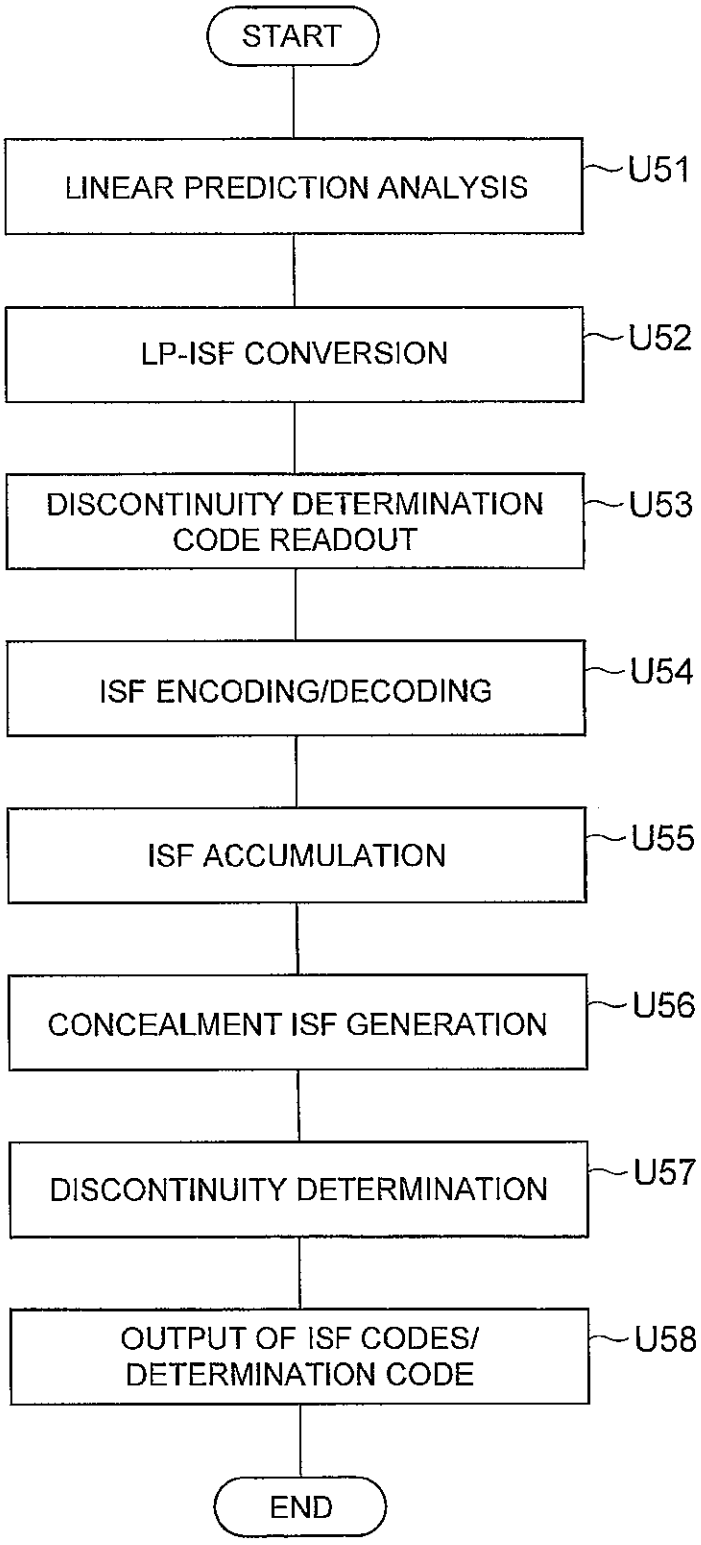
START
LINEAR PREDICTION ANALYSIS
U51
LP-ISF CONVERSION
U52
DISCONTINUITY DETERMINATION CODE READOUT
U53
ISF ENCODING/DECODING
U54
ISF ACCUMULATION
U55
CONCEALMENT ISF GENERATION
U56
DISCONTINUITY DETERMINATION
U57
OUTPUT OF ISF CODES/ DETERMINATION CODE
U58
END

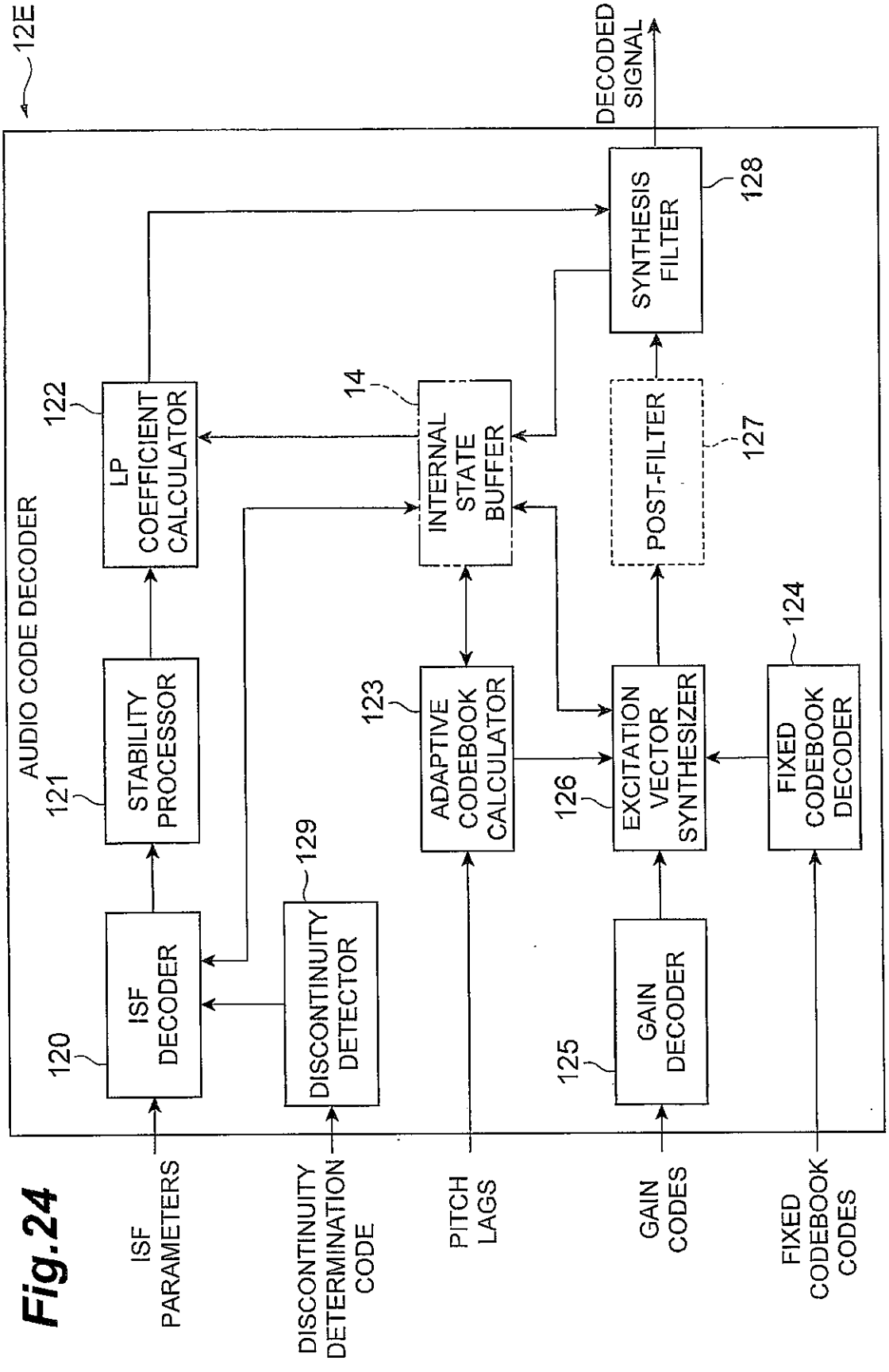
12E
AUDIO CODE DECODER
DECODED SIGNAL
SYNTHESIS FILTER
128
LP COEFFICIENT CALCULATOR
122
INTERNAL STATE BUFFER
14
POST-FILTER
127
STABILITY PROCESSOR
121
ADAPTIVE CODEBOOK CALCULATOR
123
EXCITATION VECTOR SYNTHESIZER
126
FIXED CODEBOOK DECODER
124
ISF DECODER
120
DISCONTINUITY DETECTOR
129
GAIN DECODER
125
ISF PARAMETERS
DISCONTINUITY DETERMINATION CODE
PITCH LAGS
GAIN CODES
FIXED CODEBOOK CODES

Fig.24

Fig.25

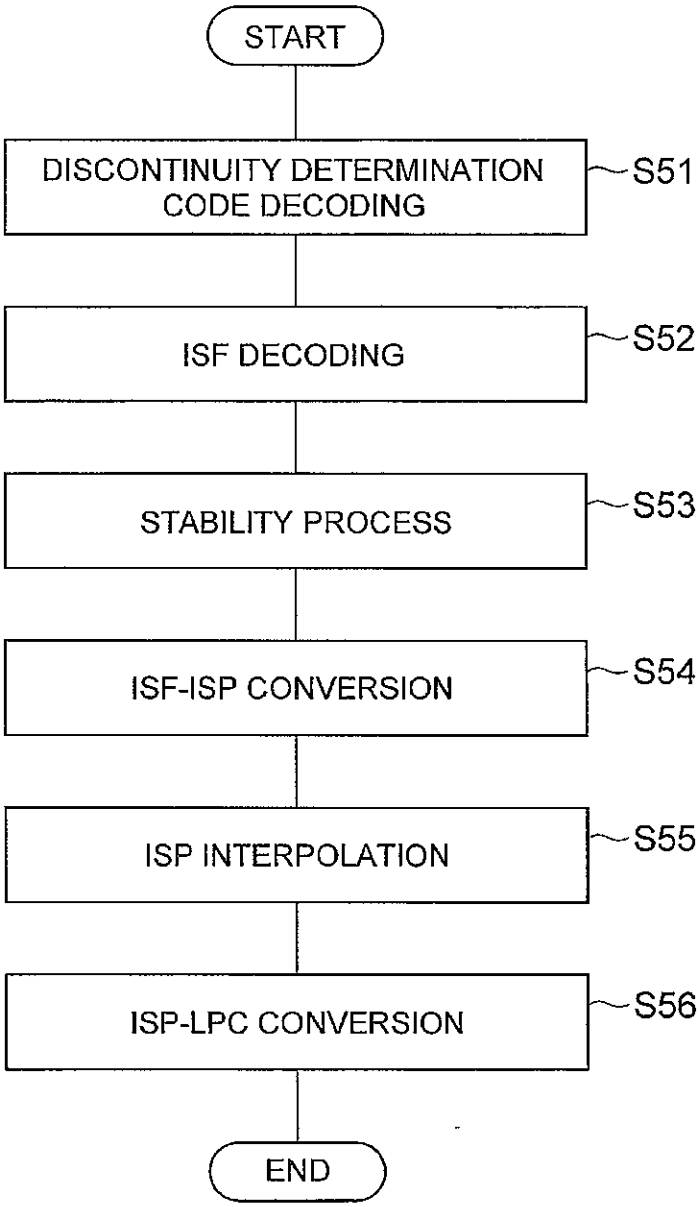
START
DISCONTINUITY DETERMINATION CODE DECODING
S51
ISF DECODING
S52
STABILITY PROCESS
S53
ISF-ISP CONVERSION
S54
ISP INTERPOLATION
S55
ISP-LPC CONVERSION
S56
END

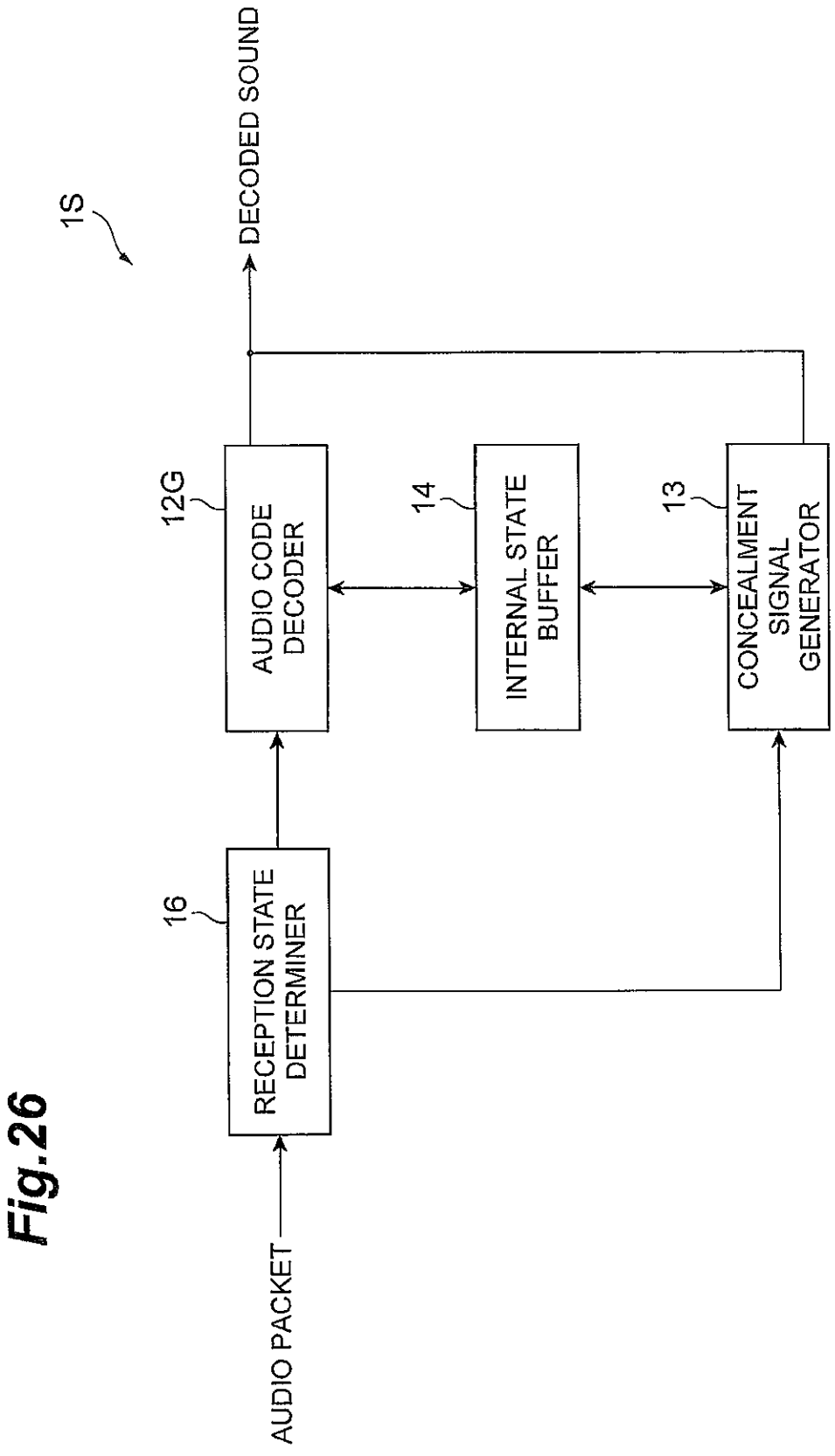
1S
DECODED SOUND
12G
AUDIO CODE DECODER
14
INTERNAL STATE BUFFER
13
CONCEALMENT SIGNAL GENERATOR
16
RECEPTION STATE DETERMINER
AUDIO PACKET

Fig.26

Fig.27

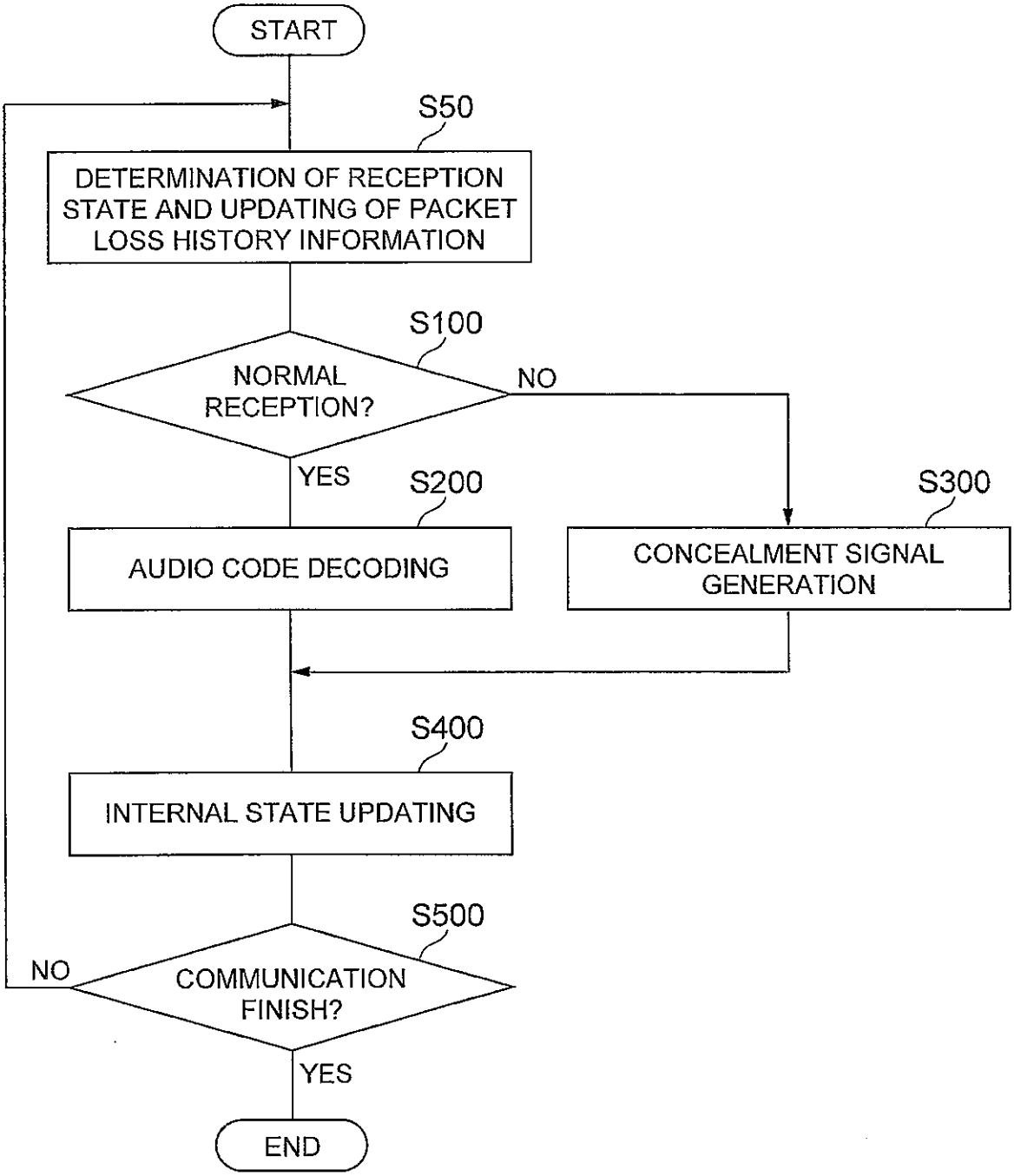
START
S50
DETERMINATION OF RECEPTION STATE AND UPDATING OF PACKET LOSS HISTORY INFORMATION
S100
NORMAL RECEPTION?
NO
YES
S200
AUDIO CODE DECODING
S300
CONCEALMENT SIGNAL GENERATION
S400
INTERNAL STATE UPDATING
S500
COMMUNICATION FINISH?
NO
YES
END

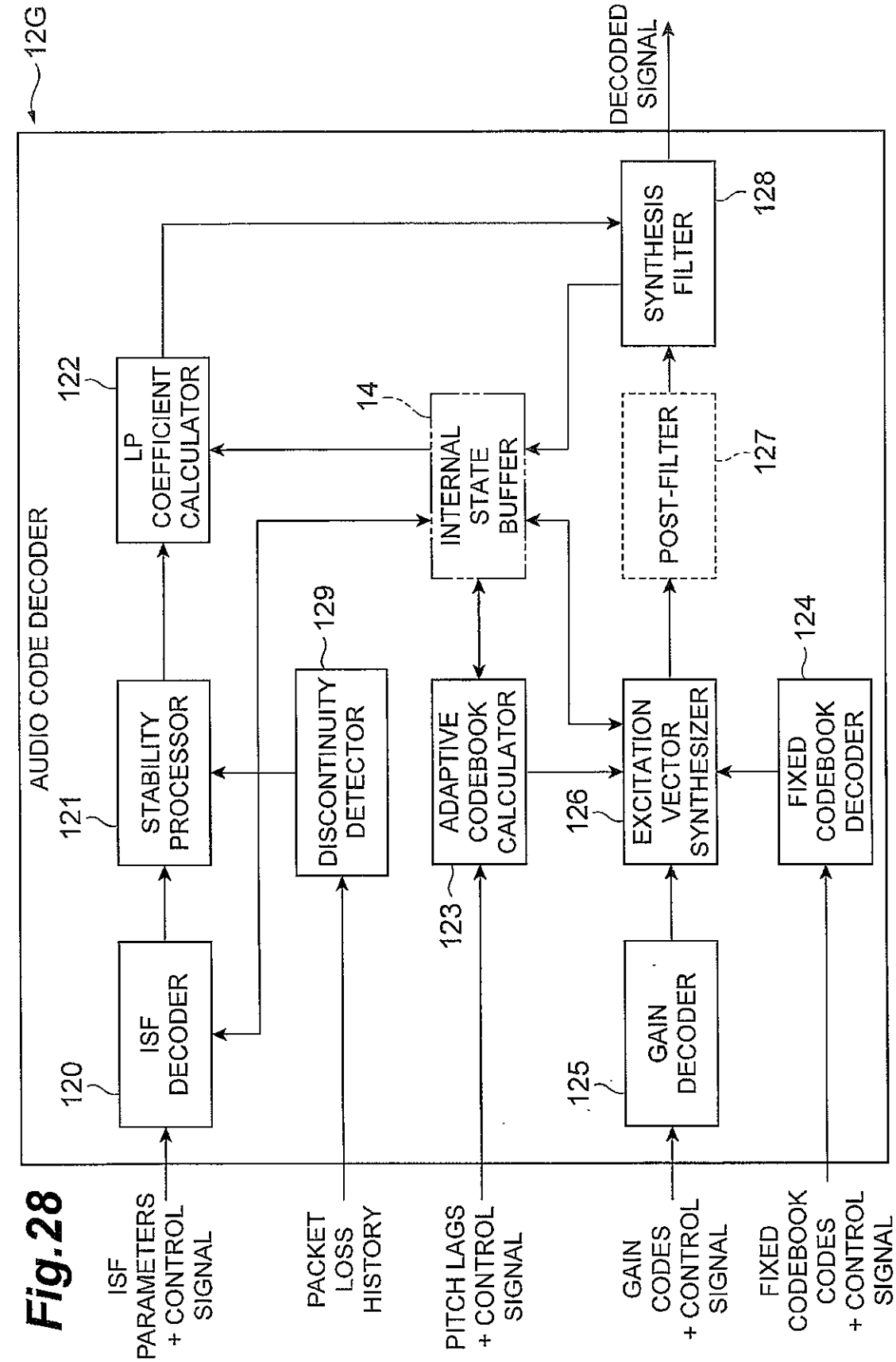
12G
AUDIO CODE DECODER
DECODED SIGNAL
ISF PARAMETERS + CONTROL SIGNAL
PACKET LOSS HISTORY
PITCH LAGS + CONTROL SIGNAL
GAIN CODES + CONTROL SIGNAL
FIXED CODEBOOK CODES + CONTROL SIGNAL
120 ISF DECODER
121 STABILITY PROCESSOR
122 LP COEFFICIENT CALCULATOR
123 ADAPTIVE CODEBOOK CALCULATOR
124 FIXED CODEBOOK DECODER
125 GAIN DECODER
126 EXCITATION VECTOR SYNTHESIZER
127 POST-FILTER
128 SYNTHESIS FILTER
129 DISCONTINUITY DETECTOR
14 INTERNAL STATE BUFFER

Fig.28

Fig.29

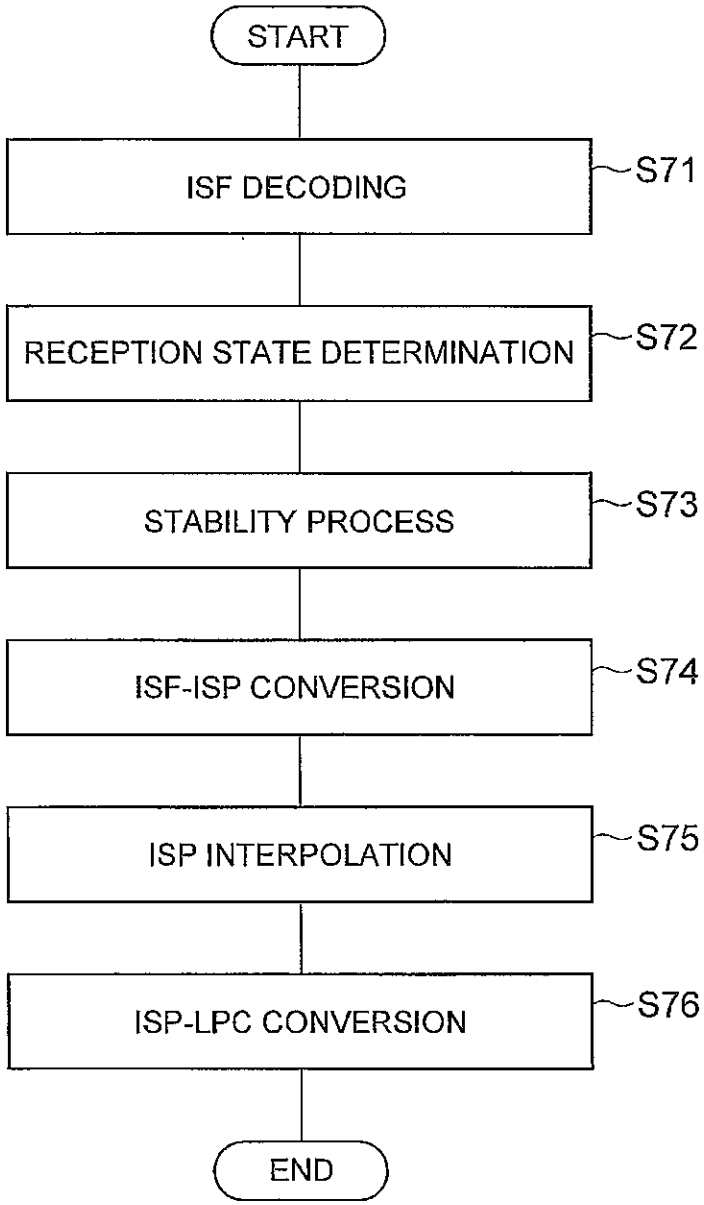
START
ISF DECODING
S71
RECEPTION STATE DETERMINATION
S72
STABILITY PROCESS
S73
ISF-ISP CONVERSION
S74
ISP INTERPOLATION
S75
ISP-LPC CONVERSION
S76
END

Fig.30

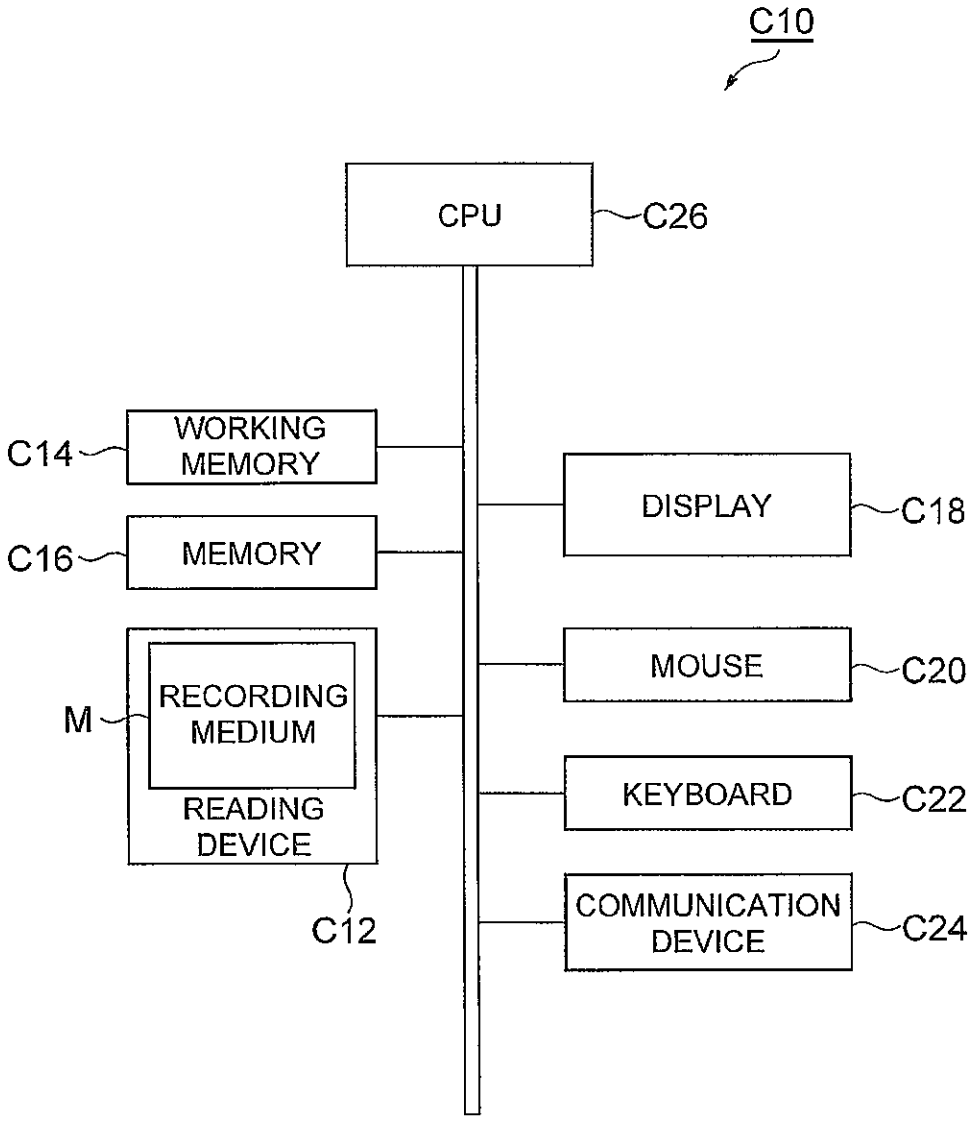
C10
CPU
C26
C14
WORKING MEMORY
C16
MEMORY
M
RECORDING MEDIUM
READING DEVICE
C12
DISPLAY
C18
MOUSE
C20
KEYBOARD
C22
COMMUNICATION DEVICE
C24

Fig.31

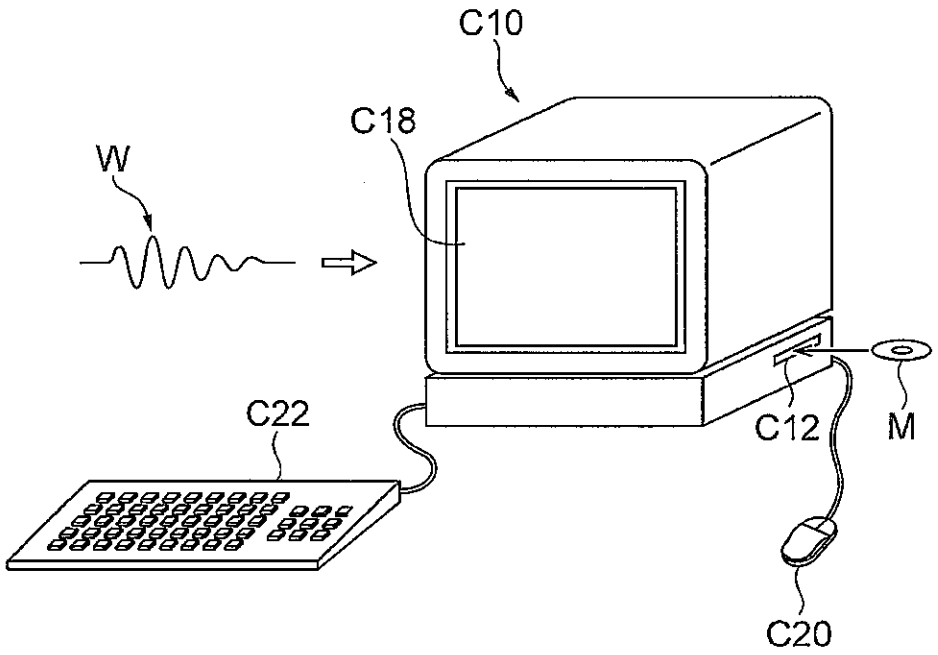

Fig.32

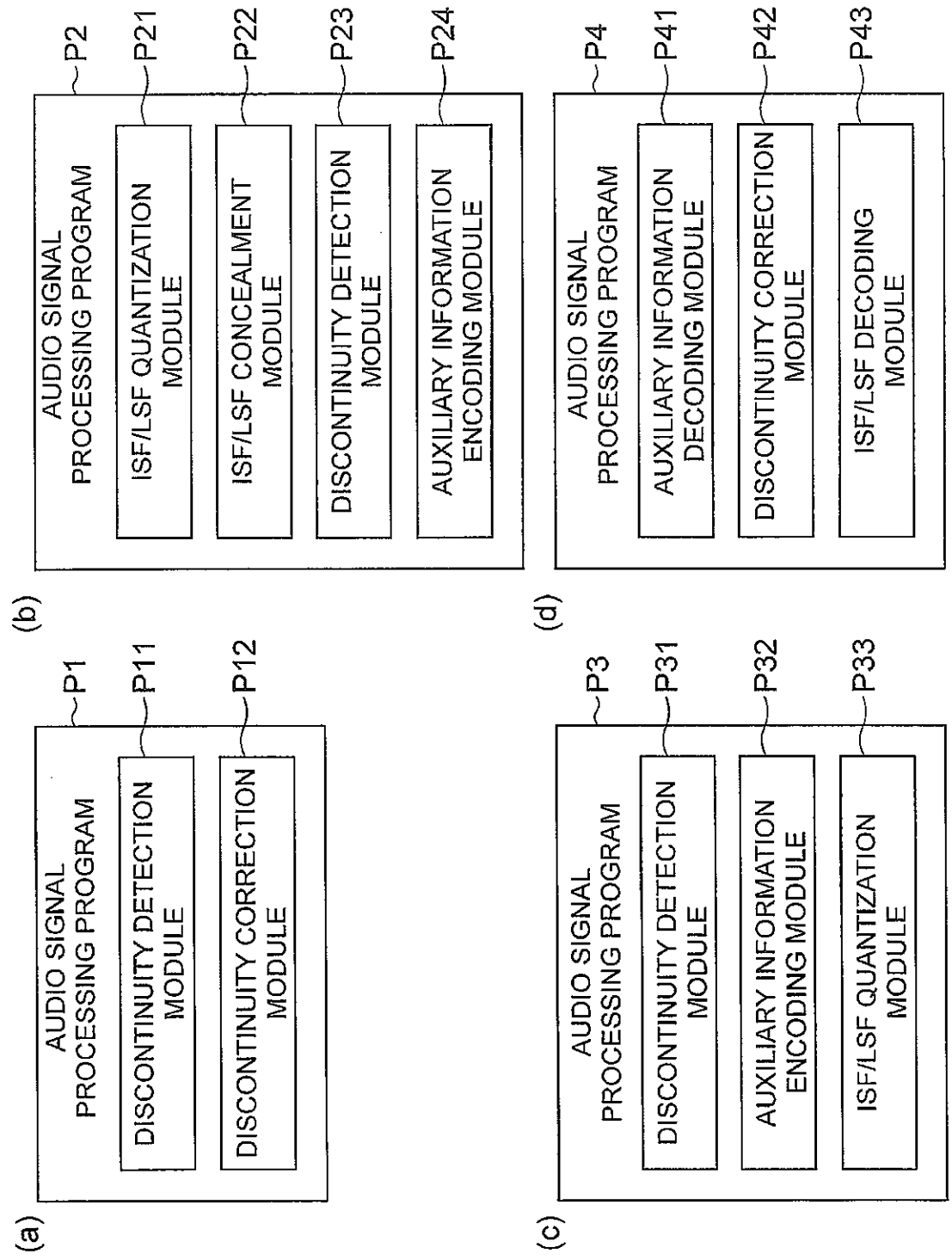
(a)
P1
AUDIO SIGNAL PROCESSING PROGRAM
P11
DISCONTINUITY DETECTION MODULE
P12
DISCONTINUITY CORRECTION MODULE
(b)
P2
AUDIO SIGNAL PROCESSING PROGRAM
P21
ISF/LSF QUANTIZATION MODULE
P22
ISF/LSF CONCEALMENT MODULE
P23
DISCONTINUITY DETECTION MODULE
P24
AUXILIARY INFORMATION ENCODING MODULE
(c)
P3
AUDIO SIGNAL PROCESSING PROGRAM
P31
DISCONTINUITY DETECTION MODULE
P32
AUXILIARY INFORMATION ENCODING MODULE
P33
ISF/LSF QUANTIZATION MODULE
(d)
P4
AUDIO SIGNAL PROCESSING PROGRAM
P41
AUXILIARY INFORMATION DECODING MODULE
P42
DISCONTINUITY CORRECTION MODULE
P43
ISF/LSF DECODING MODULE