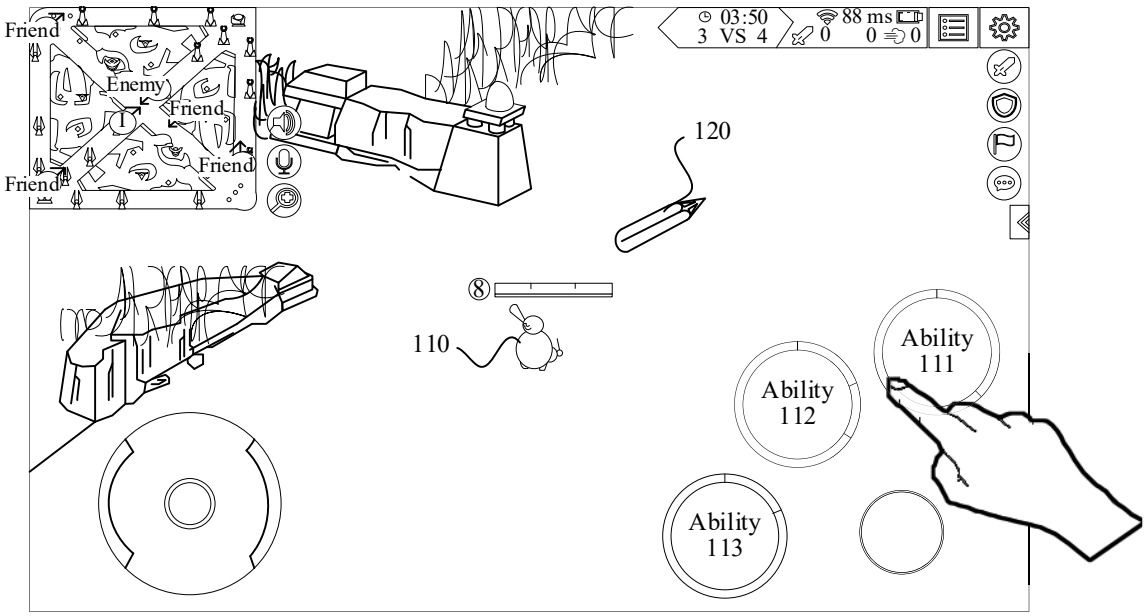
Friend
Enemy
Friend
Friend
Friend
03:50
3 VS 4
88 ms
0
0
0
120
8
110
Ability
111
Ability
112
Ability
113

FIG. 1

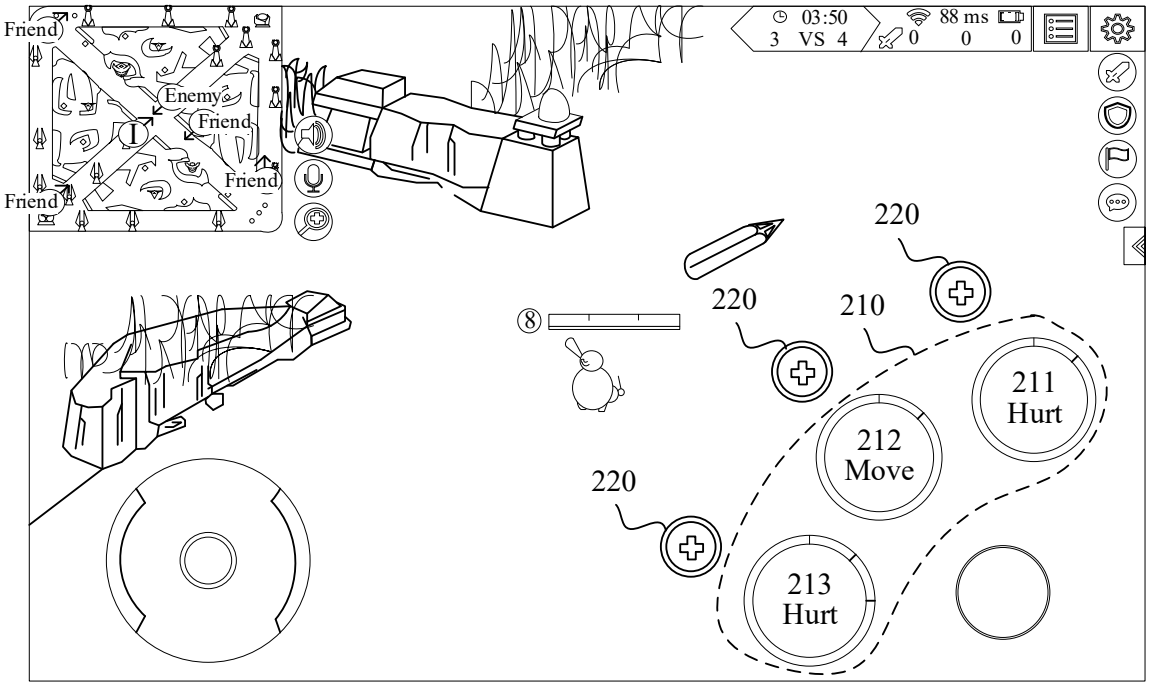
Friend
Enemy
Friend
Friend
Friend
03:50
3 VS 4
88 ms
0 0 0
220
220
210
211
Hurt
212
Move
220
213
Hurt

FIG. 2

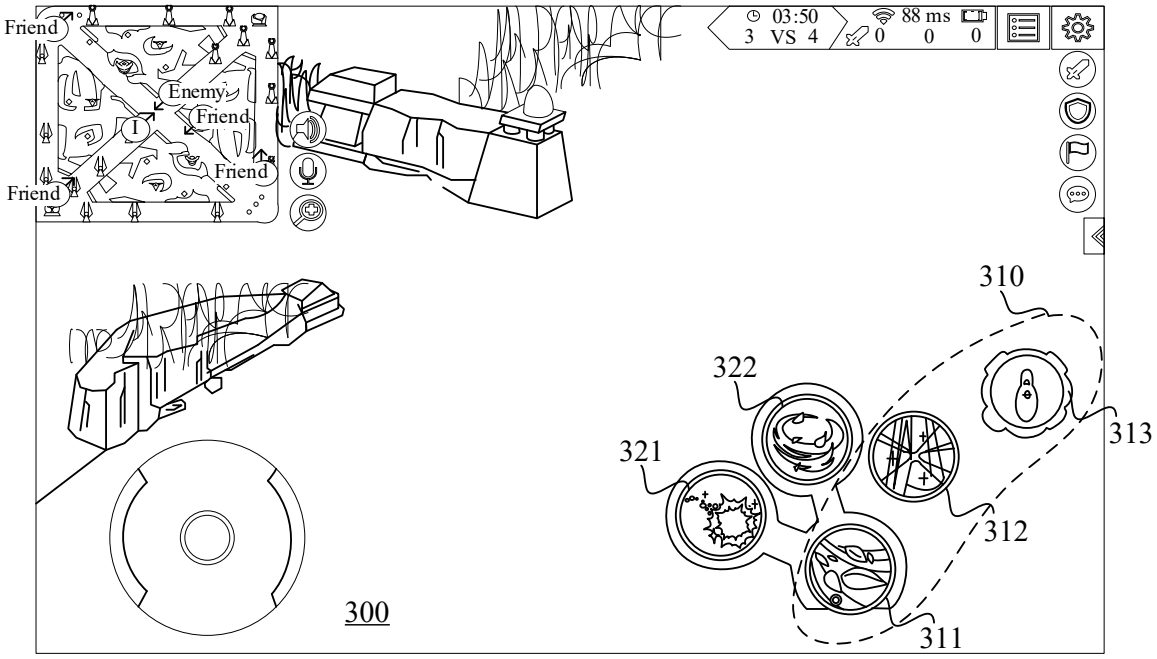
Friend
Enemy
Friend
Friend
Friend
03:50
3 VS 4
88 ms
0 0 0
310
322
313
321
312
311
300

FIG. 3

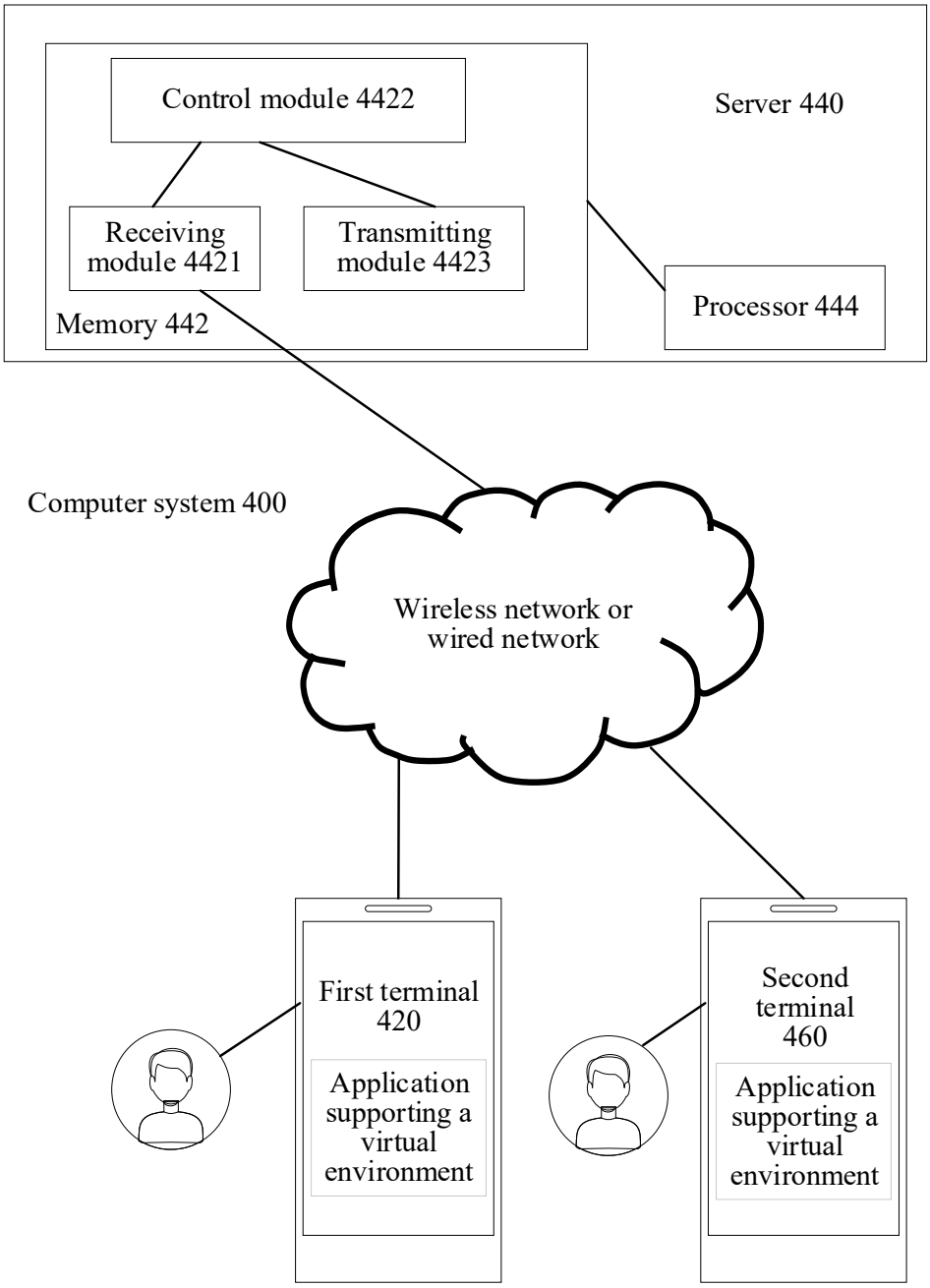
Control module 4422
Server 440
Receiving module 4421
Transmitting module 4423
Memory 442
Processor 444
Computer system 400
Wireless network or wired network
First terminal 420
Application supporting a virtual environment
Second terminal 460
Application supporting a virtual environment

FIG. 4

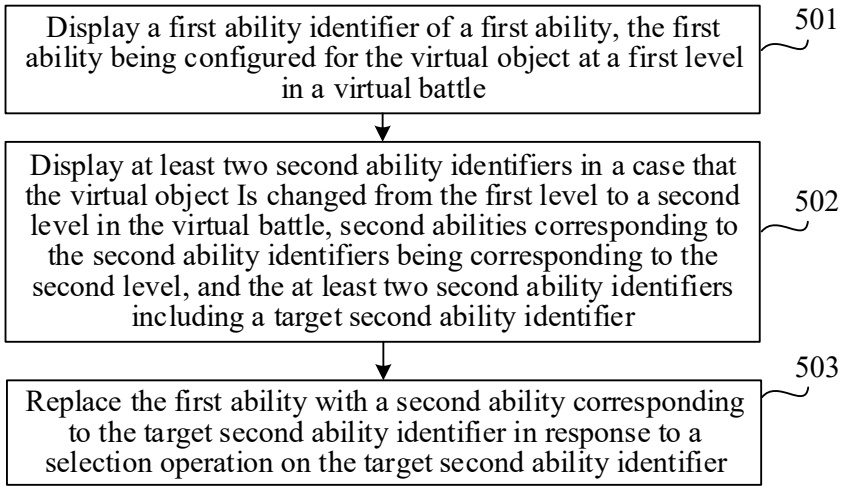
Display a first ability identifier of a first ability, the first ability being configured for the virtual object at a first level in a virtual battle
501
Display at least two second ability identifiers in a case that the virtual object Is changed from the first level to a second level in the virtual battle, second abilities corresponding to the second ability identifiers being corresponding to the second level, and the at least two second ability identifiers including a target second ability identifier
502
Replace the first ability with a second ability corresponding to the target second ability identifier in response to a selection operation on the target second ability identifier
503

FIG. 5

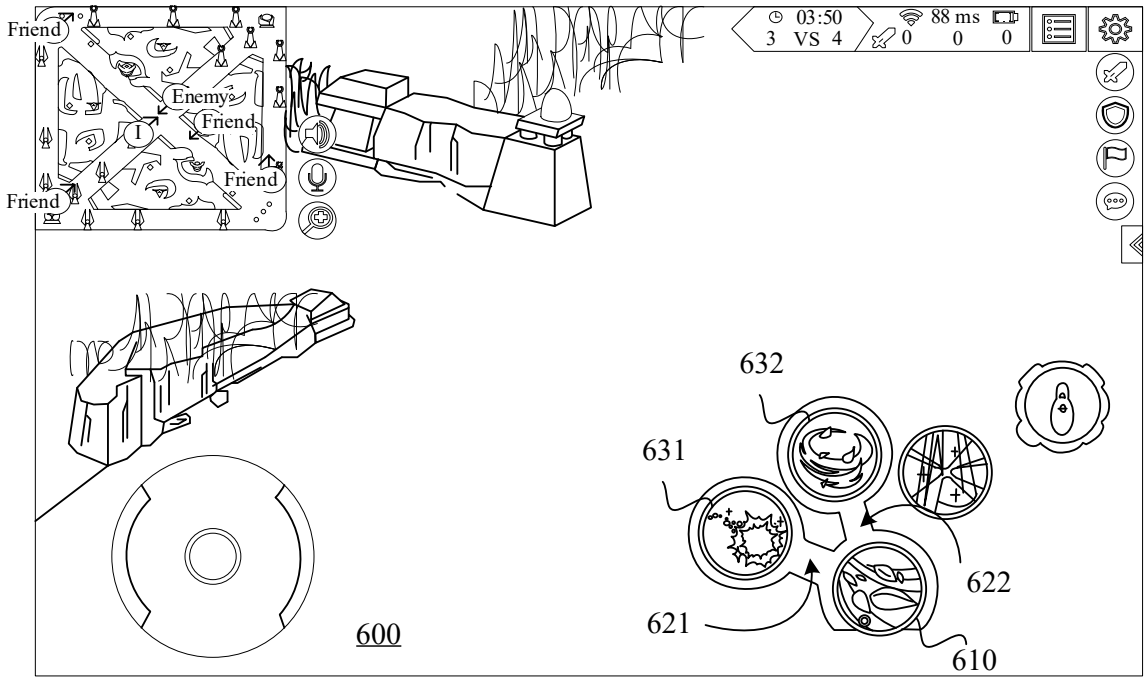
Friend
Enemy
Friend
Friend
Friend
03:50
3 VS 4
88 ms
0 0 0
632
631
622
621
610
600

FIG. 6

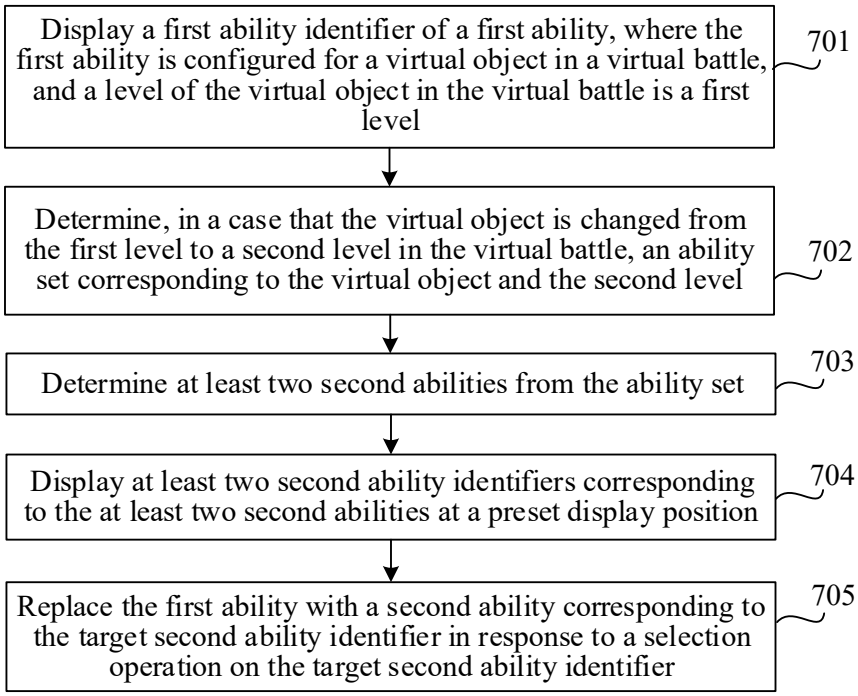
Display a first ability identifier of a first ability, where the first ability is configured for a virtual object in a virtual battle, and a level of the virtual object in the virtual battle is a first level
701
Determine, in a case that the virtual object is changed from the first level to a second level in the virtual battle, an ability set corresponding to the virtual object and the second level
702
Determine at least two second abilities from the ability set
703
Display at least two second ability identifiers corresponding to the at least two second abilities at a preset display position
704
Replace the first ability with a second ability corresponding to the target second ability identifier in response to a selection operation on the target second ability identifier
705

FIG. 7

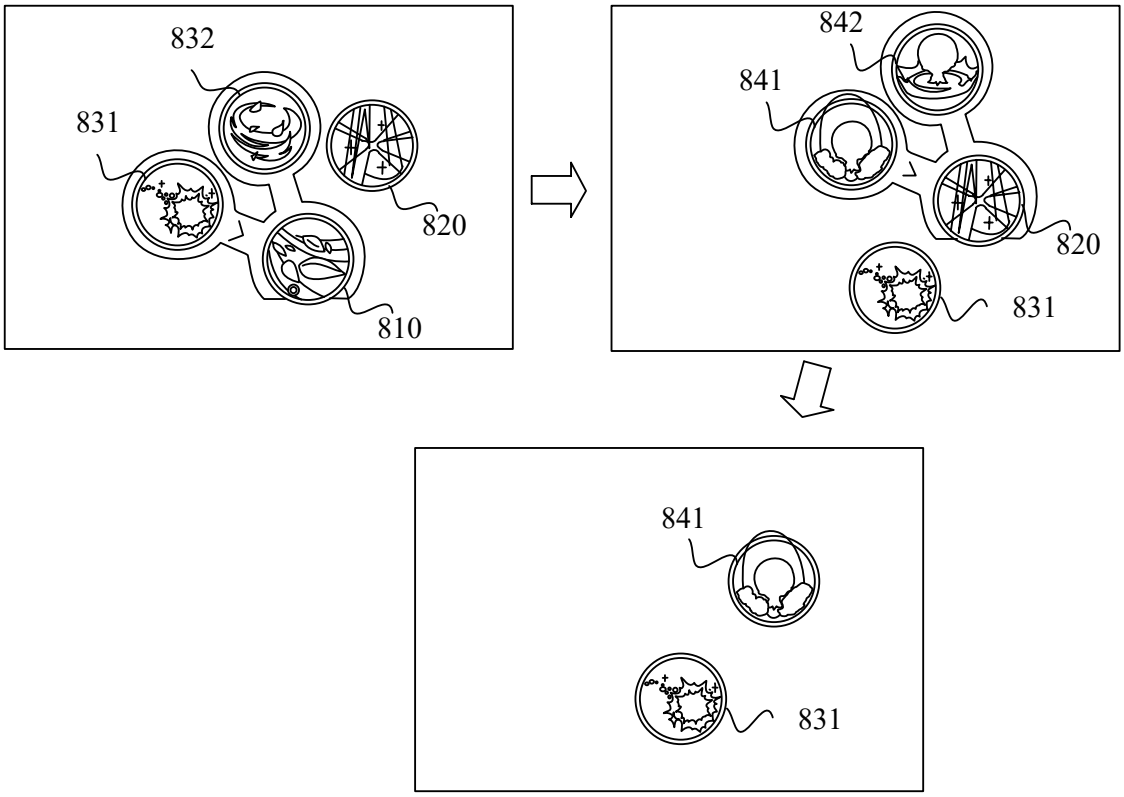

FIG. 8

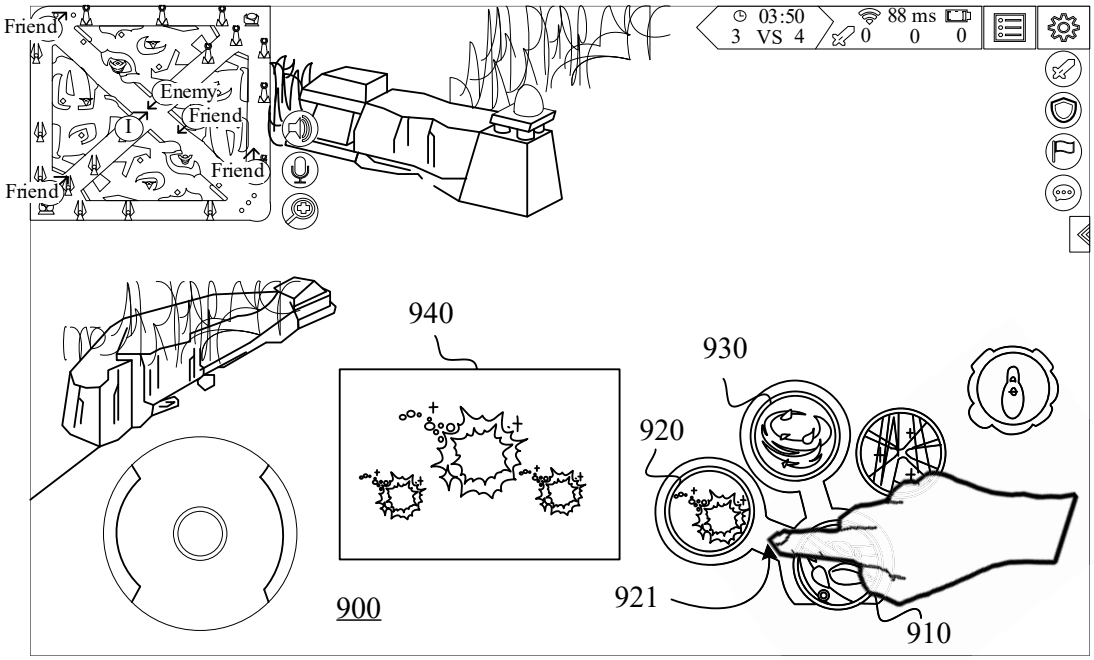
Friend
Enemy
Friend
Friend
Friend
03:50
3 VS 4
88 ms
0 0 0
940
930
920
921
910
900

FIG. 9

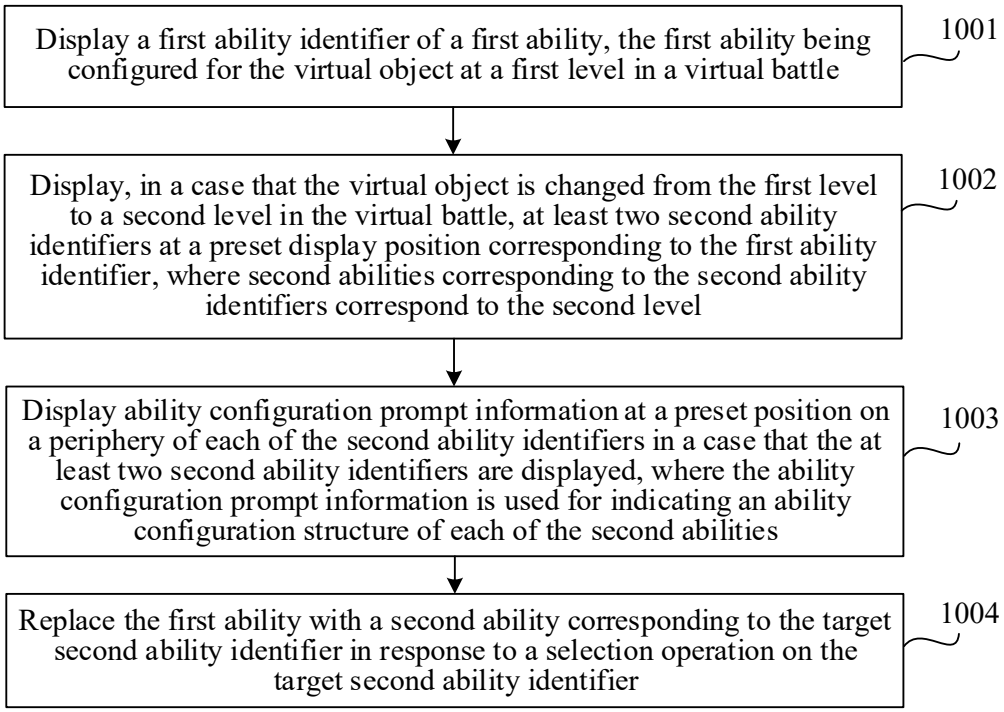
Display a first ability identifier of a first ability, the first ability being configured for the virtual object at a first level in a virtual battle
1001
Display, in a case that the virtual object is changed from the first level to a second level in the virtual battle, at least two second ability identifiers at a preset display position corresponding to the first ability identifier, where second abilities corresponding to the second ability identifiers correspond to the second level
1002
Display ability configuration prompt information at a preset position on a periphery of each of the second ability identifiers in a case that the at least two second ability identifiers are displayed, where the ability configuration prompt information is used for indicating an ability configuration structure of each of the second abilities
1003
Replace the first ability with a second ability corresponding to the target second ability identifier in response to a selection operation on the target second ability identifier
1004

FIG. 10

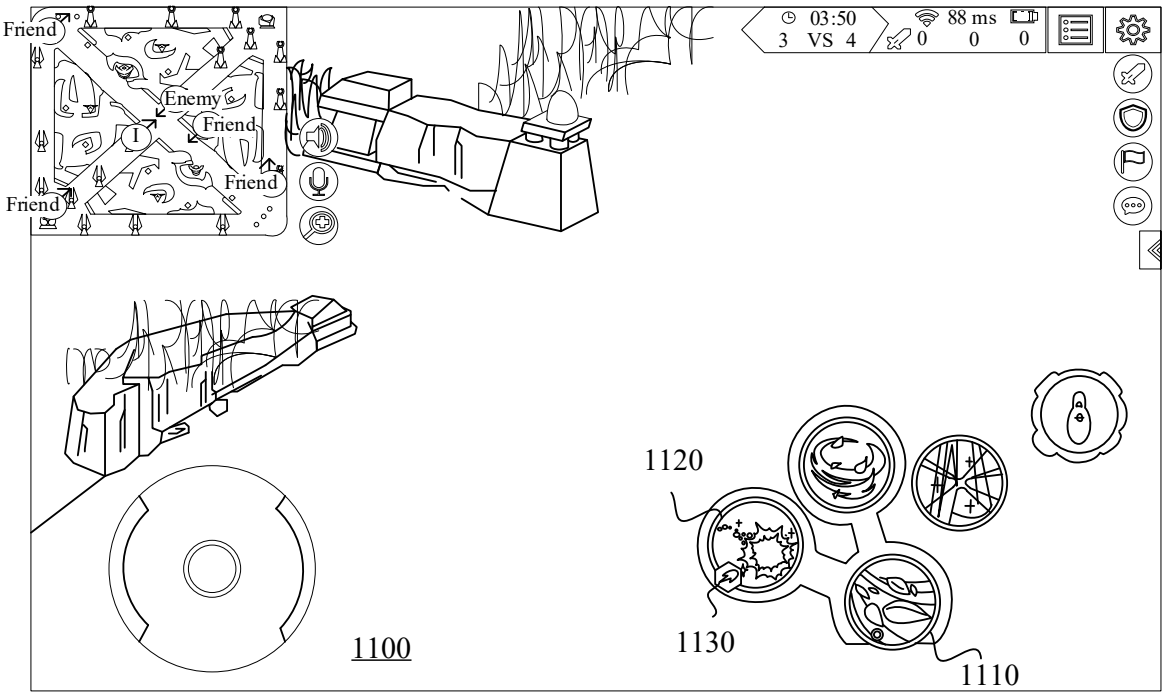
Friend
Enemy
Friend
Friend
Friend
03:50
3 VS 4
88 ms
0 0 0
1120
1130
1110
1100

FIG. 11

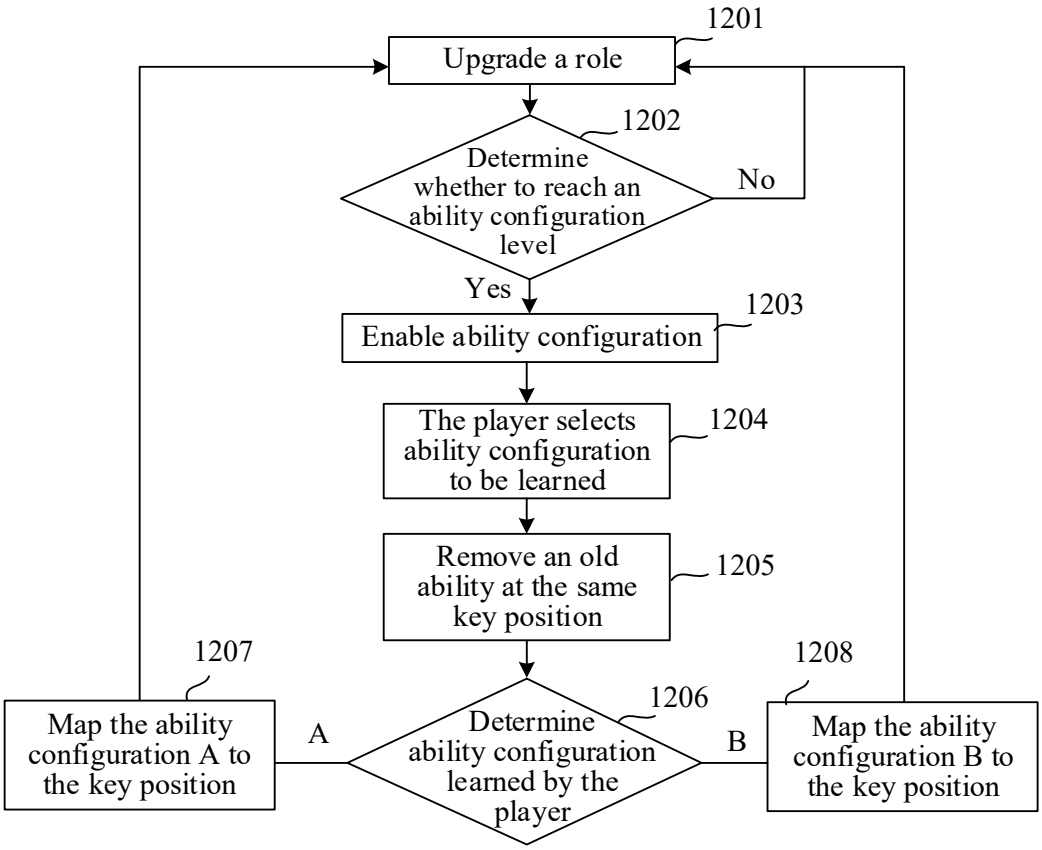
1201
Upgrade a role
1202
Determine whether to reach an ability configuration level
No
Yes
1203
Enable ability configuration
The player selects ability configuration to be learned
1204
Remove an old ability at the same key position
1205
1207
1208
1206
Map the ability configuration A to the key position
A
Determine ability configuration learned by the player
B
Map the ability configuration B to the key position

FIG. 12

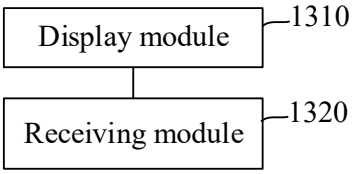
Display module
1310
Receiving module
1320

FIG. 13

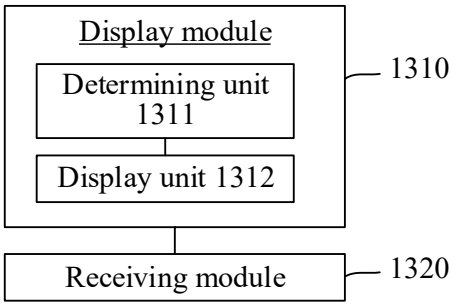
Display module
Determining unit 1311
Display unit 1312
1310
Receiving module
1320

FIG. 14

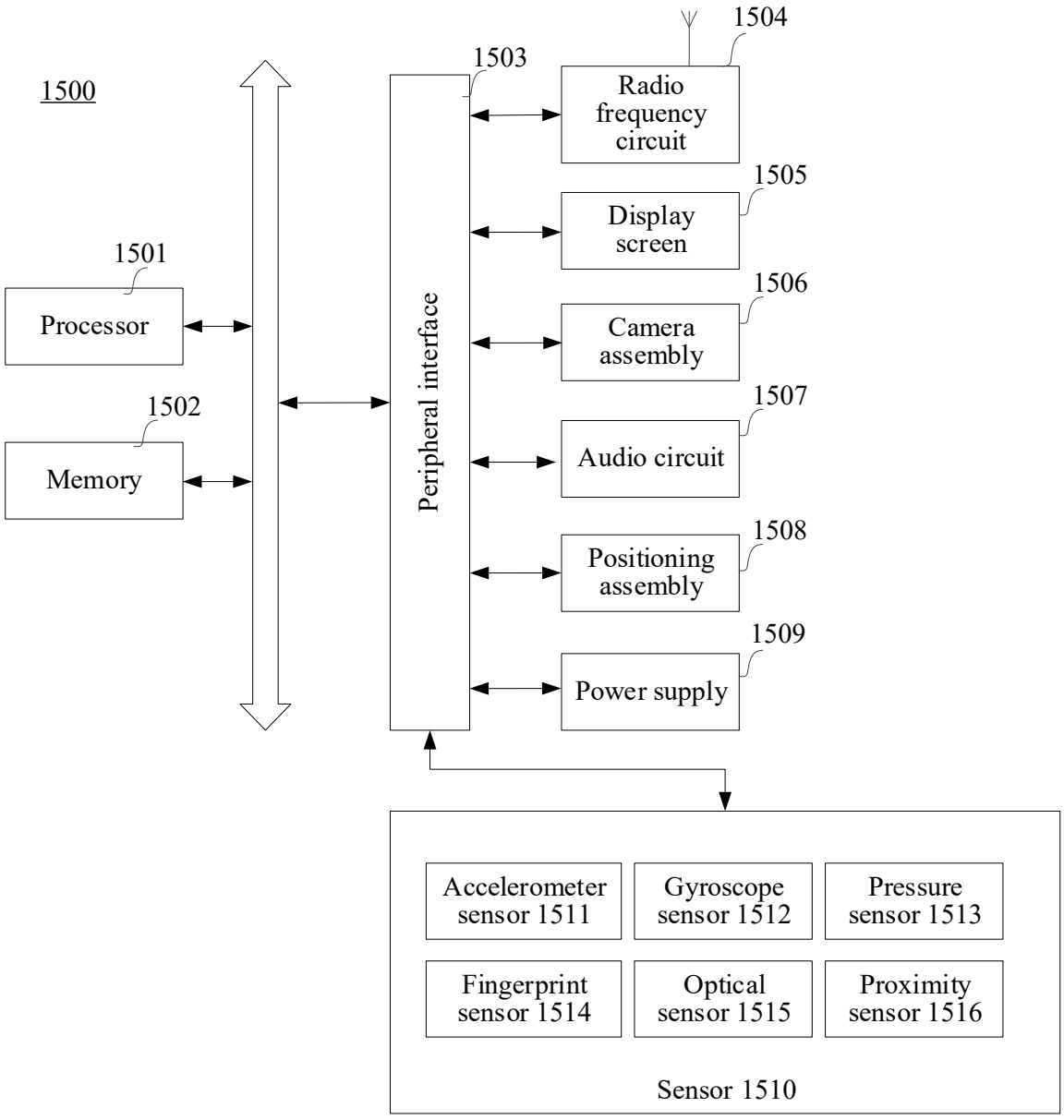
1500
1501
Processor
1502
Memory
1503
Peripheral interface
1504
Radio frequency circuit
1505
Display screen
1506
Camera assembly
1507
Audio circuit
1508
Positioning assembly
1509
Power supply
Accelerometer sensor 1511
Gyroscope sensor 1512
Pressure sensor 1513
Fingerprint sensor 1514
Optical sensor 1515
Proximity sensor 1516
Sensor 1510

FIG. 15