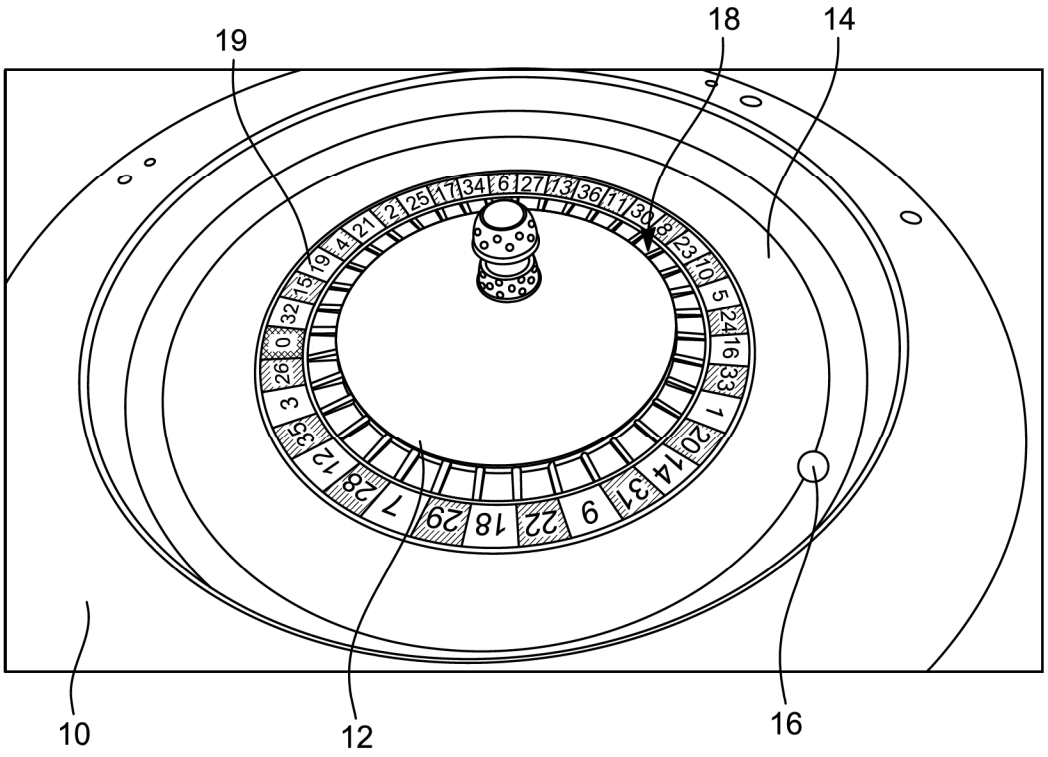
19
18
14
10
12
16
32
15
19
4
21
2
25
17
34
6
27
13
36
11
30
8
23
10
5
24
16
33
1
20
14
31
9
22
18
29
7
28
12
35
3
26
0

FIG. 1

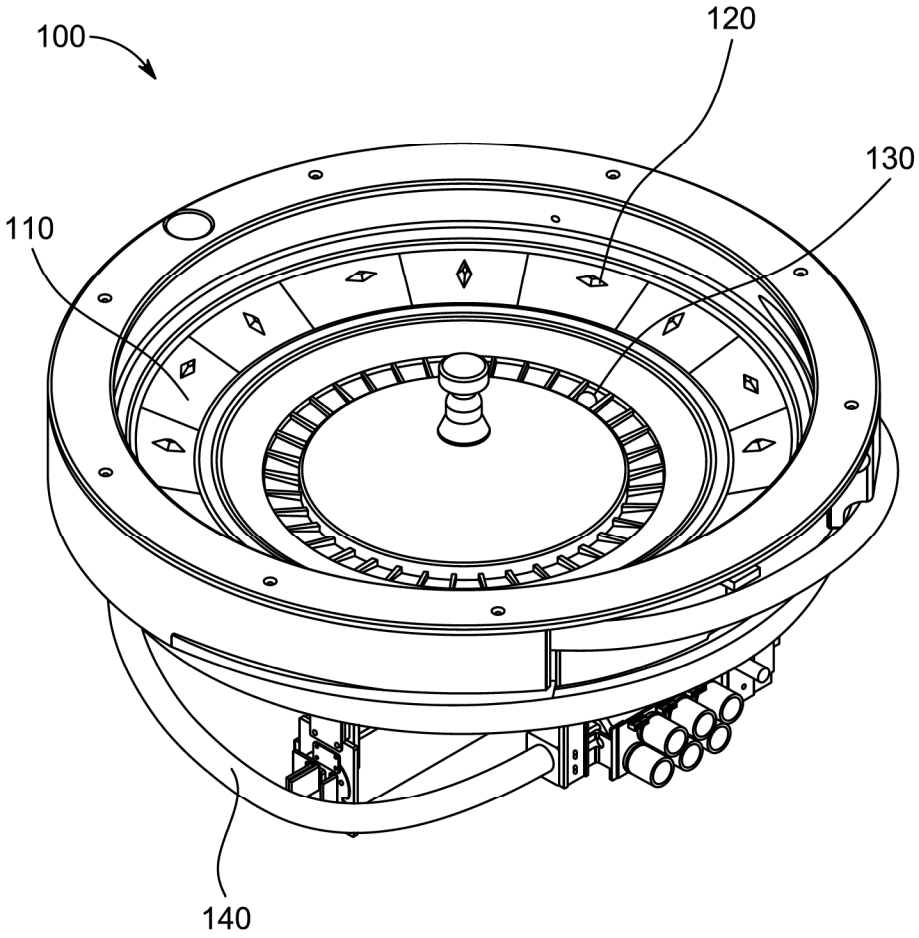

FIG. 2

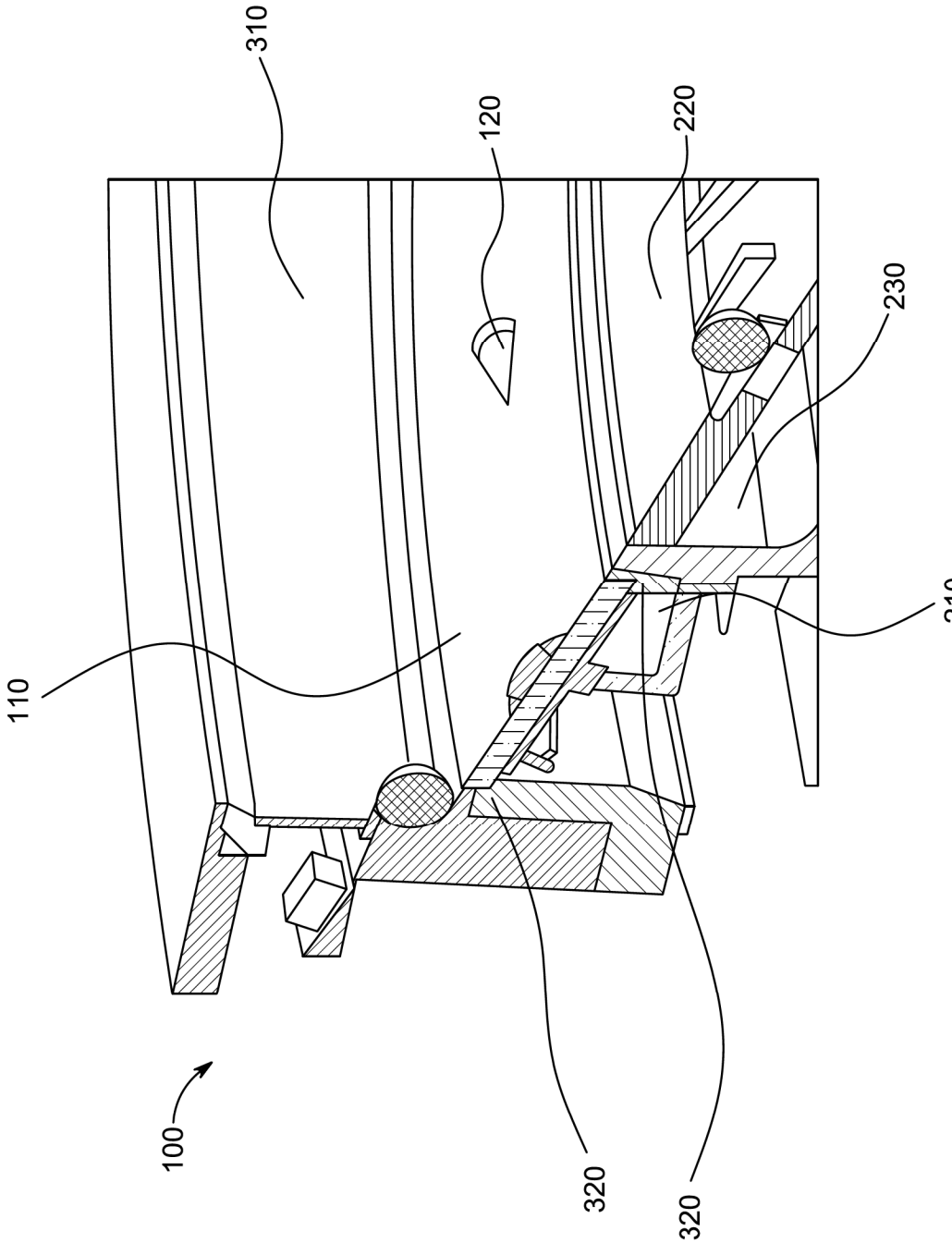

FIG. 3

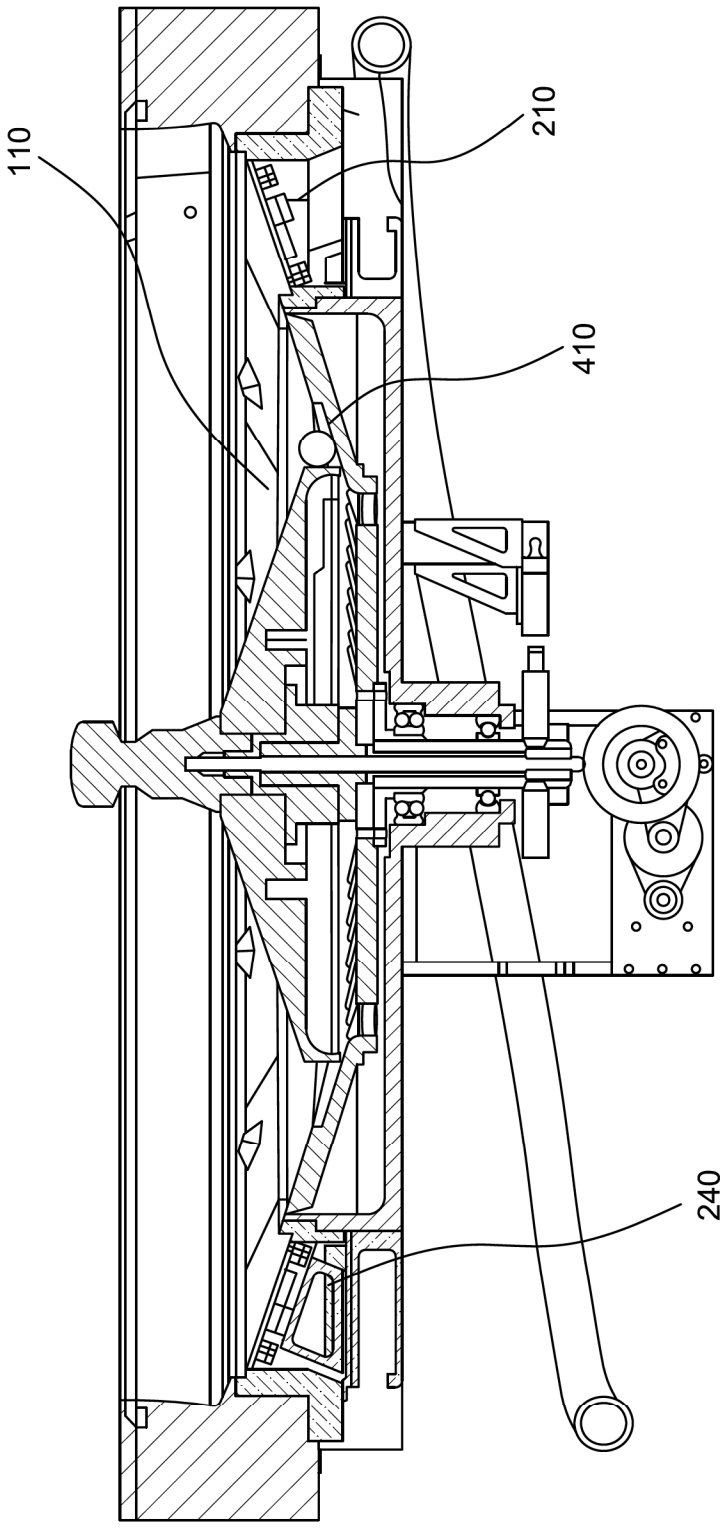

FIG. 4

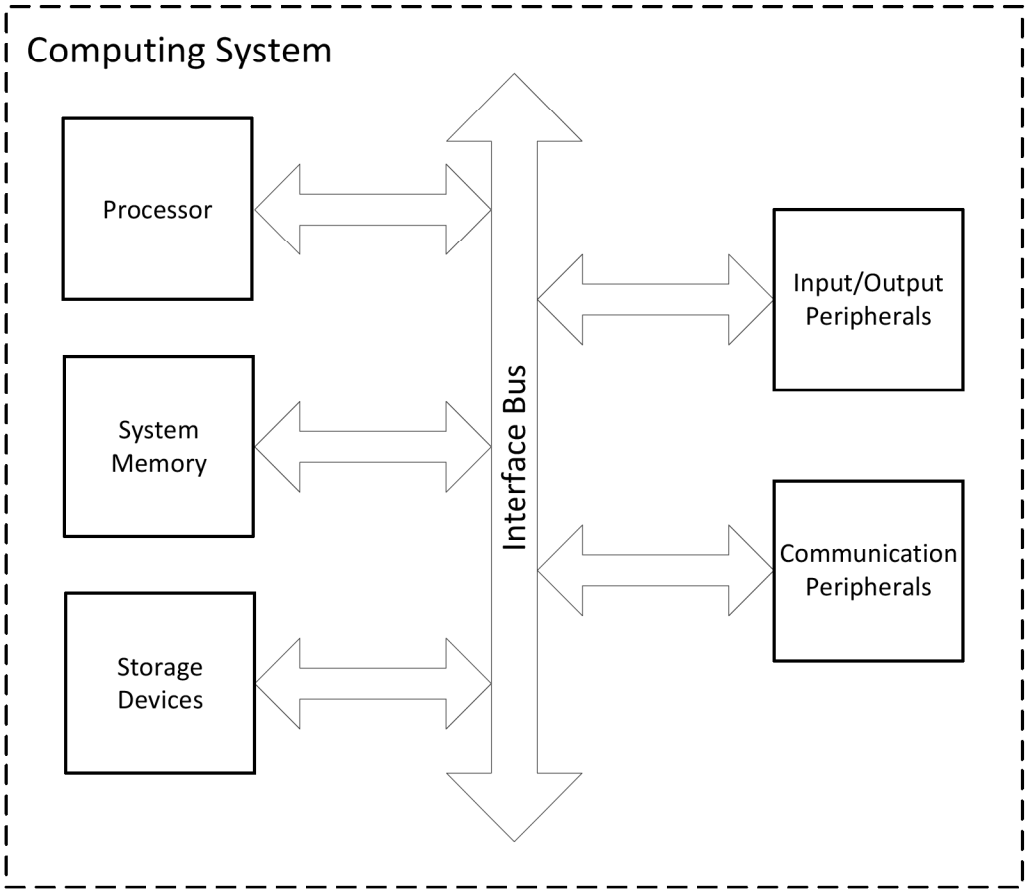
Computing System
Processor
System Memory
Storage Devices
Interface Bus
Input/Output Peripherals
Communication Peripherals

FIG. 5