[FIG. 1]

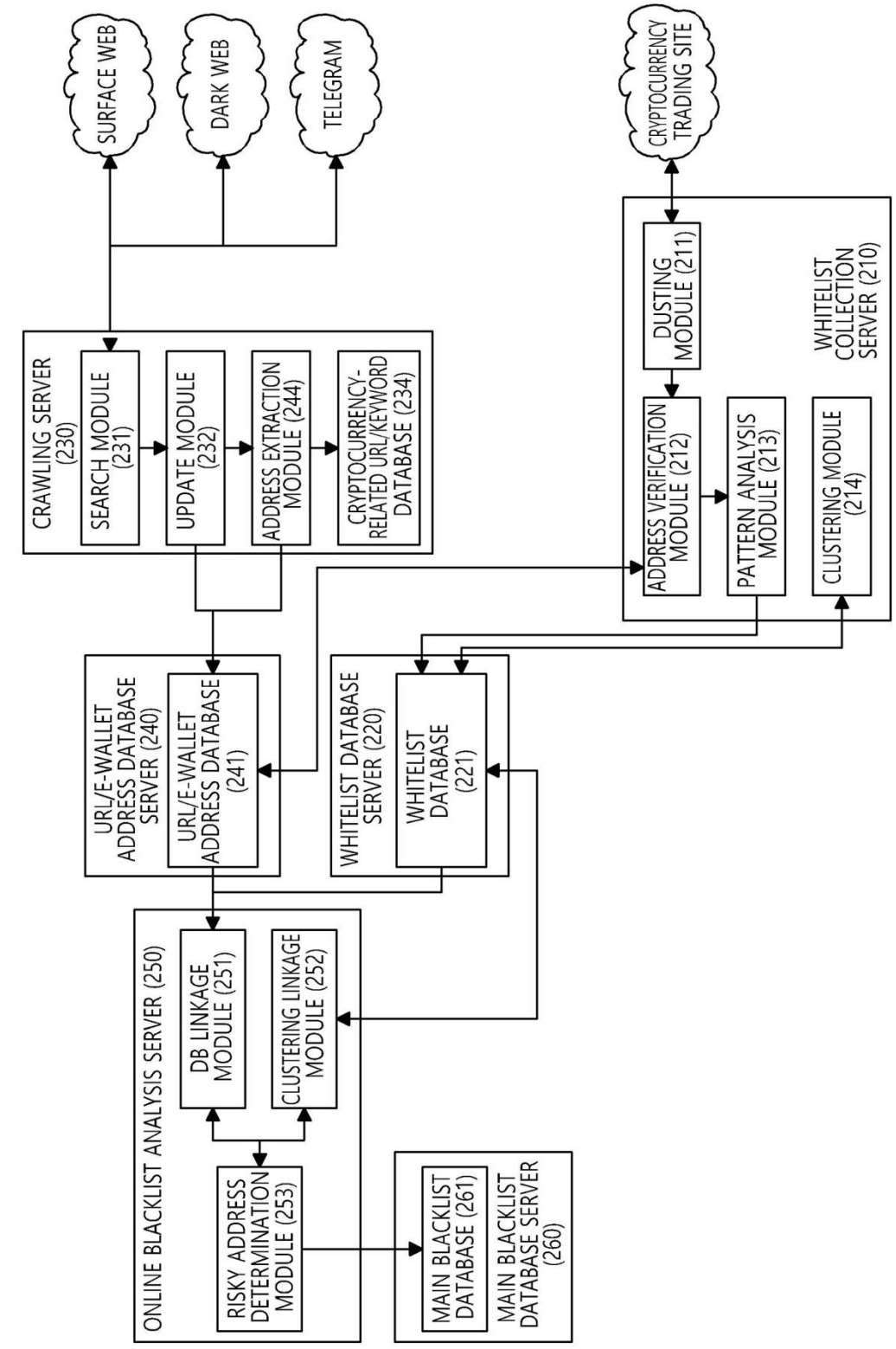
SURFACE WEB
DARK WEB
TELEGRAM
CRYPTOCURRENCY TRADING SITE
CRAWLING SERVER (230)
SEARCH MODULE (231)
UPDATE MODULE (232)
ADDRESS EXTRACTION MODULE (244)
CRYPTOCURRENCY-RELATED URL/KEYWORD DATABASE (234)
DUSTING MODULE (211)
ADDRESS VERIFICATION MODULE (212)
PATTERN ANALYSIS MODULE (213)
CLUSTERING MODULE (214)
WHITELIST COLLECTION SERVER (210)
URL/E-WALLET ADDRESS DATABASE SERVER (240)
URL/E-WALLET ADDRESS DATABASE (241)
WHITELIST DATABASE SERVER (220)
WHITELIST DATABASE (221)
ONLINE BLACKLIST ANALYSIS SERVER (250)
DB LINKAGE MODULE (251)
CLUSTERING LINKAGE MODULE (252)
RISKY ADDRESS DETERMINATION MODULE (253)
MAIN BLACKLIST DATABASE (261)
MAIN BLACKLIST DATABASE SERVER (260)

[FIG. 2]

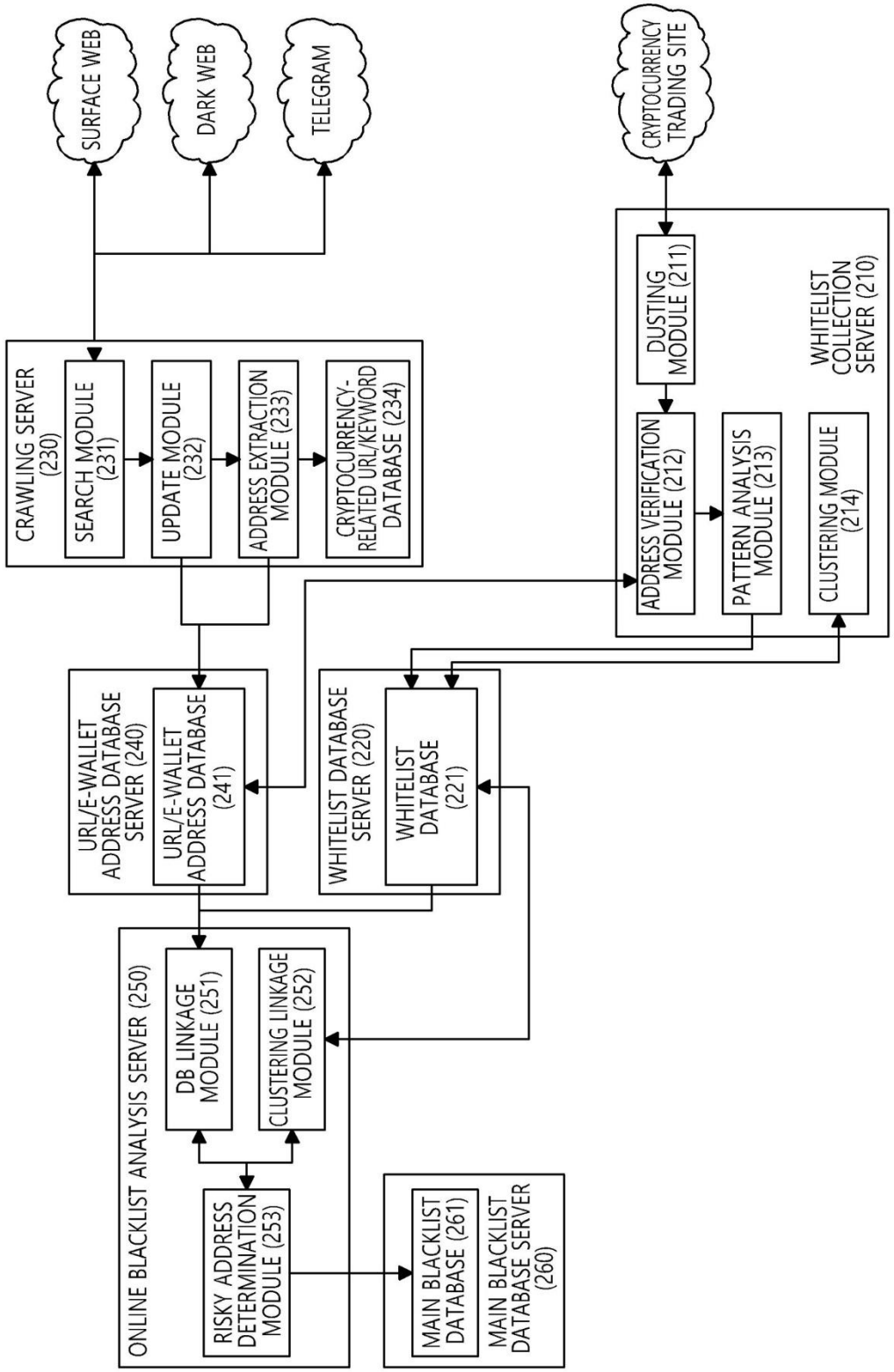
SURFACE WEB
DARK WEB
TELEGRAM
CRYPTOCURRENCY TRADING SITE
CRAWLING SERVER (230)
SEARCH MODULE (231)
UPDATE MODULE (232)
ADDRESS EXTRACTION MODULE (233)
CRYPTOCURRENCY-RELATED URL/KEYWORD DATABASE (234)
WHITELIST COLLECTION SERVER (210)
DUSTING MODULE (211)
ADDRESS VERIFICATION MODULE (212)
PATTERN ANALYSIS MODULE (213)
CLUSTERING MODULE (214)
URL/E-WALLET ADDRESS DATABASE SERVER (240)
URL/E-WALLET ADDRESS DATABASE (241)
WHITELIST DATABASE SERVER (220)
WHITELIST DATABASE (221)
ONLINE BLACKLIST ANALYSIS SERVER (250)
DB LINKAGE MODULE (251)
CLUSTERING LINKAGE MODULE (252)
RISKY ADDRESS DETERMINATION MODULE (253)
MAIN BLACKLIST DATABASE SERVER (260)
MAIN BLACKLIST DATABASE (261)

[FIG. 3]

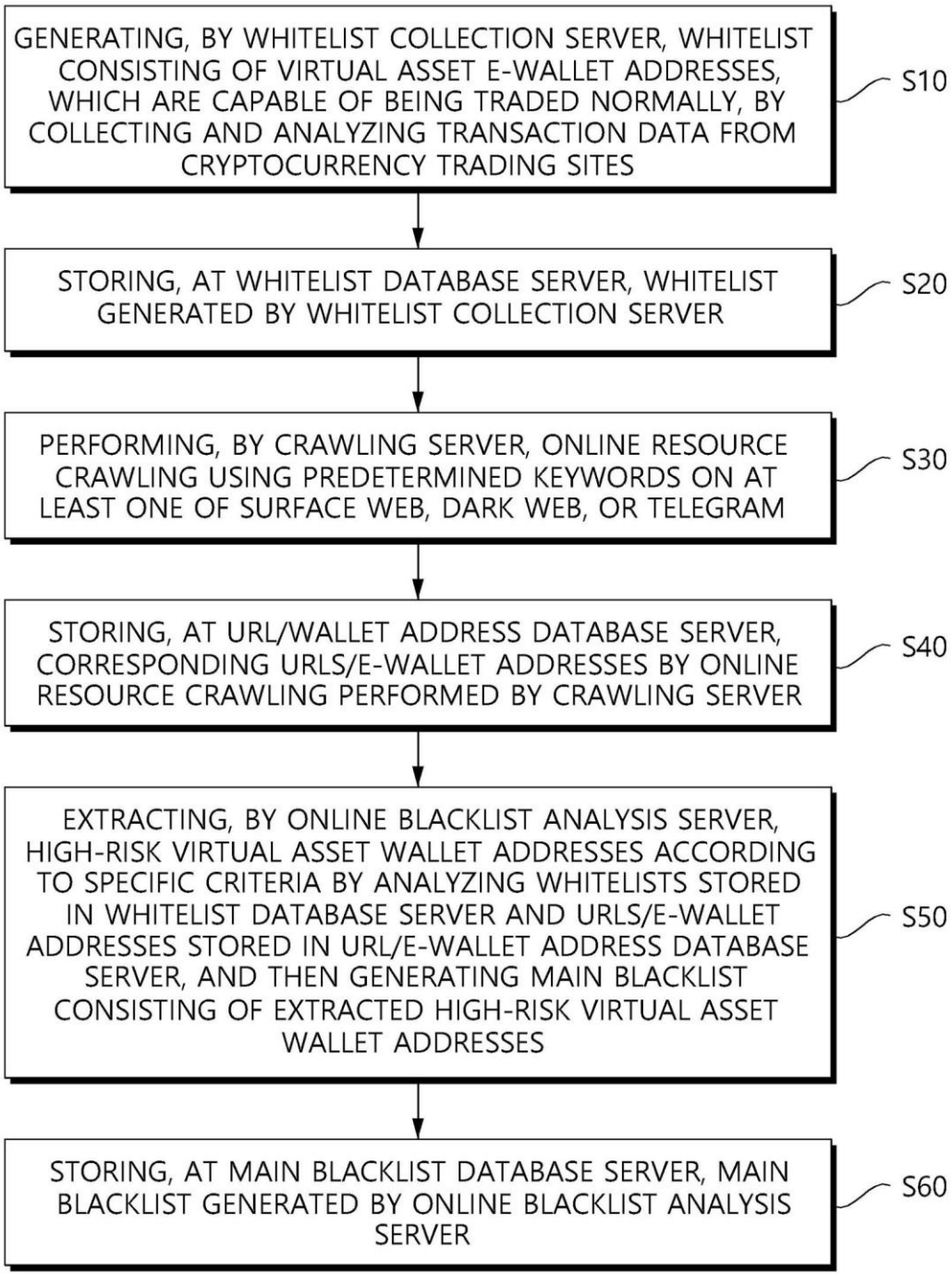
GENERATING, BY WHITELIST COLLECTION SERVER, WHITELIST CONSISTING OF VIRTUAL ASSET E-WALLET ADDRESSES, WHICH ARE CAPABLE OF BEING TRADED NORMALLY, BY COLLECTING AND ANALYZING TRANSACTION DATA FROM CRYPTOCURRENCY TRADING SITES
S10
STORING, AT WHITELIST DATABASE SERVER, WHITELIST GENERATED BY WHITELIST COLLECTION SERVER
S20
PERFORMING, BY CRAWLING SERVER, ONLINE RESOURCE CRAWLING USING PREDETERMINED KEYWORDS ON AT LEAST ONE OF SURFACE WEB, DARK WEB, OR TELEGRAM
S30
STORING, AT URL/WALLET ADDRESS DATABASE SERVER, CORRESPONDING URLS/E-WALLET ADDRESSES BY ONLINE RESOURCE CRAWLING PERFORMED BY CRAWLING SERVER
S40
EXTRACTING, BY ONLINE BLACKLIST ANALYSIS SERVER, HIGH-RISK VIRTUAL ASSET WALLET ADDRESSES ACCORDING TO SPECIFIC CRITERIA BY ANALYZING WHITELISTS STORED IN WHITELIST DATABASE SERVER AND URLS/E-WALLET ADDRESSES STORED IN URL/E-WALLET ADDRESS DATABASE SERVER, AND THEN GENERATING MAIN BLACKLIST CONSISTING OF EXTRACTED HIGH-RISK VIRTUAL ASSET WALLET ADDRESSES
S50
STORING, AT MAIN BLACKLIST DATABASE SERVER, MAIN BLACKLIST GENERATED BY ONLINE BLACKLIST ANALYSIS SERVER
S60

[FIG. 4]

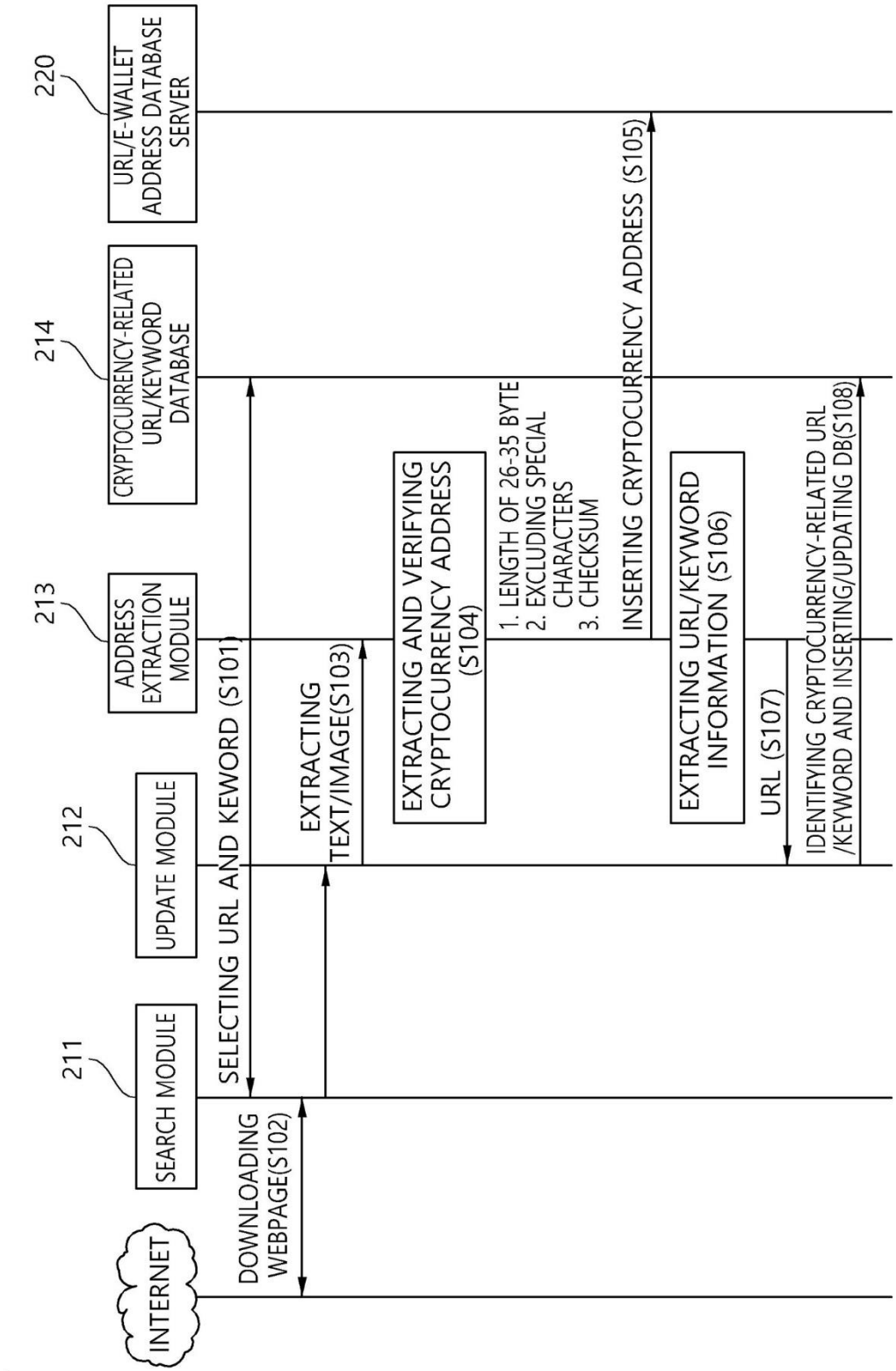
INTERNET
211
SEARCH MODULE
212
UPDATE MODULE
213
ADDRESS EXTRACTION MODULE
214
CRYPTOCURRENCY-RELATED URL/KEYWORD DATABASE
220
URL/E-WALLET ADDRESS DATABASE SERVER
DOWNLOADING WEBPAGE(S102)
SELECTING URL AND KEWORD (S101)
EXTRACTING TEXT/IMAGE(S103)
EXTRACTING AND VERIFYING CRYPTOCURRENCY ADDRESS (S104)
1. LENGTH OF 26-35 BYTE
2. EXCLUDING SPECIAL CHARACTERS
3. CHECKSUM
INSERTING CRYPTOCURRENCY ADDRESS (S105)
EXTRACTING URL/KEYWORD INFORMATION (S106)
URL (S107)
IDENTIFYING CRYPTOCURRENCY-RELATED URL /KEYWORD AND INSERTING/UPDATING DB(S108)

[FIG. 5]

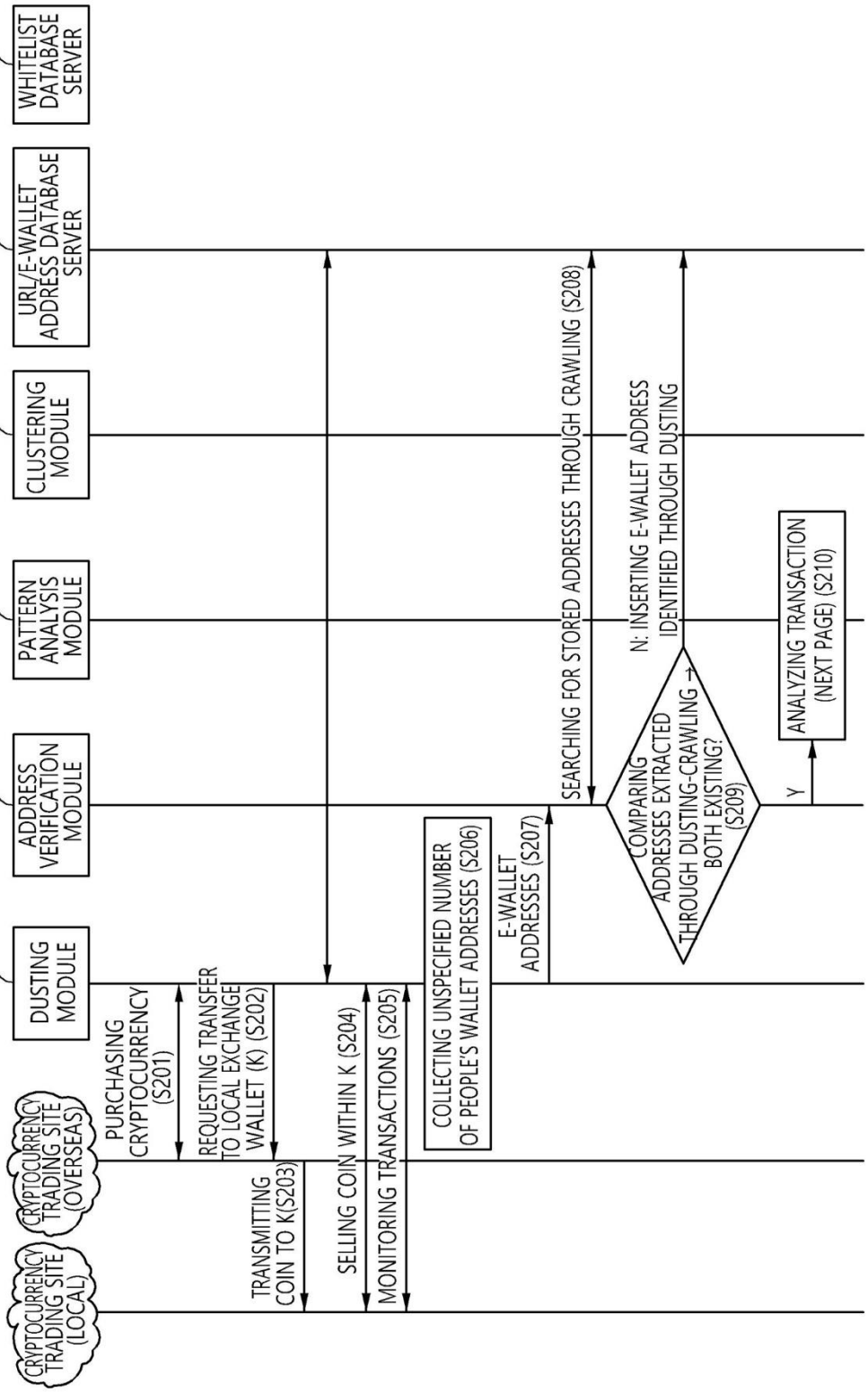
231
DUSTING MODULE
232
ADDRESS VERIFICATION MODULE
233
PATTERN ANALYSIS MODULE
234
CLUSTERING MODULE
220
URL/E-WALLET ADDRESS DATABASE SERVER
240
WHITELIST DATABASE SERVER
CRYPTOCURRENCY TRADING SITE (OVERSEAS)
CRYPTOCURRENCY TRADING SITE (LOCAL)
PURCHASING CRYPTOCURRENCY (S201)
REQUESTING TRANSFER TO LOCAL EXCHANGE WALLET (K) (S202)
TRANSMITTING COIN TO K(S203)
SELLING COIN WITHIN K (S204)
MONITORING TRANSACTIONS (S205)
COLLECTING UNSPECIFIED NUMBER OF PEOPLE'S WALLET ADDRESSES (S206)
E-WALLET ADDRESSES (S207)
SEARCHING FOR STORED ADDRESSES THROUGH CRAWLING (S208)
COMPARING ADDRESSES EXTRACTED THROUGH DUSTING-CRAWLING → BOTH EXISTING? (S209)
N: INSERTING E-WALLET ADDRESS IDENTIFIED THROUGH DUSTING
Y
ANALYZING TRANSACTION (NEXT PAGE) (S210)

[FIG. 6]

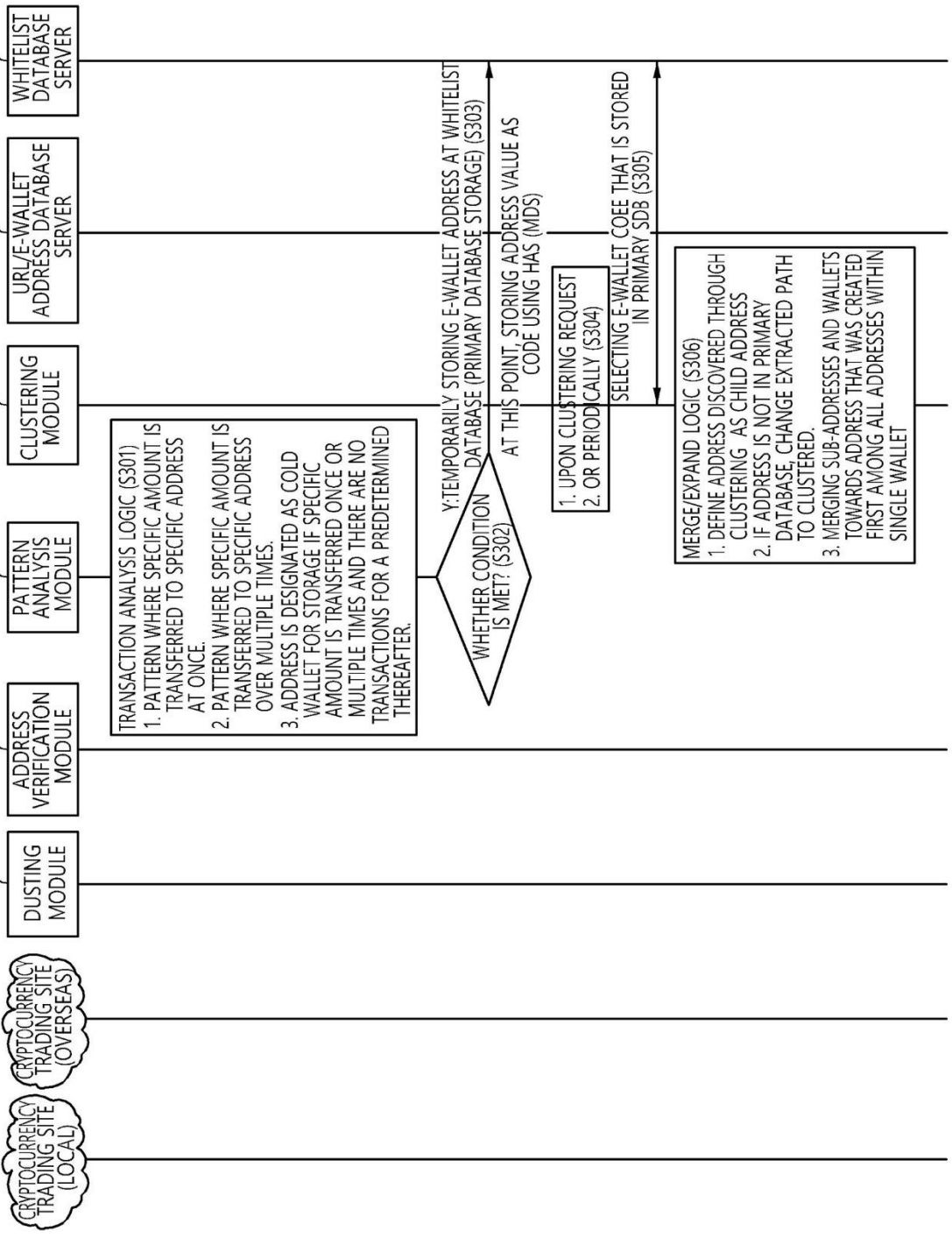
CRYPTOCURRENCY TRADING SITE (LOCAL)
CRYPTOCURRENCY TRADING SITE (OVERSEAS)
231
DUSTING MODULE
232
ADDRESS VERIFICATION MODULE
233
PATTERN ANALYSIS MODULE
234
CLUSTERING MODULE
220
URL/E-WALLET ADDRESS DATABASE SERVER
240
WHITELIST DATABASE SERVER
TRANSACTION ANALYSIS LOGIC (S301)
1. PATTERN WHERE SPECIFIC AMOUNT IS TRANSFERRED TO SPECIFIC ADDRESS AT ONCE.
2. PATTERN WHERE SPECIFIC AMOUNT IS TRANSFERRED TO SPECIFIC ADDRESS OVER MULTIPLE TIMES.
3. ADDRESS IS DESIGNATED AS COLD WALLET FOR STORAGE IF SPECIFIC AMOUNT IS TRANSFERRED ONCE OR MULTIPLE TIMES AND THERE ARE NO TRANSACTIONS FOR A PREDETERMINED THEREAFTER.
WHETHER CONDITION IS MET? (S302)
Y:TEMPORARILY STORING E-WALLET ADDRESS AT WHITELIST DATABASE (PRIMARY DATABASE STORAGE) (S303)
AT THIS POINT, STORING ADDRESS VALUE AS CODE USING HAS (MDS)
1. UPON CLUSTERING REQUEST
2. OR PERIODICALLY (S304)
SELECTING E-WALLET COEE THAT IS STORED IN PRIMARY SDB (S305)
MERGE/EXPAND LOGIC (S306)
1. DEFINE ADDRESS DISCOVERED THROUGH CLUSTERING AS CHILD ADDRESS
2. IF ADDRESS IS NOT IN PRIMARY DATABASE, CHANGE EXTRACTED PATH TO CLUSTERED.
3. MERGING SUB-ADDRESSES AND WALLETS TOWARDS ADDRESS THAT WAS CREATED FIRST AMONG ALL ADDRESSES WITHIN SINGLE WALLET

[FIG. 7]

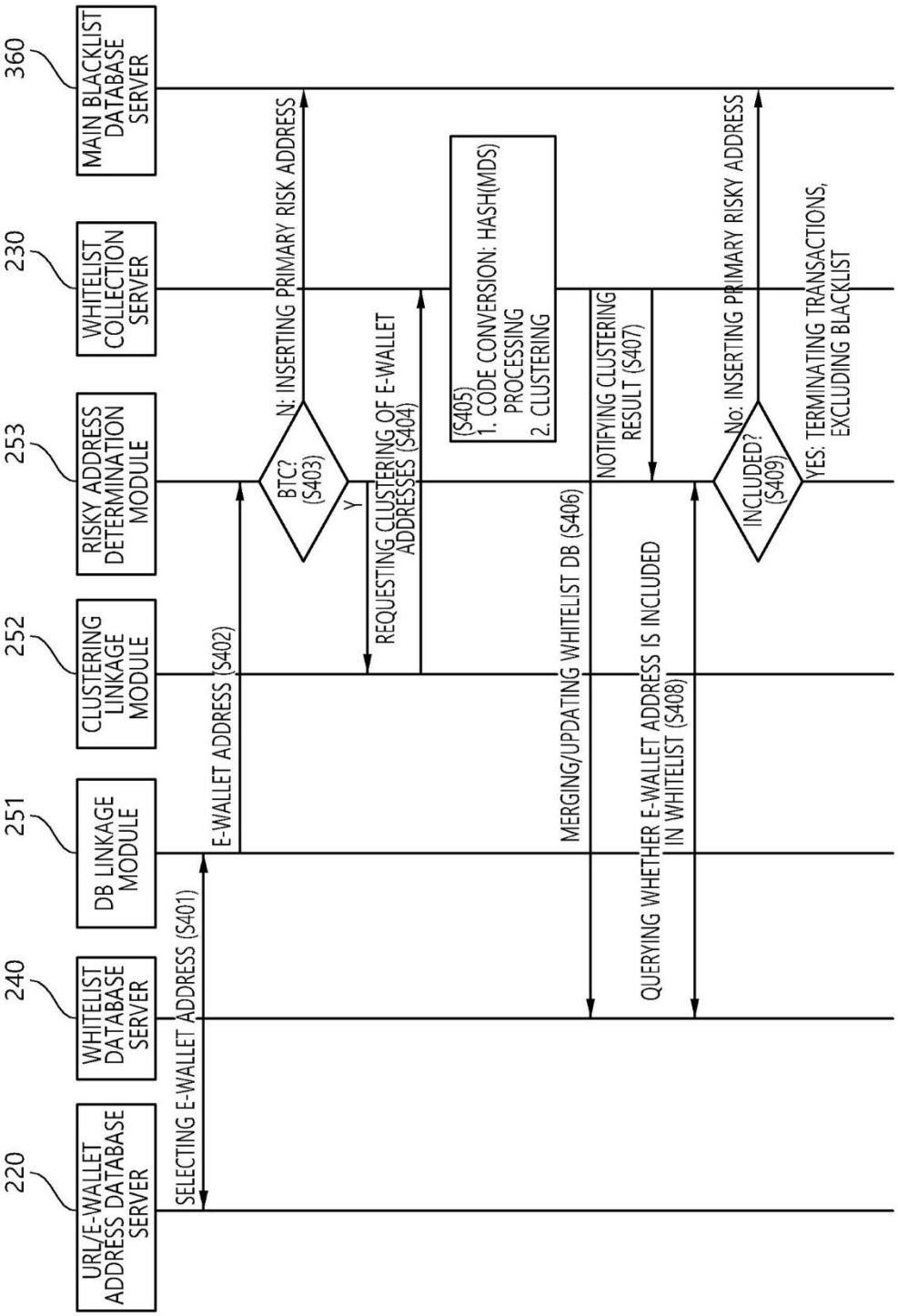
220
URL/E-WALLET ADDRESS DATABASE SERVER
240
WHITELIST DATABASE SERVER
251
DB LINKAGE MODULE
252
CLUSTERING LINKAGE MODULE
253
RISKY ADDRESS DETERMINATION MODULE
230
WHITELIST COLLECTION SERVER
360
MAIN BLACKLIST DATABASE SERVER
SELECTING E-WALLET ADDRESS (S401)
E-WALLET ADDRESS (S402)
BTC? (S403)
N: INSERTING PRIMARY RISK ADDRESS
Y
REQUESTING CLUSTERING OF E-WALLET ADDRESSES (S404)
(S405)
1. CODE CONVERSION: HASH(MDS) PROCESSING
2. CLUSTERING
MERGING/UPDATING WHITELIST DB (S406)
NOTIFYING CLUSTERING RESULT (S407)
QUERYING WHETHER E-WALLET ADDRESS IS INCLUDED IN WHITELIST (S408)
INCLUDED? (S409)
No: INSERTING PRIMARY RISKY ADDRESS
YES: TERMINATING TRANSACTIONS, EXCLUDING BLACKLIST