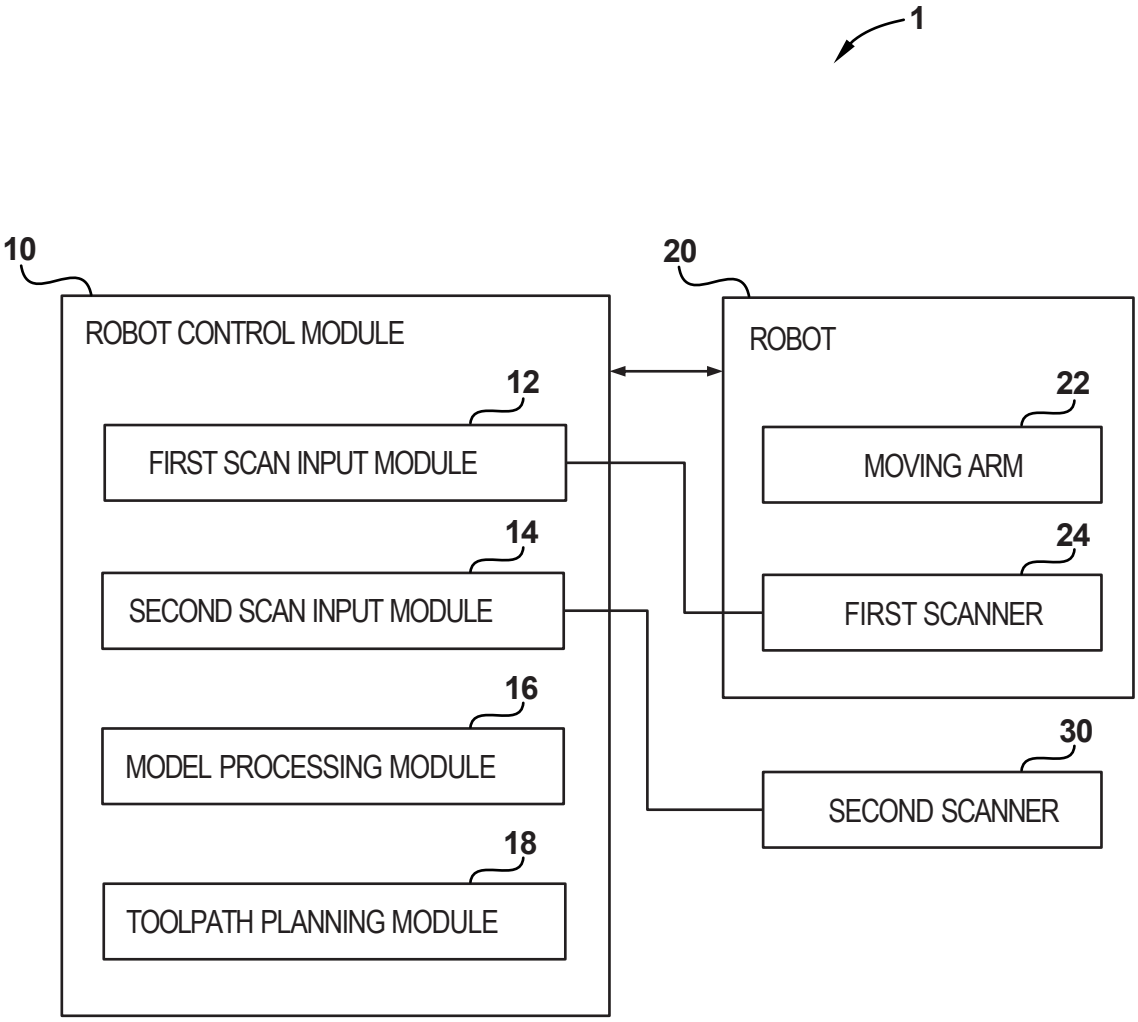
1
10
ROBOT CONTROL MODULE
12
FIRST SCAN INPUT MODULE
14
SECOND SCAN INPUT MODULE
16
MODEL PROCESSING MODULE
18
TOOLPATH PLANNING MODULE
20
ROBOT
22
MOVING ARM
24
FIRST SCANNER
30
SECOND SCANNER

FIG. 1

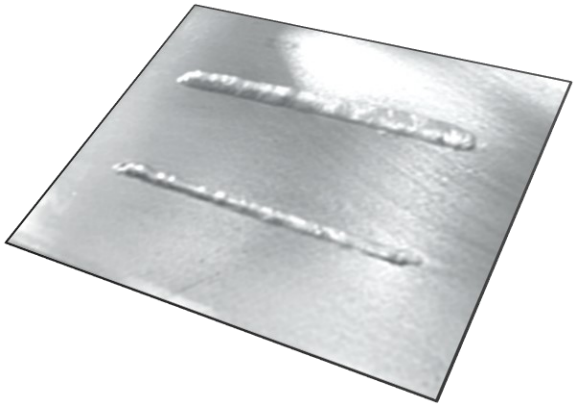

FIG. 2A

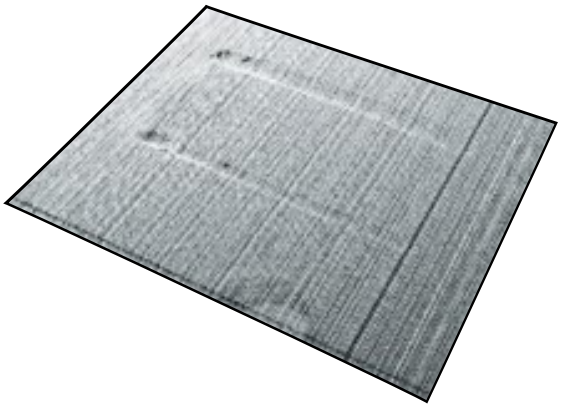

FIG. 2B

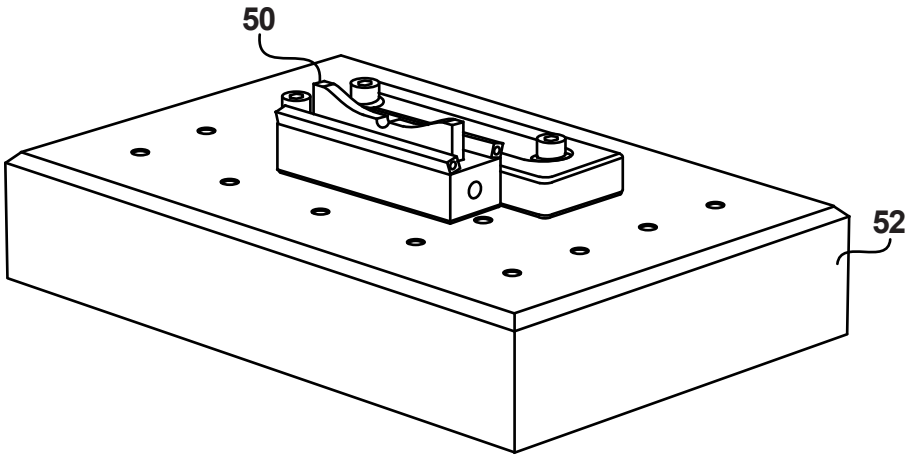

FIG. 3A

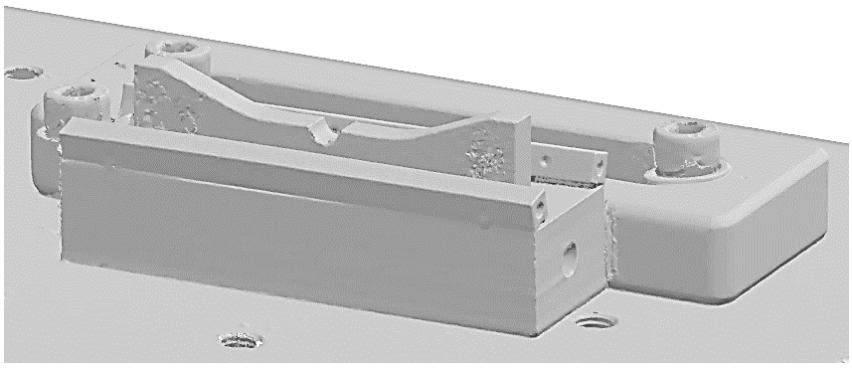

FIG. 3B

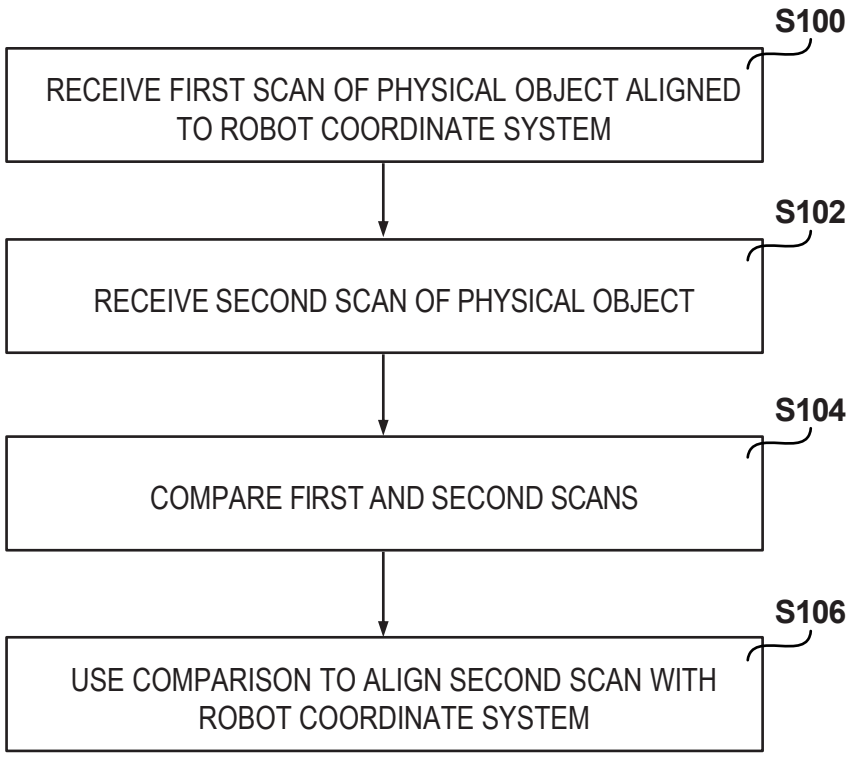
S100
RECEIVE FIRST SCAN OF PHYSICAL OBJECT ALIGNED TO ROBOT COORDINATE SYSTEM
S102
RECEIVE SECOND SCAN OF PHYSICAL OBJECT
S104
COMPARE FIRST AND SECOND SCANS
S106
USE COMPARISON TO ALIGN SECOND SCAN WITH ROBOT COORDINATE SYSTEM

FIG. 4

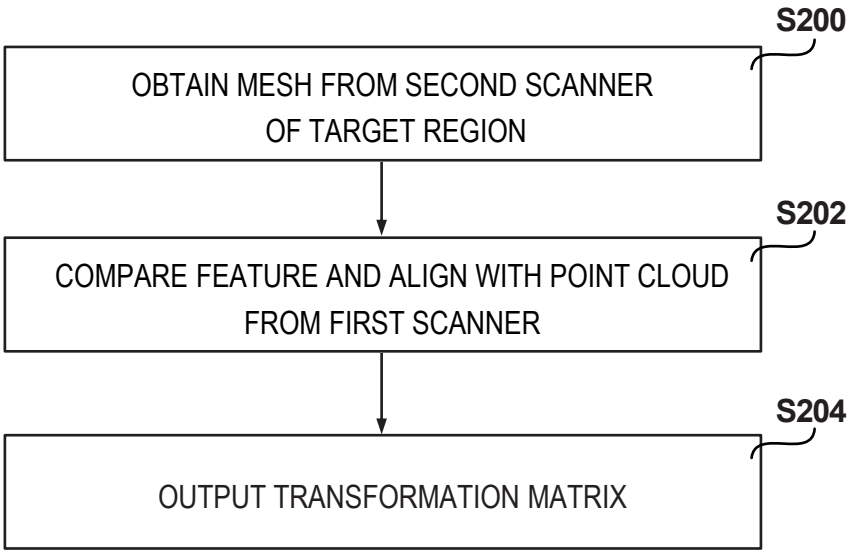
S200
OBTAIN MESH FROM SECOND SCANNER OF TARGET REGION
S202
COMPARE FEATURE AND ALIGN WITH POINT CLOUD FROM FIRST SCANNER
S204
OUTPUT TRANSFORMATION MATRIX

FIG. 5

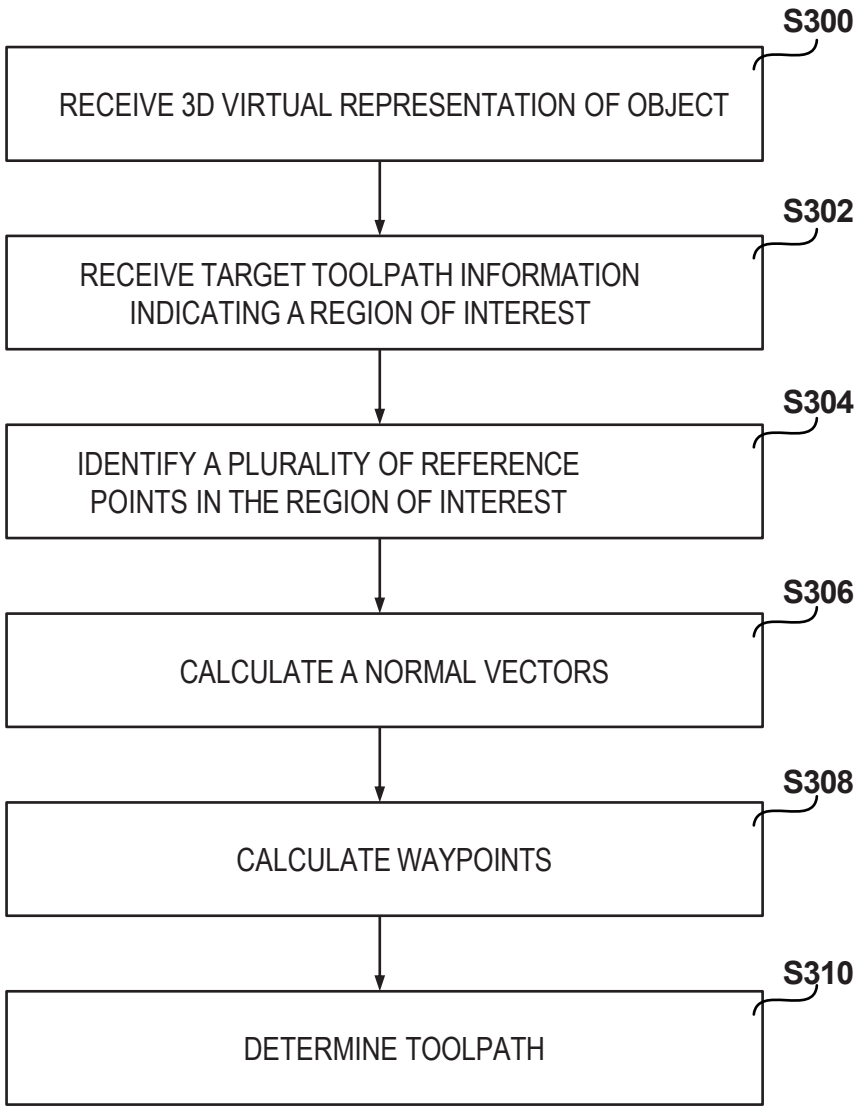
S300
RECEIVE 3D VIRTUAL REPRESENTATION OF OBJECT
S302
RECEIVE TARGET TOOLPATH INFORMATION INDICATING A REGION OF INTEREST
S304
IDENTIFY A PLURALITY OF REFERENCE POINTS IN THE REGION OF INTEREST
S306
CALCULATE A NORMAL VECTORS
S308
CALCULATE WAYPOINTS
S310
DETERMINE TOOLPATH

FIG. 6

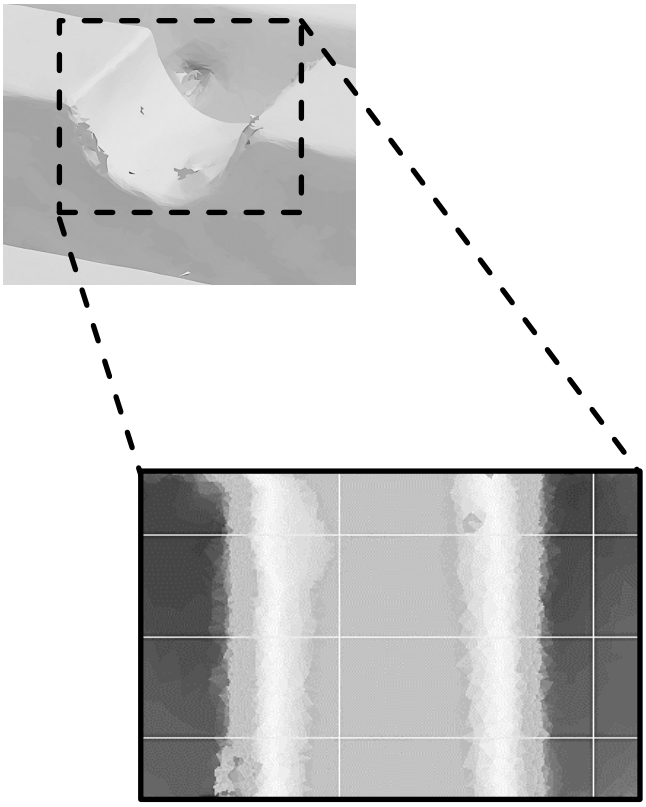

FIG. 7

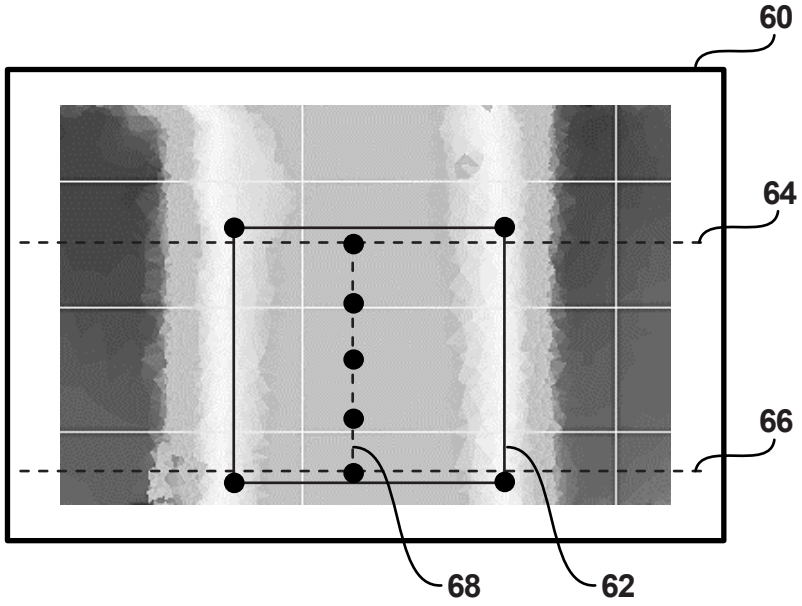

FIG. 8

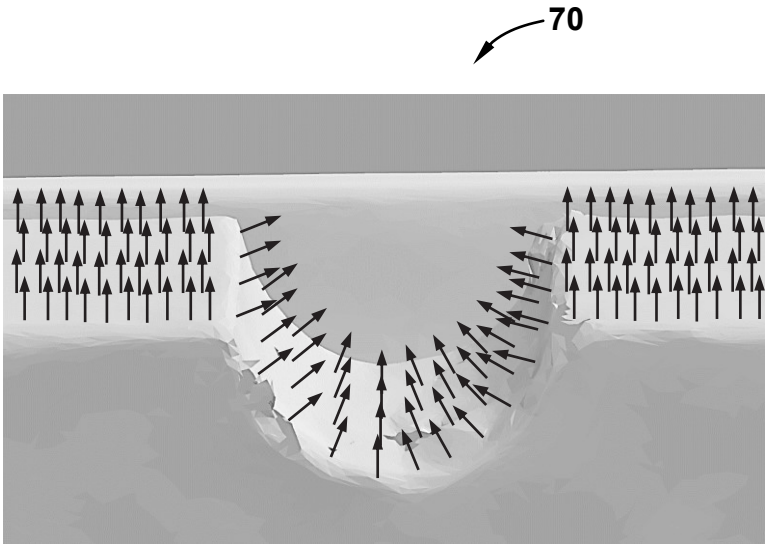

FIG. 9A

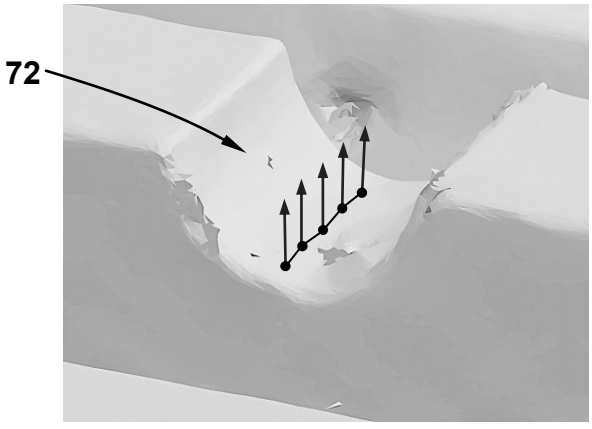

FIG. 9B

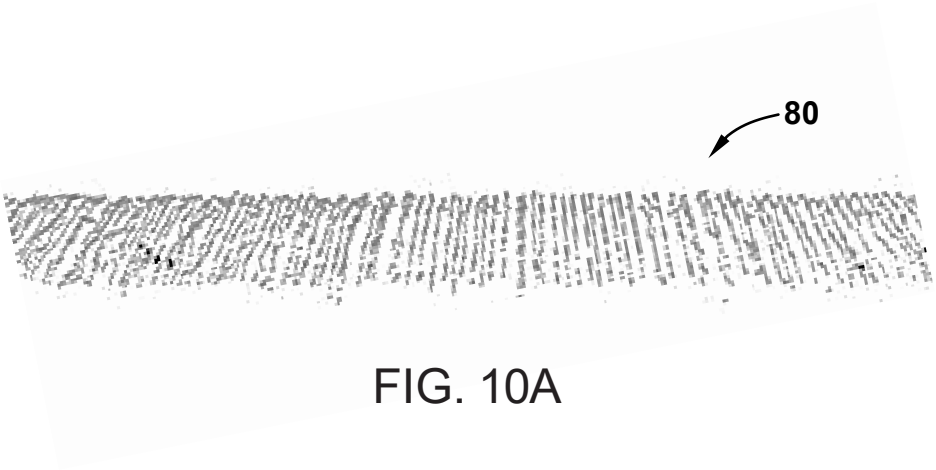

FIG. 10A

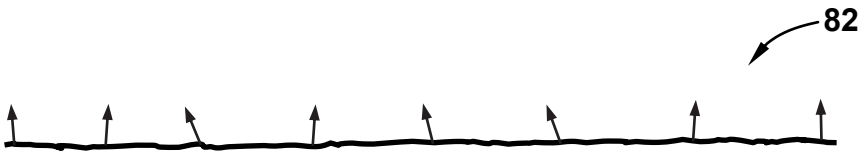

FIG. 10B

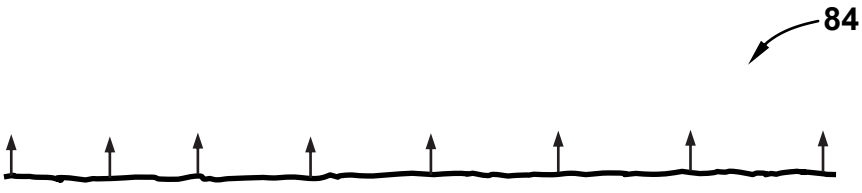

FIG. 10C

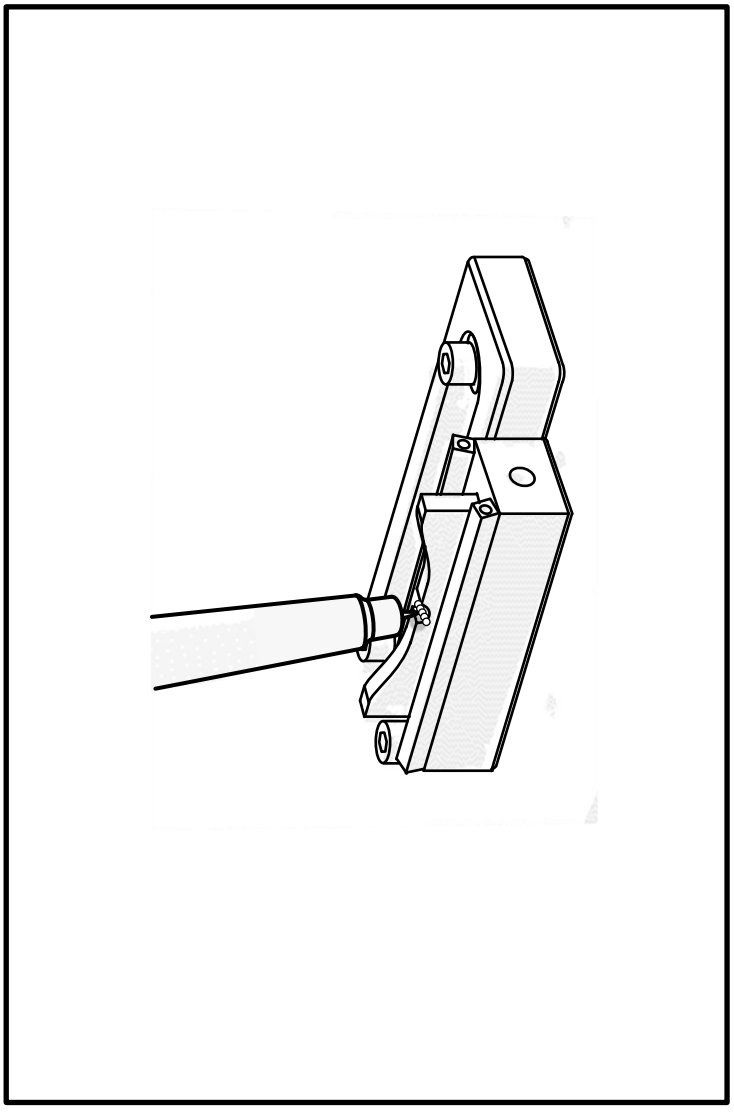

FIG. 11

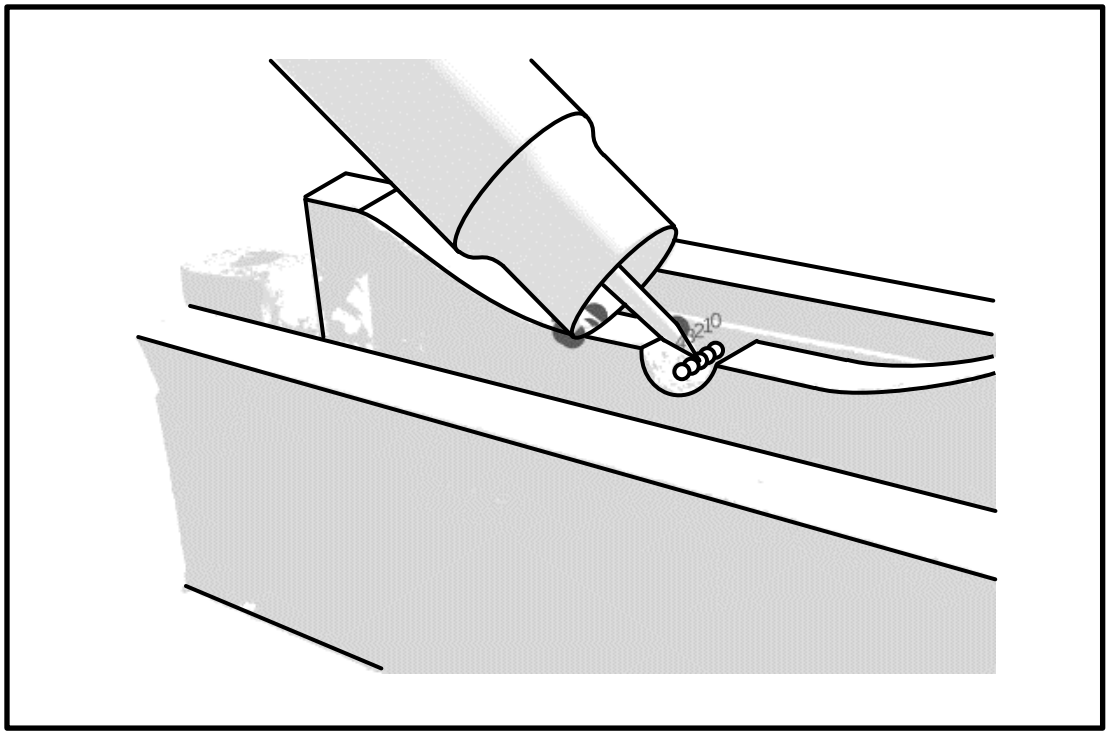

FIG. 12A

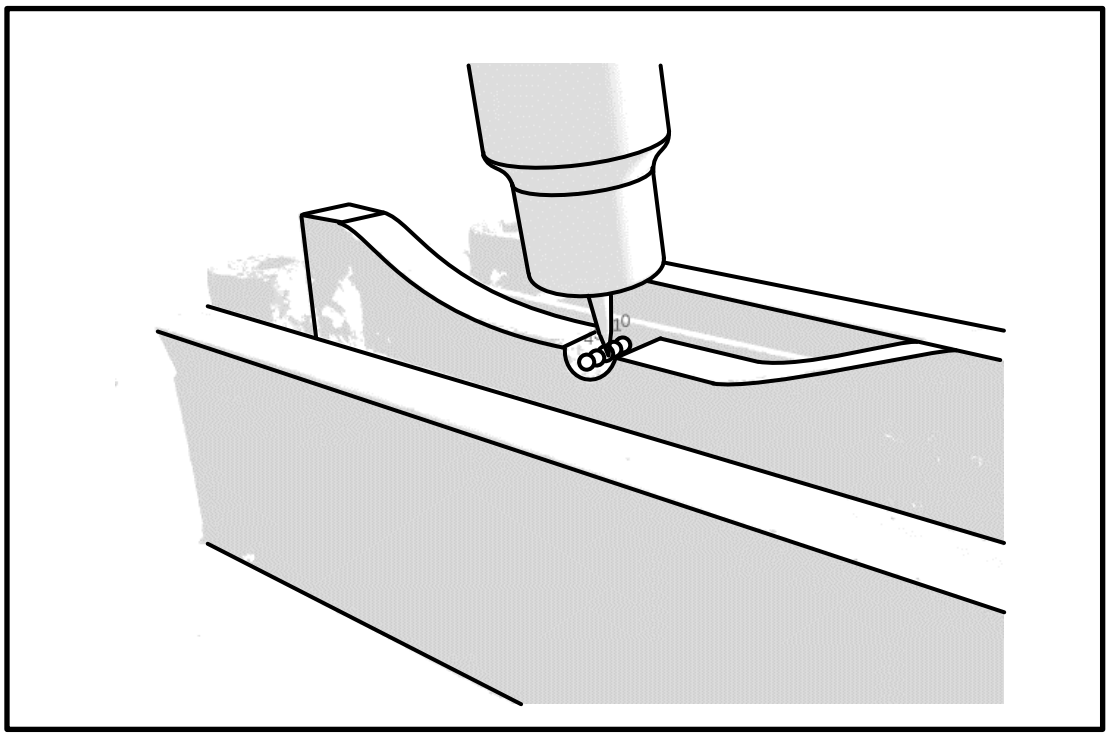

FIG. 12B

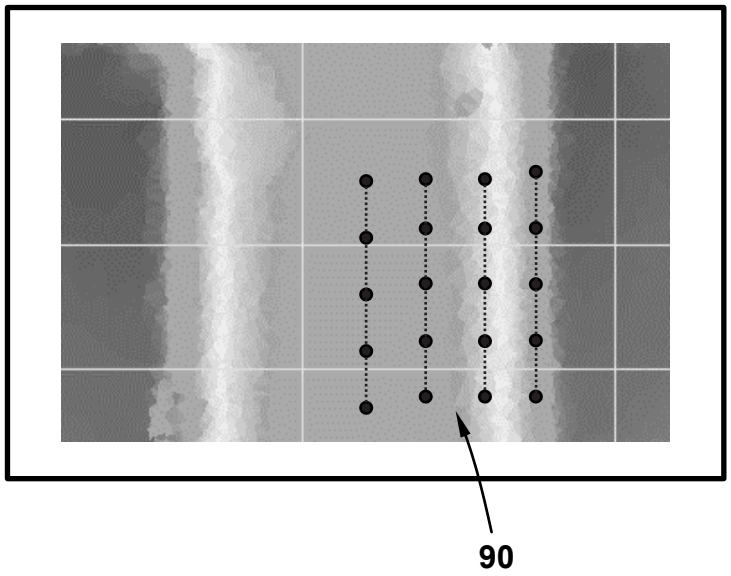

FIG. 13

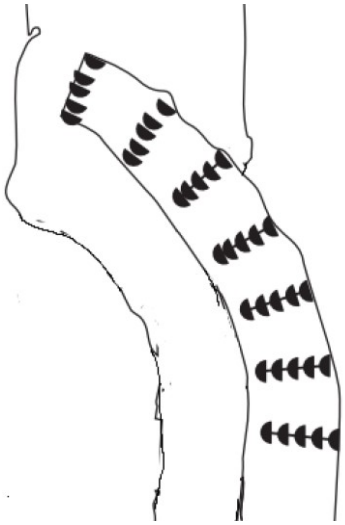

FIG. 14B

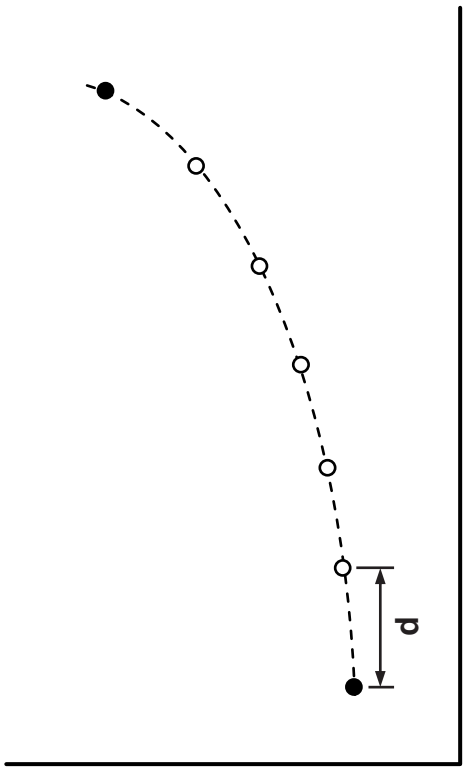

FIG. 14A

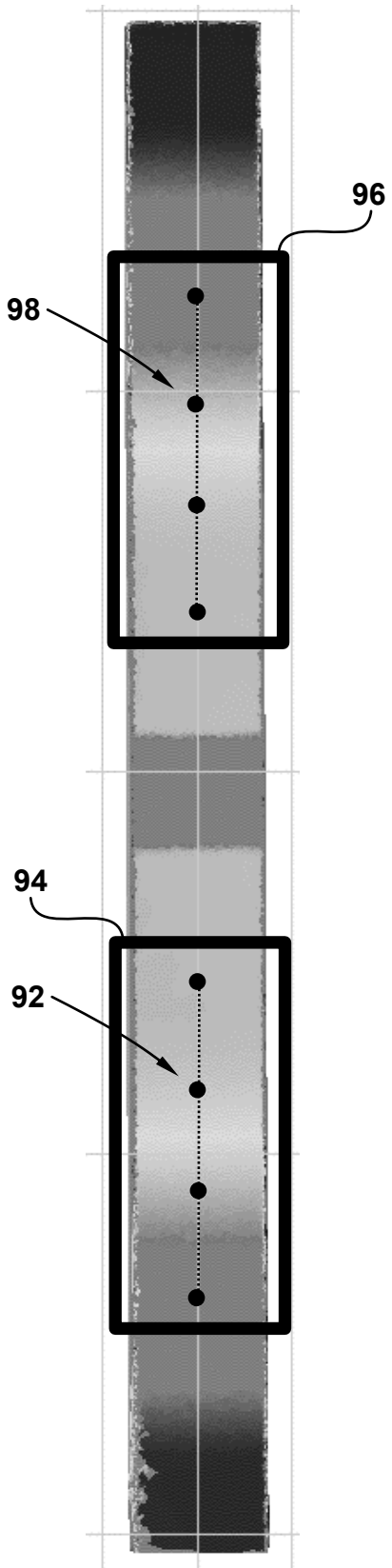

FIG. 15

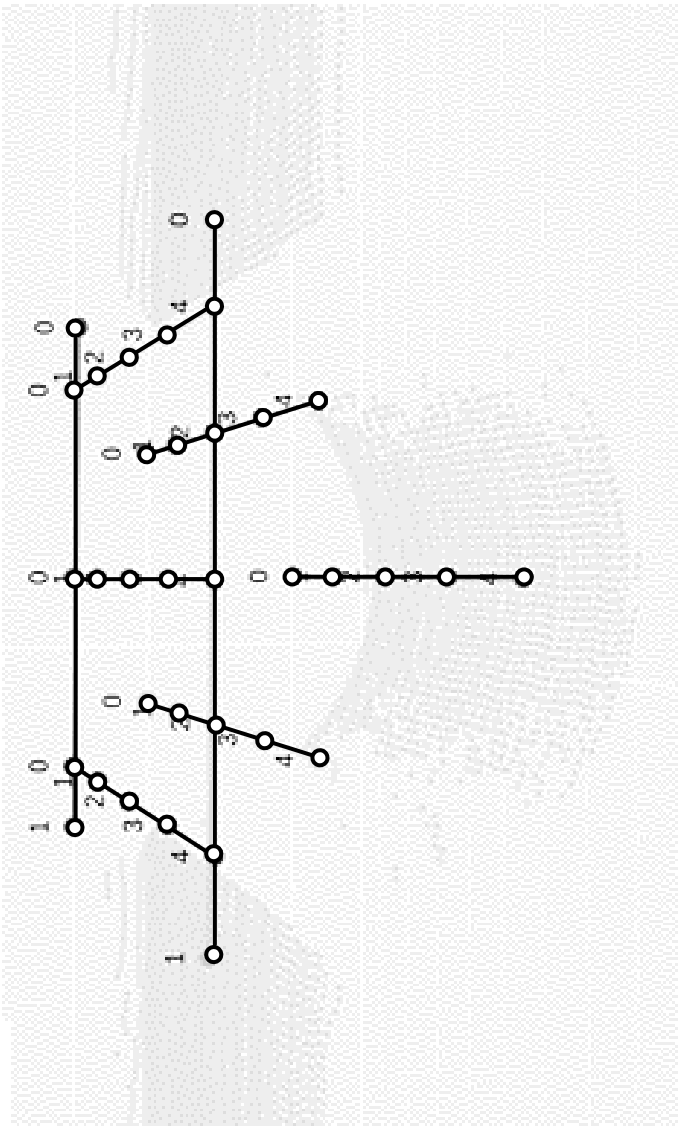

FIG. 16