FIG.4

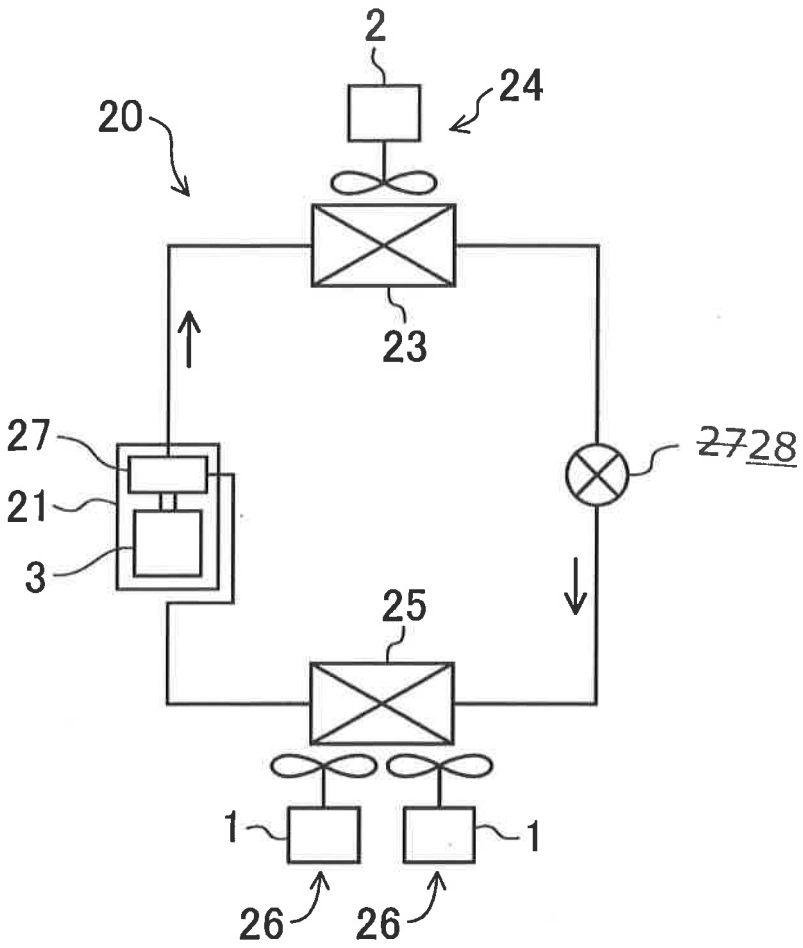

FIG.5

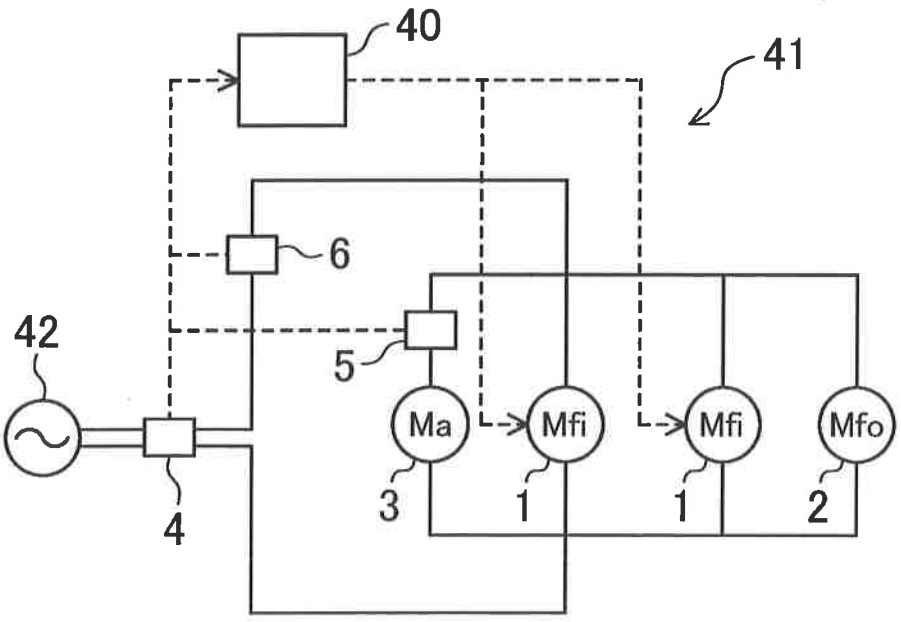

FIG.6

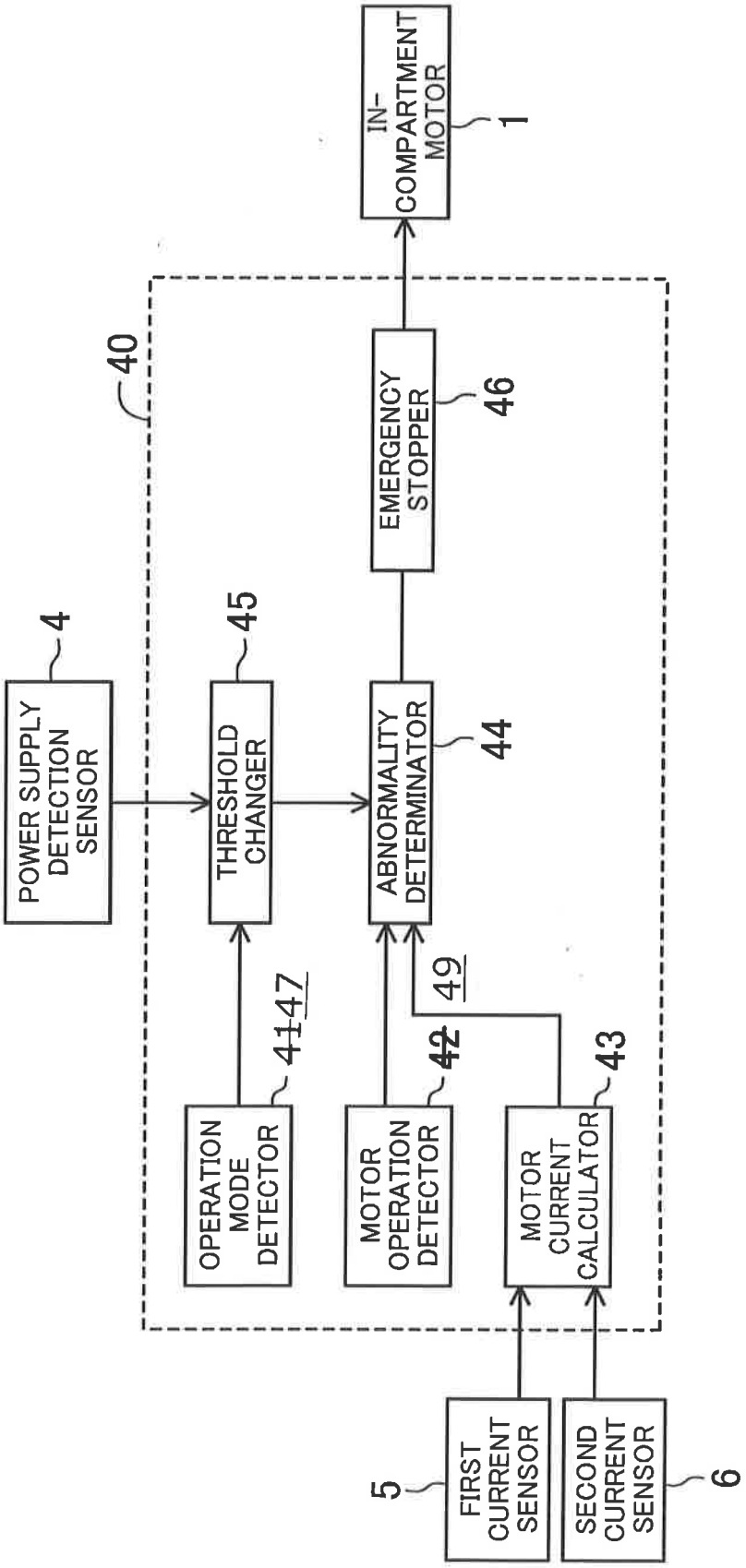
IN-COMPARTMENT MOTOR
1
40
EMERGENCY STOPPER
46
POWER SUPPLY DETECTION SENSOR
4
THRESHOLD CHANGER
45
ABNORMALITY DETERMINATOR
44
49
OPERATION MODE DETECTOR
4147
MOTOR OPERATION DETECTOR
42
MOTOR CURRENT CALCULATOR
43
5
FIRST CURRENT SENSOR
SECOND CURRENT SENSOR
6