FIG. 1

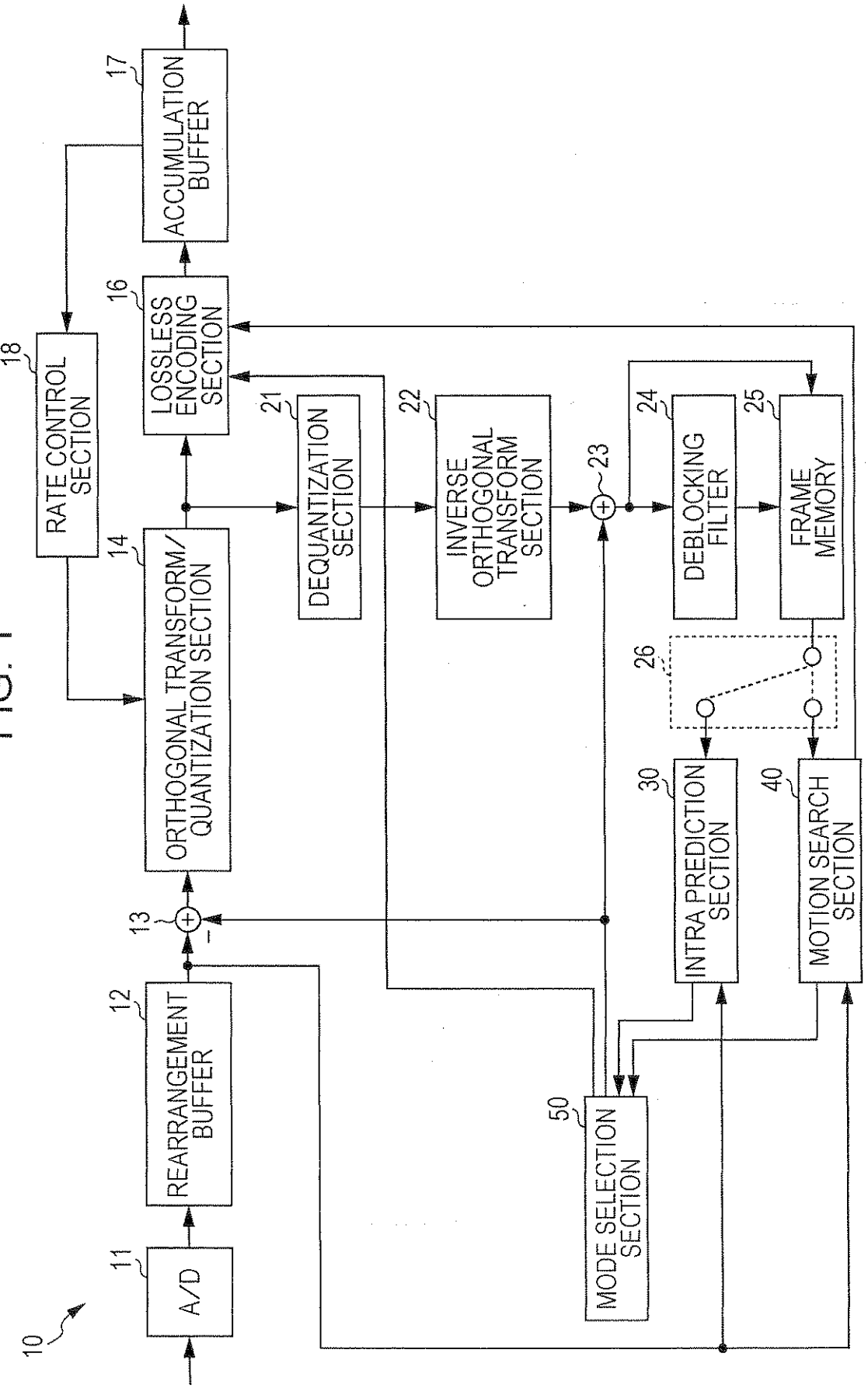
10
A/D
11
REARRANGEMENT BUFFER
12
13
ORTHOGONAL TRANSFORM/ QUANTIZATION SECTION
14
RATE CONTROL SECTION
18
LOSSLESS ENCODING SECTION
16
ACCUMULATION BUFFER
17
DEQUANTIZATION SECTION
21
INVERSE ORTHOGONAL TRANSFORM SECTION
22
23
DEBLOCKING FILTER
24
FRAME MEMORY
25
26
INTRA PREDICTION SECTION
30
MOTION SEARCH SECTION
40
MODE SELECTION SECTION
50

FIG. 2

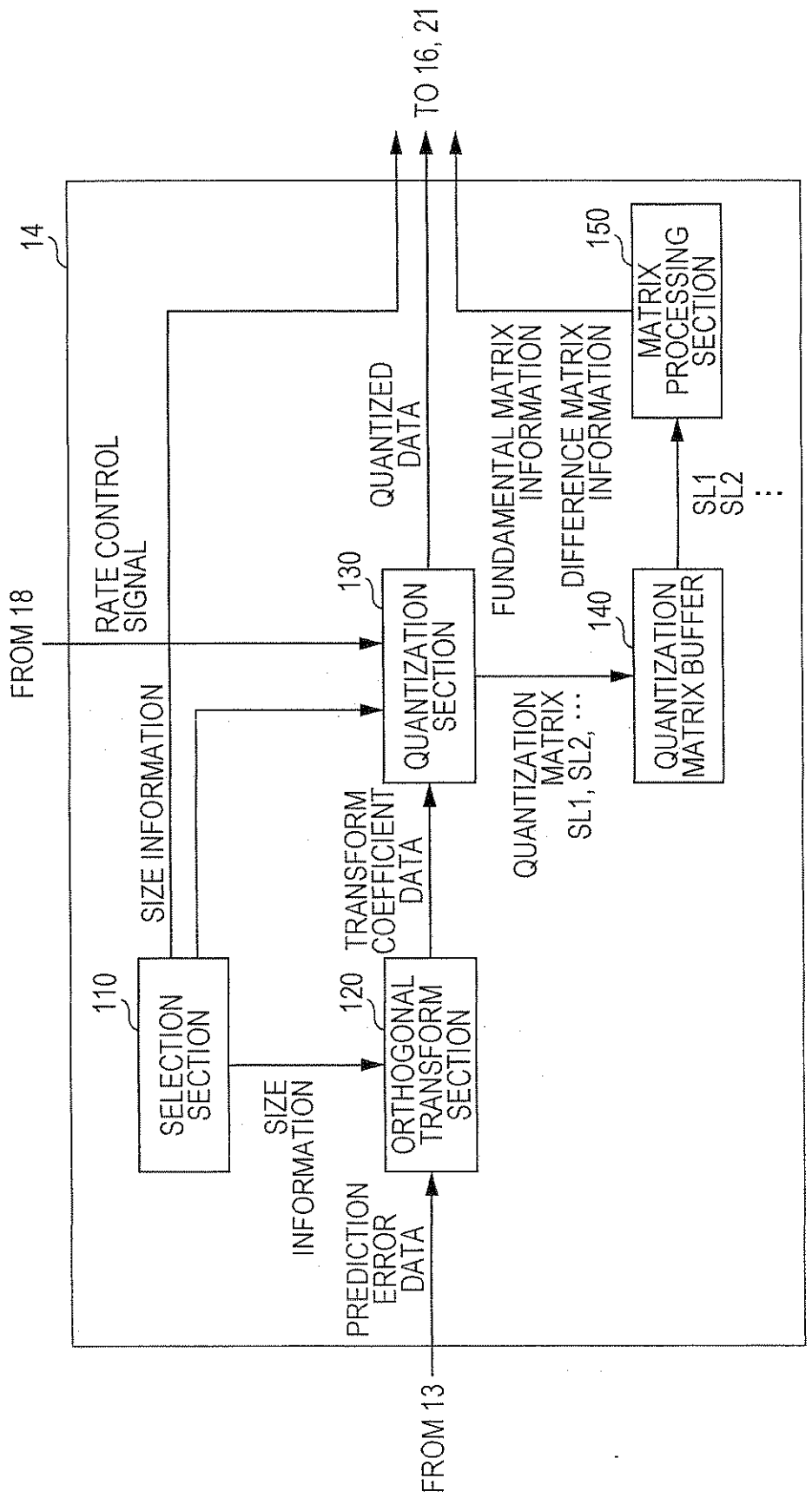
14
TO 16, 21
FROM 18
RATE CONTROL SIGNAL
SIZE INFORMATION
110
SELECTION SECTION
SIZE INFORMATION
120
ORTHOGONAL TRANSFORM SECTION
TRANSFORM COEFFICIENT DATA
PREDICTION ERROR DATA
FROM 13
130
QUANTIZATION SECTION
QUANTIZED DATA
QUANTIZATION MATRIX SL1, SL2, ...
140
QUANTIZATION MATRIX BUFFER
FUNDAMENTAL MATRIX INFORMATION
DIFFERENCE MATRIX INFORMATION
150
MATRIX PROCESSING SECTION
SL1
SL2
...

FIG. 3

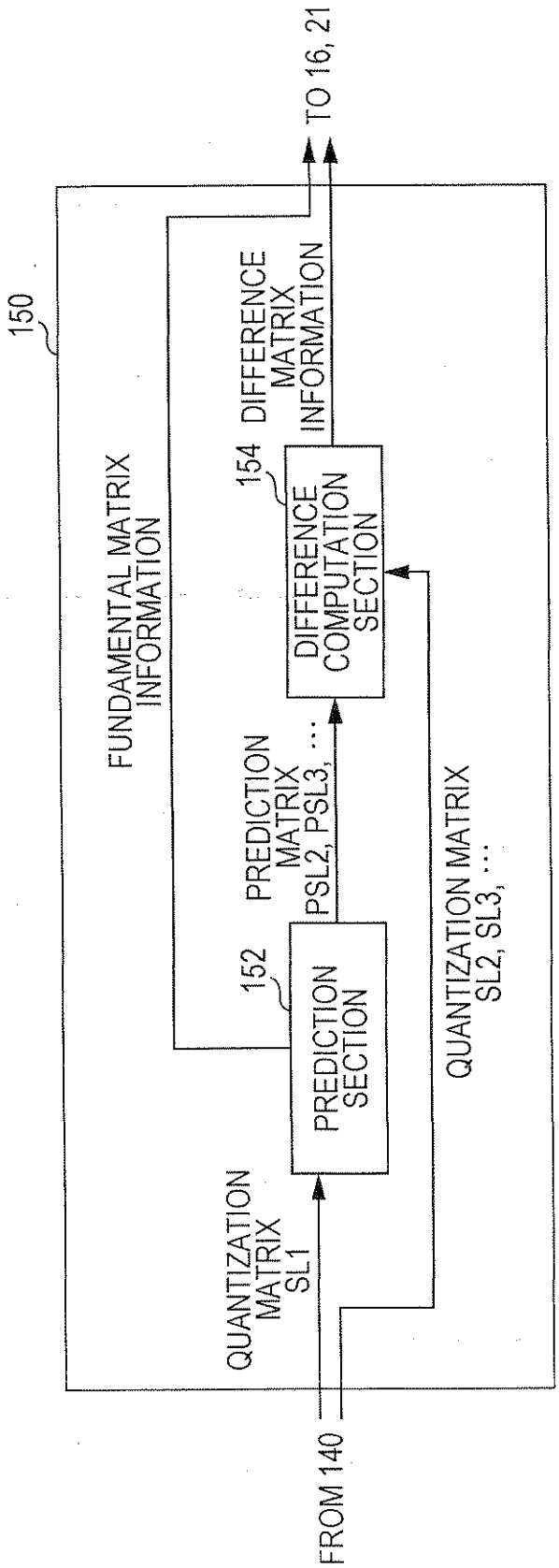
150
FUNDAMENTAL MATRIX INFORMATION
152
PREDICTION SECTION
PREDICTION MATRIX PSL2, PSL3, ...
154
DIFFERENCE COMPUTATION SECTION
DIFFERENCE MATRIX INFORMATION
TO 16, 21
QUANTIZATION MATRIX SL1
QUANTIZATION MATRIX SL2, SL3, ...
FROM 140

FIG. 4

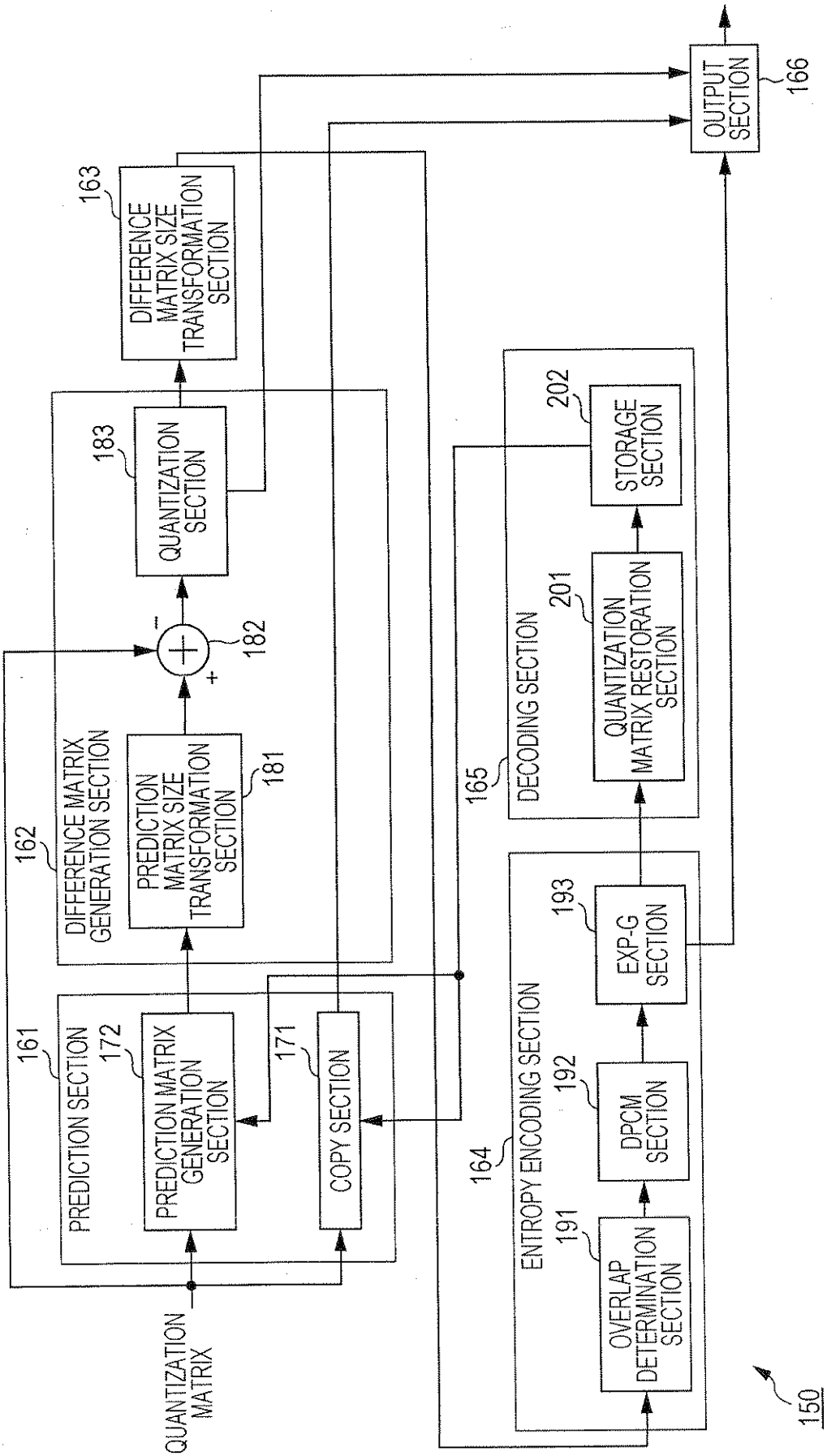
QUANTIZATION MATRIX
PREDICTION SECTION
161
PREDICTION MATRIX GENERATION SECTION
172
COPY SECTION
171
DIFFERENCE MATRIX GENERATION SECTION
162
PREDICTION MATRIX SIZE TRANSFORMATION SECTION
181
182
QUANTIZATION SECTION
183
DIFFERENCE MATRIX SIZE TRANSFORMATION SECTION
163
ENTROPY ENCODING SECTION
164
OVERLAP DETERMINATION SECTION
191
DPCM SECTION
192
EXP-G SECTION
193
DECODING SECTION
165
QUANTIZATION MATRIX RESTORATION SECTION
201
STORAGE SECTION
202
OUTPUT SECTION
166
150

FIG. 5

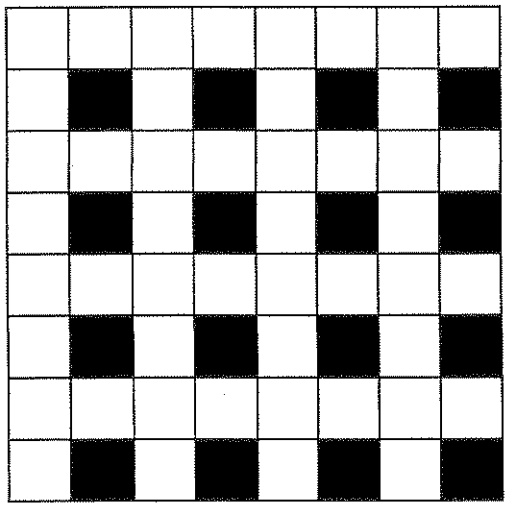

FIG. 6

1	2	3	4	5	6	7	8
2	3	4	5	6	7	8	9
3	4	5	6	7	8	9	10
4	5	6	7	8	9	10	11
5	6	7	8	9	10	11	12
6	7	8	9	10	11	12	13
7	8	9	10	11	12	13	14
8	9	10	11	12	13	14	15



1	2	3	4	5	6	7	8
	3	4	5	6	7	8	9
		5	6	7	8	9	10
			7	8	9	10	11
				9	10	11	12
					11	12	13
						13	14
							15

FIG. 7

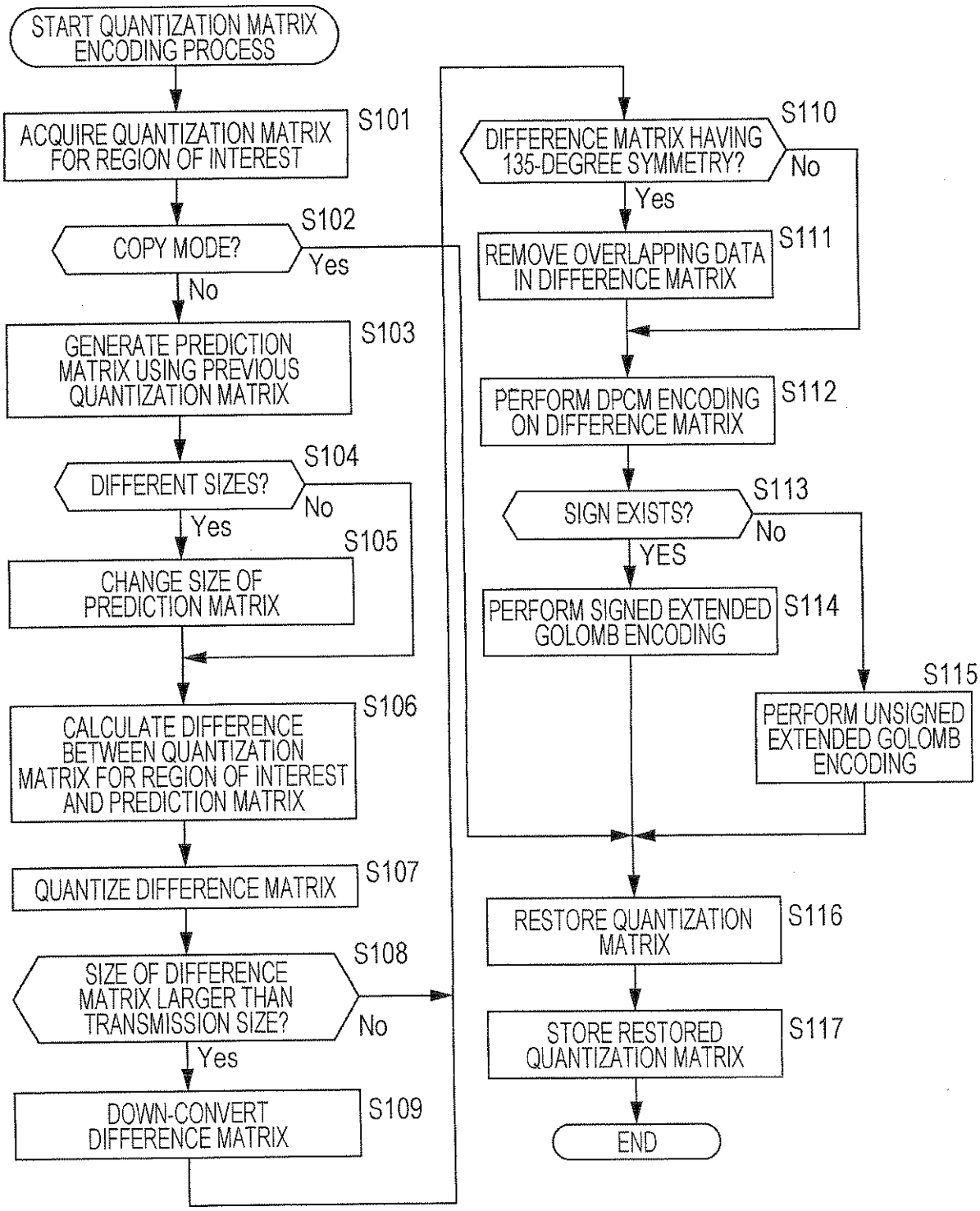
START QUANTIZATION MATRIX ENCODING PROCESS
ACQUIRE QUANTIZATION MATRIX FOR REGION OF INTEREST
S101
COPY MODE?
S102
Yes
No
GENERATE PREDICTION MATRIX USING PREVIOUS QUANTIZATION MATRIX
S103
DIFFERENT SIZES?
S104
No
Yes
CHANGE SIZE OF PREDICTION MATRIX
S105
CALCULATE DIFFERENCE BETWEEN QUANTIZATION MATRIX FOR REGION OF INTEREST AND PREDICTION MATRIX
S106
QUANTIZE DIFFERENCE MATRIX
S107
SIZE OF DIFFERENCE MATRIX LARGER THAN TRANSMISSION SIZE?
S108
No
Yes
DOWN-CONVERT DIFFERENCE MATRIX
S109
DIFFERENCE MATRIX HAVING 135-DEGREE SYMMETRY?
S110
No
Yes
REMOVE OVERLAPPING DATA IN DIFFERENCE MATRIX
S111
PERFORM DPCM ENCODING ON DIFFERENCE MATRIX
S112
SIGN EXISTS?
S113
No
YES
PERFORM SIGNED EXTENDED GOLOMB ENCODING
S114
PERFORM UNSIGNED EXTENDED GOLOMB ENCODING
S115
RESTORE QUANTIZATION MATRIX
S116
STORE RESTORED QUANTIZATION MATRIX
S117
END

FIG. 8

	Descriptor
Qscale0: QUANTIZATION VALUE FOR REGION 0	ue(v)
Qscale1: QUANTIZATION VALUE FOR REGION 1	ue(v)
Qscale2: QUANTIZATION VALUE FOR REGION 2	ue(v)
Qscale3: QUANTIZATION VALUE FOR REGION 3	ue(v)
for(SizeID = 0;SizeID<4;SizeID ++){	
for(MatrixID = 0;MatrixID<(SizeID == 3)?2:6;MatrixID ++){	
pred_mode: PREDICTION MODE FOR MATRIX	ue(v)
if(pred_mode == 0){//Copy	
pred_matrix_id_delta: USED FOR PREDICTION OF MatrixID. pred_matrix_id= MatrixID – (pred_matrix_id_delta + 1);	ue(v)
}else if(pred_mode == 1){//Pred of arbitary size	
pred_matrix_id_delta: USED FOR PREDICTION OF MatrixID. pred_matrix_id= MatrixID + pred_matrix_id_delta;	se(v)
pred_size_id_delta: USED FOR PREDICTION OF MatrixID. pred_size_id= SizeID + pred_size_id_delta;	se(v)
residual_flag: WHETHER OR NOT RESIDUAL SIGNAL EXISTS?	u(1)
if(residual_flag){	
residual_down_sampling_flag: WHETHER OR NOT RESIDUAL SIGNAL IS SUBJECTED TO DOWNSAMPLING?	u(1)
residual_symmetry_flag: WHETHER OR NOT RESIDUAL SIGNAL IS A 135-DEGREE SYMMETRIC MATRIX?	u(1)
scaling_list_residual(ScalingListResidual[SizeID][MatrixID],residual_symmetry_flag,(1<<(4 + (SizeID<<1))))	
}	
}	
}	
}	

FIG. 9

PARAMETER NAME	DESCRIPTION
QMPS ID	IDENTIFIER FOR IDENTIFYING QMPSs FROM EACH OTHER
GENERATION MODE PRESENCE FLAG	FLAG INDICATING WHETHER GENERATION MODE SEGMENT (pred_mode) IS PRESENT
GENERATION MODE <pred_mode>	SEGMENTS INDICATING MODES OF QUANTIZATION MATRIX GENERATION PROCESS e.g.) 0: COPY, 1: SPECIFYING OF AXIS, 2: FULL-SCAN
IN COPY MODE (pred_mode = '0')	
SOURCE ID	QMPS ID SPECIFYING QMPS OF COPY SOURCE * IF A SPECIFIED MATRIX IS USED, SELF ID IS SPECIFIED
COPY SOURCE SIZE	SIZE OF QUANTIZATION MATRIX OF COPY SOURCE
COPY SOURCE TYPE	TYPE OF QUANTIZATION MATRIX OF COPY SOURCE
RESIDUAL FLAG	FLAG INDICATING PRESENCE OF RESIDUE
RESIDUAL DATA	DATA FOR GENERATING RESIDUAL MATRIX
IN FULL-SCAN MODE (pred_mode = '1')	
DIFFERENCE DATA	LINEAR ARRAY OF DIFFERENCE VALUES CALCULATED USING DPCM METHOD FOR EACH ELEMENT IN QUANTIZATION MATRIX

QUANTIZATION MATRIX PARAMETER SET

FIG. 10

```
01 | QuantizaionMatrixParameterSet(){
02 |  quantizaion_matrix_parameter_id    ···QMPS ID
03 |  pred_present_flag                  ···GENERATION MODE PRESENCE FLAG
04 |  for(j=0;i<Sizeidc;i++){                    //LOOP FOR EACH SIZE//
05 |   for(j=0;j<6;j++){                         //LOOP FOR EACH TYPE//
06 |    if(pred_present_flag){
07 |     pred_mode                       ···GENERATION MODE
08 |     if(pred_mode==0){                       //COPY MODE//
09 |      pred_qmps_id                   ···SOURCE ID
10 |      pred_size_idc                  ···COPY SOURCE SIZE
11 |      pred_matrix_id                 ···COPY SOURCE TYPE
12 |      pred_matrix(j,i,pred_qmps_id,pred_size_idc,pred_matrix_id)
                                            //COPY//
13 |      residual_flag                  ···RESIDUAL FLAG
14 |      if(residual_flag){
15 |       residual_matrix(i)                   //ADD RESIDUES//
51 |     }else if(pred_mode==1)                 //FULL-SCAN MODE//
52 |      qmatrix(i.j)
53 |     }
54 |    }else{
55 |     qmatrix(i.j)
56 |    }
57 |   }
58 |  }
59 | }
```

FIG. 11

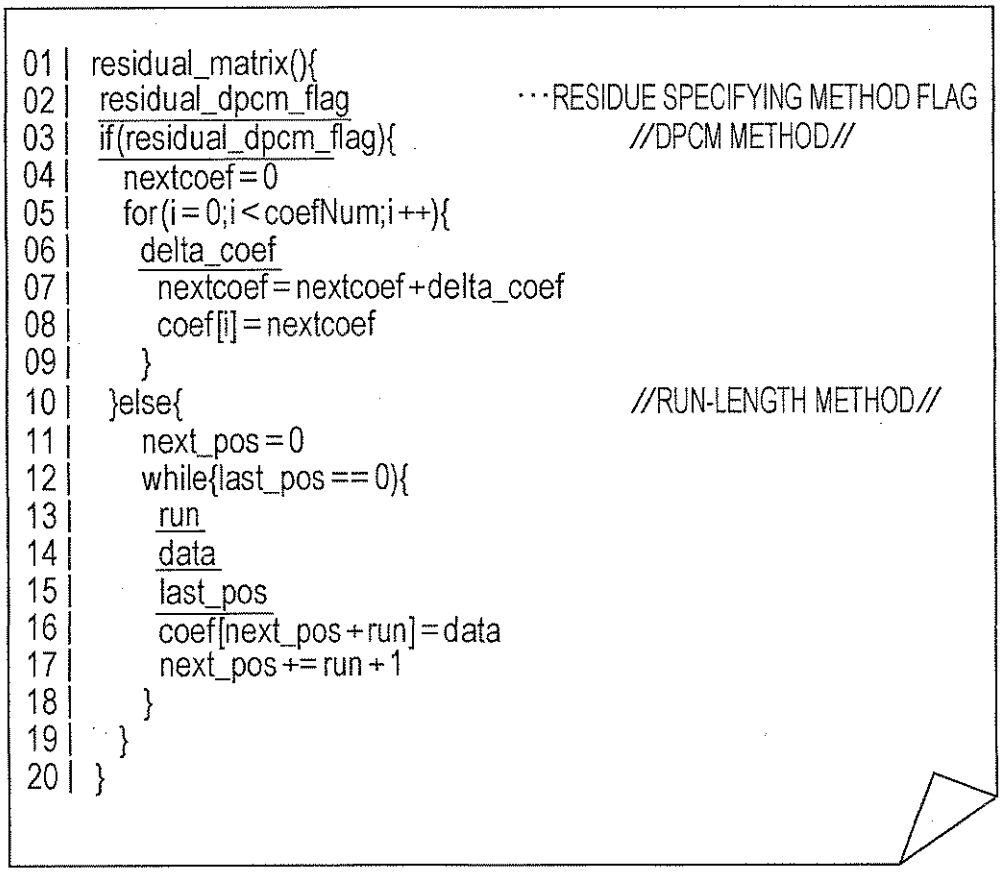

```
residual_matrix(){
 residual_dpcm_flag                    ···RESIDUE SPECIFYING METHOD FLAG
 if(residual_dpcm_flag){                        //DPCM METHOD//
   nextcoef=0
   for(i=0;i<coefNum;i++){
    delta_coef
     nextcoef=nextcoef+delta_coef
     coef[i]=nextcoef
    }
  }else{                                        //RUN-LENGTH METHOD//
    next_pos=0
    while{last_pos==0){
     run
     data
     last_pos
     coef[next_pos+run]=data
     next_pos+=run+1
    }
  }
}
```

FIG. 12

```
01 | QuantizaionMatrixParameterSet(){
02 |   quantizaion_matrix_parameter_id    ···QMPS ID
03 |   use_default_only_flag
04 |   use_dqp_flag
05 |   if(use_default_only_flag
06 |     pred_present_flag                ···GENERATION MODE PRESENCE FLAG
07 |     Qscale0                          ···FIRST QUANTIZATION SCALE
08 |     Qscale1                          ···SECOND QUANTIZATION SCALE
09 |     Qscale2                          ···THIRD QUANTIZATION SCALE
10 |     Qscale3                          ···FOURTH QUANTIZATION SCALE
11 |     for(i=0;i<4;j++){                      //LOOP FOR EACH SIZE//
12 |       for(i=0;j<6;j++){                    //LOOP FOR EACH SIZE//
13 |         if(pred_present_flag){
14 |         pred_mode                    ···GENERATION MODE
15 |         if(pred_mode==0){                  //COPY MODE//
16 |         pred_qmps_id                 ···SOURCE ID
17 |         pred_size_idc                ···COPY SOURCE SIZE
18 |         pred_matrix_id               ···COPY SOURCE TYPE
19 |         residual_flag                ···RESIDUAL FLAG
20 |         if(residual_flag){
21 |           residual_matrix()                //SPECIFY RESIDUES//
22 |         }
```

//SEE FIG. 11//

```
77 |       }
78 |     }
79 |   }
80 | }
```

FIG. 13

```
57 |     }else if(pred_mode == 1)                    //FULL-SCAN MODE//
58 |       matrix_symmetry_flag
59 |       matrix_sign_flag
60 |       matrix_dpcm_run_flag          ···SPECIFYING METHOD FLAG
61 |       vlc_table_data                ···VCL TABLE (DATA)
62 |       if(matrix_dpcm_run_flag){
63 |         vlc_table_run               ···VCL TABLE (RUNS)
64 |       }
65 |       qmatrix()
66 |     }
67 |   }else{
68 |       matrix_symmetry_flag
69 |       matrix_sign_flag
70 |       matrix_dpcm_run_flalg         ···SPECIFYING METHOD FLAG
71 |       vlc_table_data                ···VCL TABLE (DATA)
72 |       if(matrix_dpcm_run_flag){
73 |         vlc_table_run               ···VCL TABLE (RUNS)
74 |       }
75 |       qmatrix()
76 |     }
```

FIG. 14

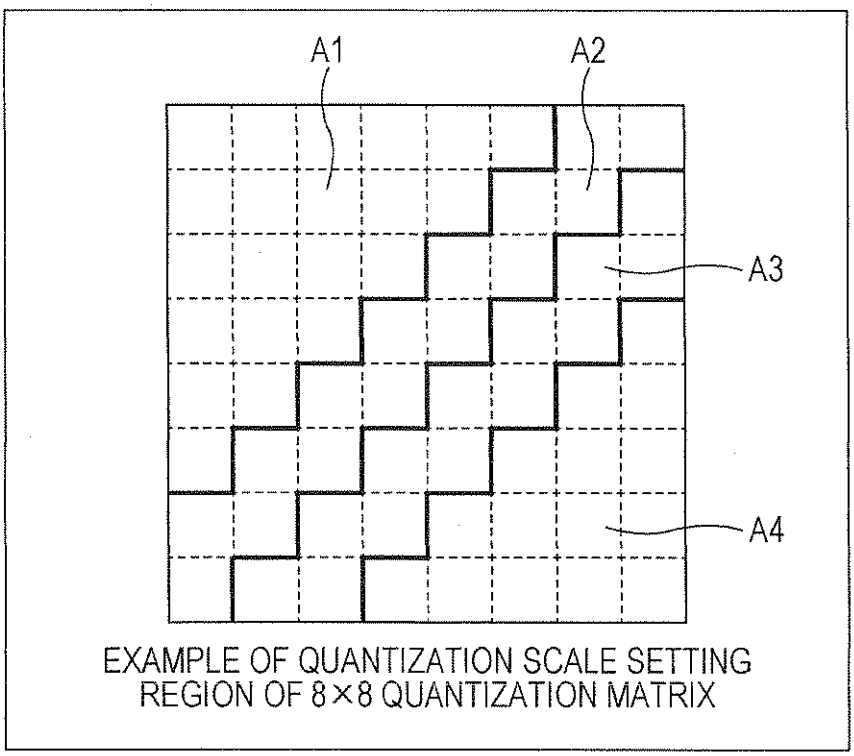

EXAMPLE OF QUANTIZATION SCALE SETTING
REGION OF 8×8 QUANTIZATION MATRIX

FIG. 15

REGION A1: Qscale0 = 1 (NOT QUANTIZED)

REGION A2: Qscale1 = 2

REGION A3: Qscale2 = 3

REGION A4: Qscale3 = 4

$$\begin{bmatrix} 1 & 1 & 1 & 1 & 1 & 1 & 2 & 2 \\ 1 & 1 & 1 & 1 & 1 & 2 & 2 & 3 \\ 1 & 1 & 1 & 1 & 2 & 2 & 3 & 3 \\ 1 & 1 & 1 & 2 & 2 & 3 & 3 & 4 \\ 1 & 1 & 2 & 2 & 3 & 3 & 4 & 4 \\ 1 & 2 & 2 & 3 & 3 & 4 & 4 & 4 \\ 2 & 2 & 3 & 3 & 4 & 4 & 4 & 4 \\ 2 & 3 & 3 & 4 & 4 & 4 & 4 & 4 \end{bmatrix}$$

EXAMPLE OF
QUANTIZATION SCALE SETTING

FIG. 16

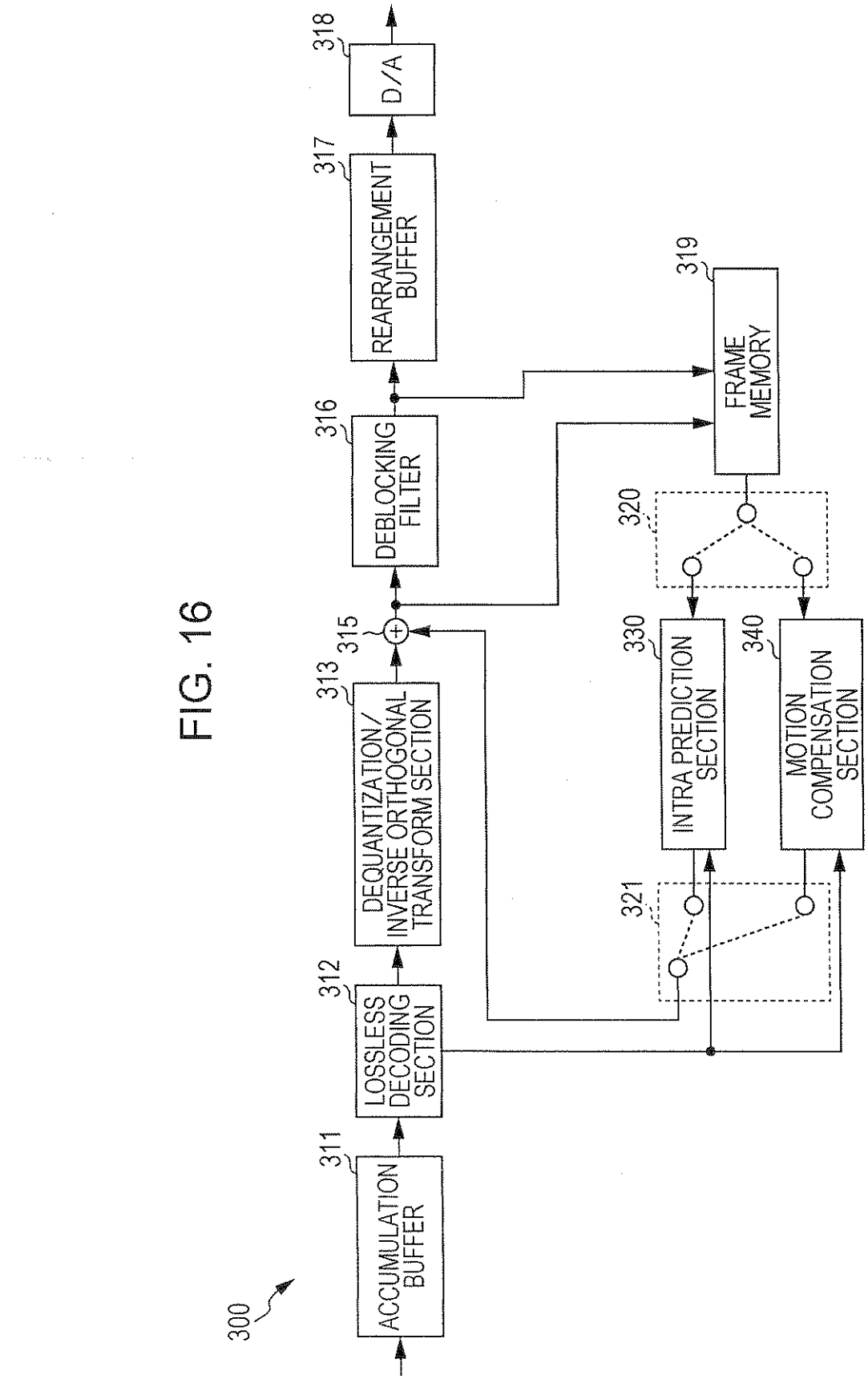
300
311
ACCUMULATION BUFFER
312
LOSSLESS DECODING SECTION
313
DEQUANTIZATION / INVERSE ORTHOGONAL TRANSFORM SECTION
315
316
DEBLOCKING FILTER
317
REARRANGEMENT BUFFER
318
D/A
319
FRAME MEMORY
320
321
330
INTRA PREDICTION SECTION
340
MOTION COMPENSATION SECTION

FIG. 17

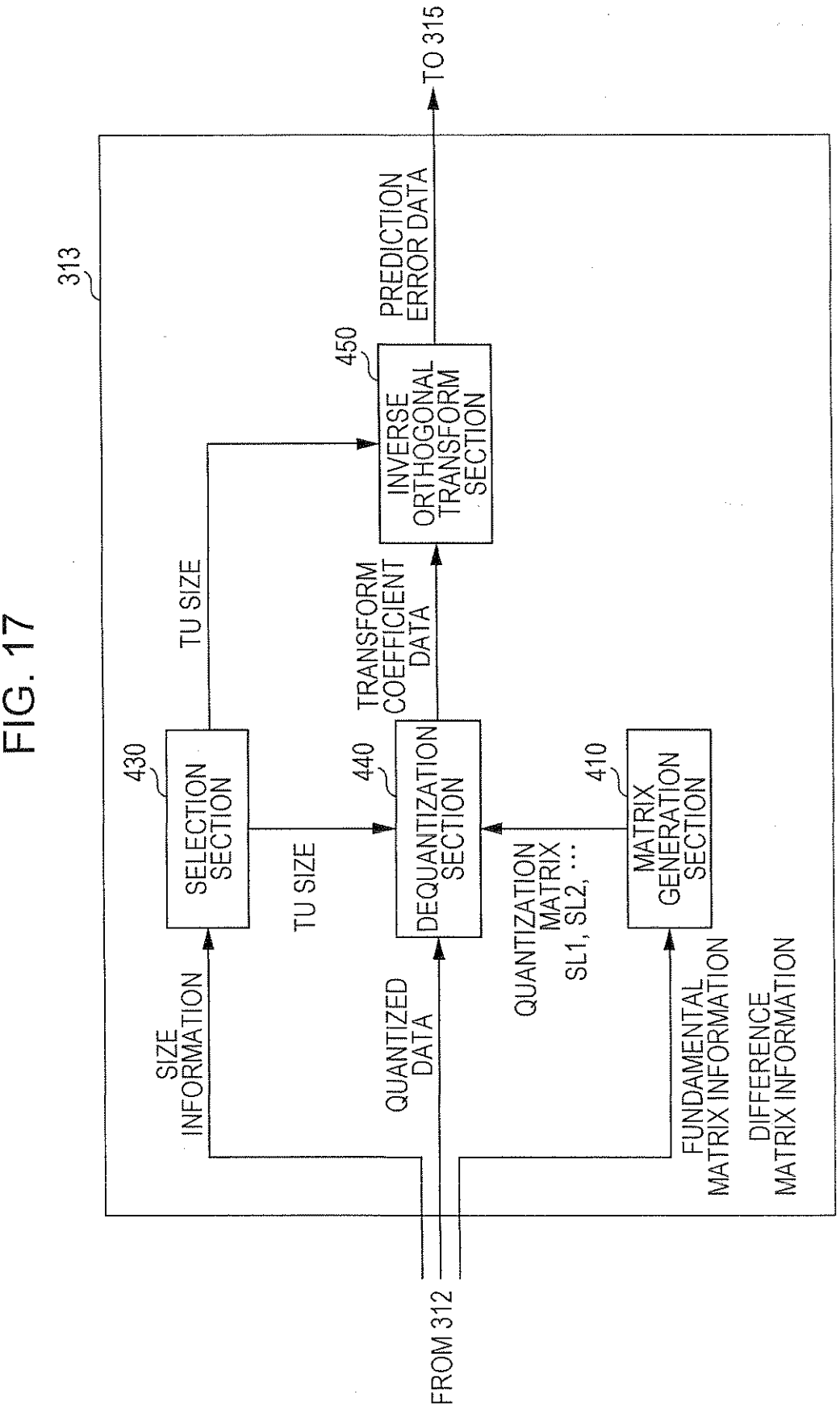
313
TO 315
PREDICTION ERROR DATA
450
INVERSE ORTHOGONAL TRANSFORM SECTION
TU SIZE
TRANSFORM COEFFICIENT DATA
430
SELECTION SECTION
440
DEQUANTIZATION SECTION
410
MATRIX GENERATION SECTION
TU SIZE
QUANTIZATION MATRIX SL1, SL2, ···
SIZE INFORMATION
QUANTIZED DATA
FUNDAMENTAL MATRIX INFORMATION
DIFFERENCE MATRIX INFORMATION
FROM 312

FIG. 18

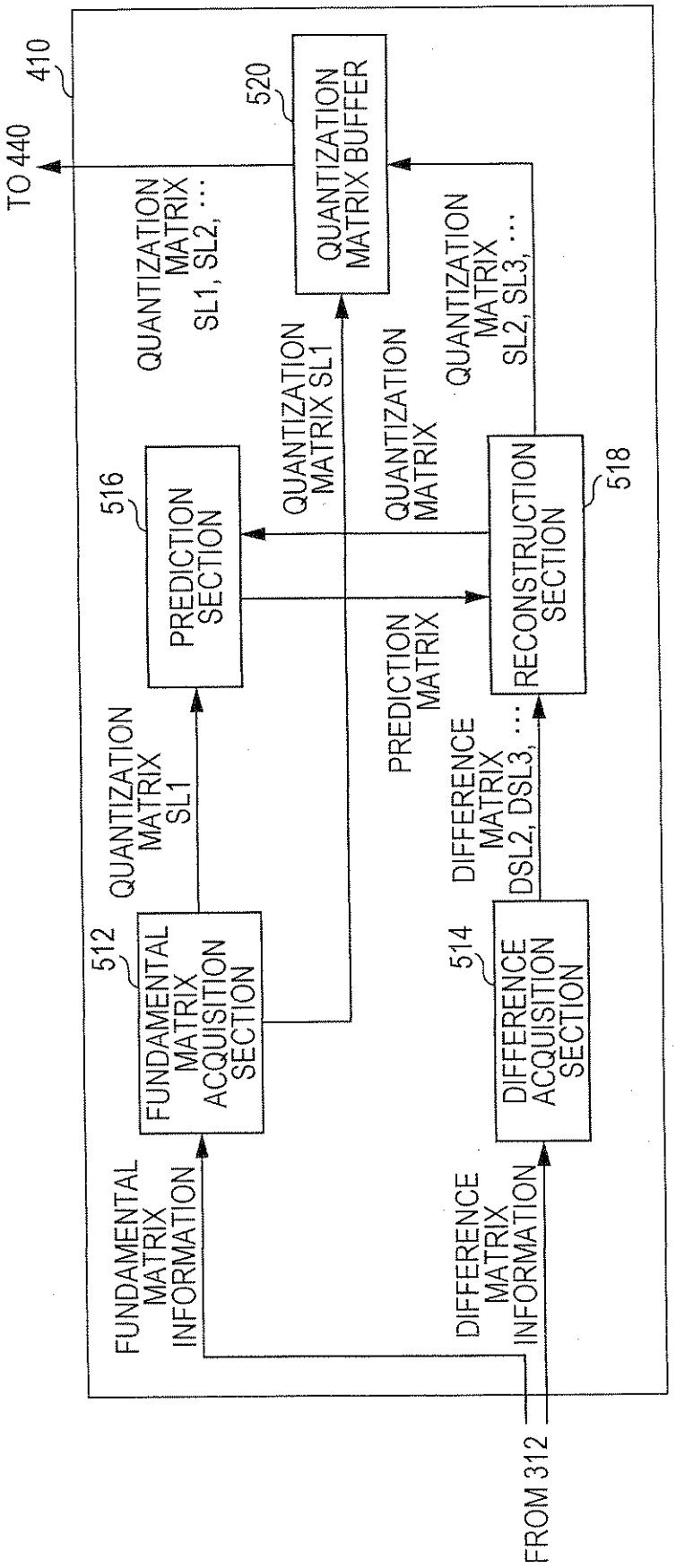
410
TO 440
520
QUANTIZATION MATRIX BUFFER
QUANTIZATION MATRIX SL1, SL2, ...
QUANTIZATION MATRIX SL1
QUANTIZATION MATRIX
QUANTIZATION MATRIX SL2, SL3, ...
516
PREDICTION SECTION
518
RECONSTRUCTION SECTION
PREDICTION MATRIX
QUANTIZATION MATRIX SL1
DIFFERENCE MATRIX DSL2, DSL3, ...
512
FUNDAMENTAL MATRIX ACQUISITION SECTION
514
DIFFERENCE ACQUISITION SECTION
FUNDAMENTAL MATRIX INFORMATION
DIFFERENCE MATRIX INFORMATION
FROM 312

FIG. 19

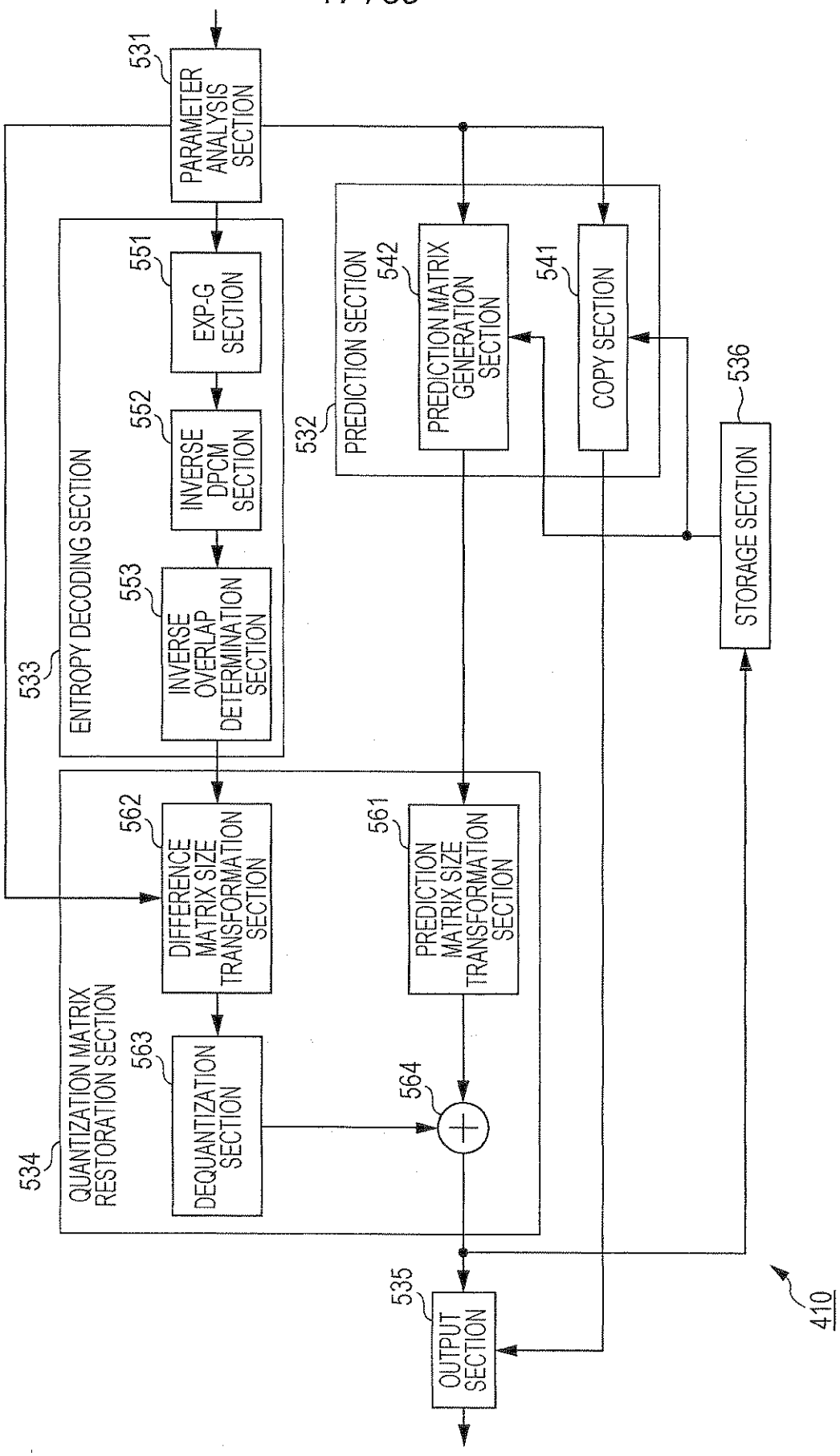
531
PARAMETER ANALYSIS SECTION
533
ENTROPY DECODING SECTION
551
EXP-G SECTION
552
INVERSE DPCM SECTION
553
INVERSE OVERLAP DETERMINATION SECTION
532
PREDICTION SECTION
542
PREDICTION MATRIX GENERATION SECTION
541
COPY SECTION
536
STORAGE SECTION
534
QUANTIZATION MATRIX RESTORATION SECTION
562
DIFFERENCE MATRIX SIZE TRANSFORMATION SECTION
561
PREDICTION MATRIX SIZE TRANSFORMATION SECTION
563
DEQUANTIZATION SECTION
564
535
OUTPUT SECTION
410

FIG. 20

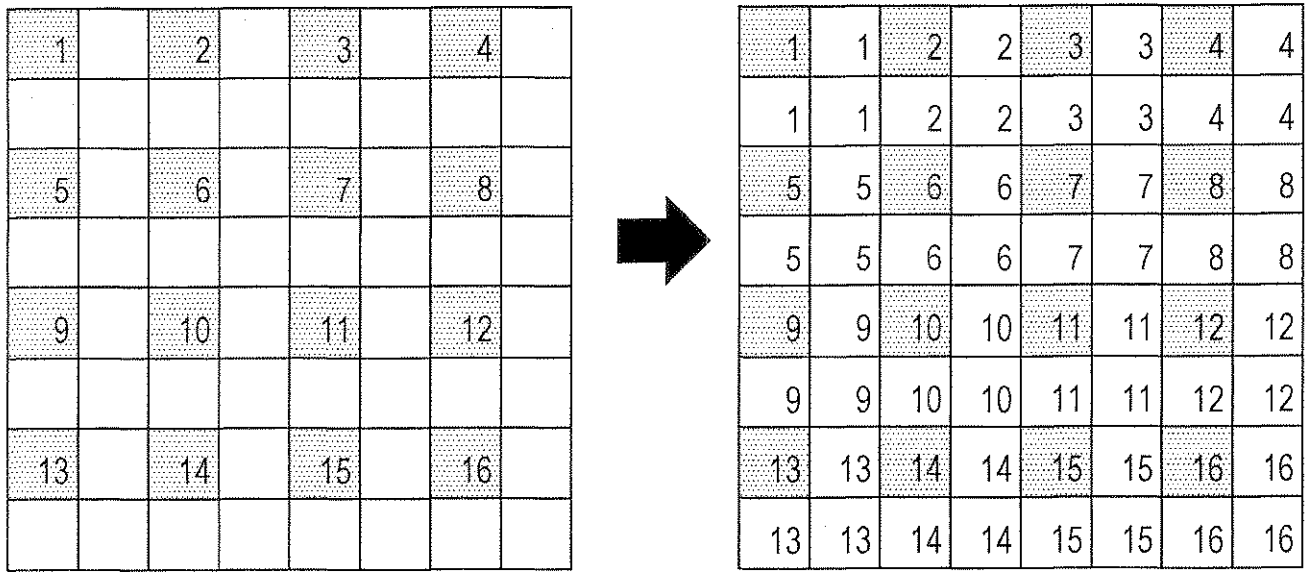
1 2 3 4
5 6 7 8
9 10 11 12
13 14 15 16
1 1 2 2 3 3 4 4
1 1 2 2 3 3 4 4
5 5 6 6 7 7 8 8
5 5 6 6 7 7 8 8
9 9 10 10 11 11 12 12
9 9 10 10 11 11 12 12
13 13 14 14 15 15 16 16
13 13 14 14 15 15 16 16

FIG. 21

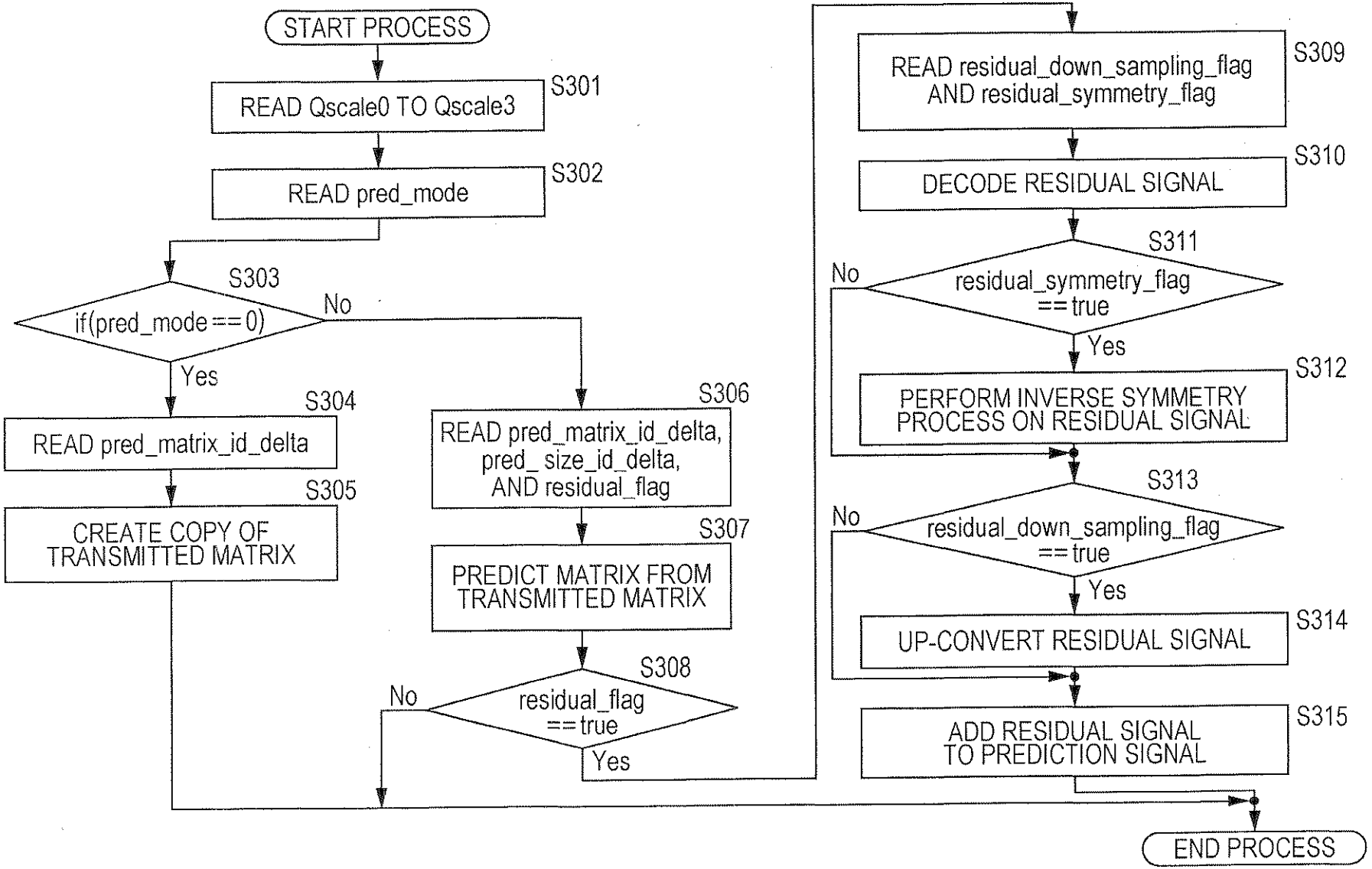
START PROCESS
READ Qscale0 TO Qscale3
S301
READ pred_mode
S302
S303
if(pred_mode == 0)
No
Yes
S304
READ pred_matrix_id_delta
S305
CREATE COPY OF TRANSMITTED MATRIX
S306
READ pred_matrix_id_delta, pred_ size_id_delta, AND residual_flag
S307
PREDICT MATRIX FROM TRANSMITTED MATRIX
S308
No
residual_flag == true
Yes
S309
READ residual_down_sampling_flag AND residual_symmetry_flag
S310
DECODE RESIDUAL SIGNAL
S311
No
residual_symmetry_flag == true
Yes
S312
PERFORM INVERSE SYMMETRY PROCESS ON RESIDUAL SIGNAL
S313
No
residual_down_sampling_flag == true
Yes
S314
UP-CONVERT RESIDUAL SIGNAL
S315
ADD RESIDUAL SIGNAL TO PREDICTION SIGNAL
END PROCESS

FIG. 22

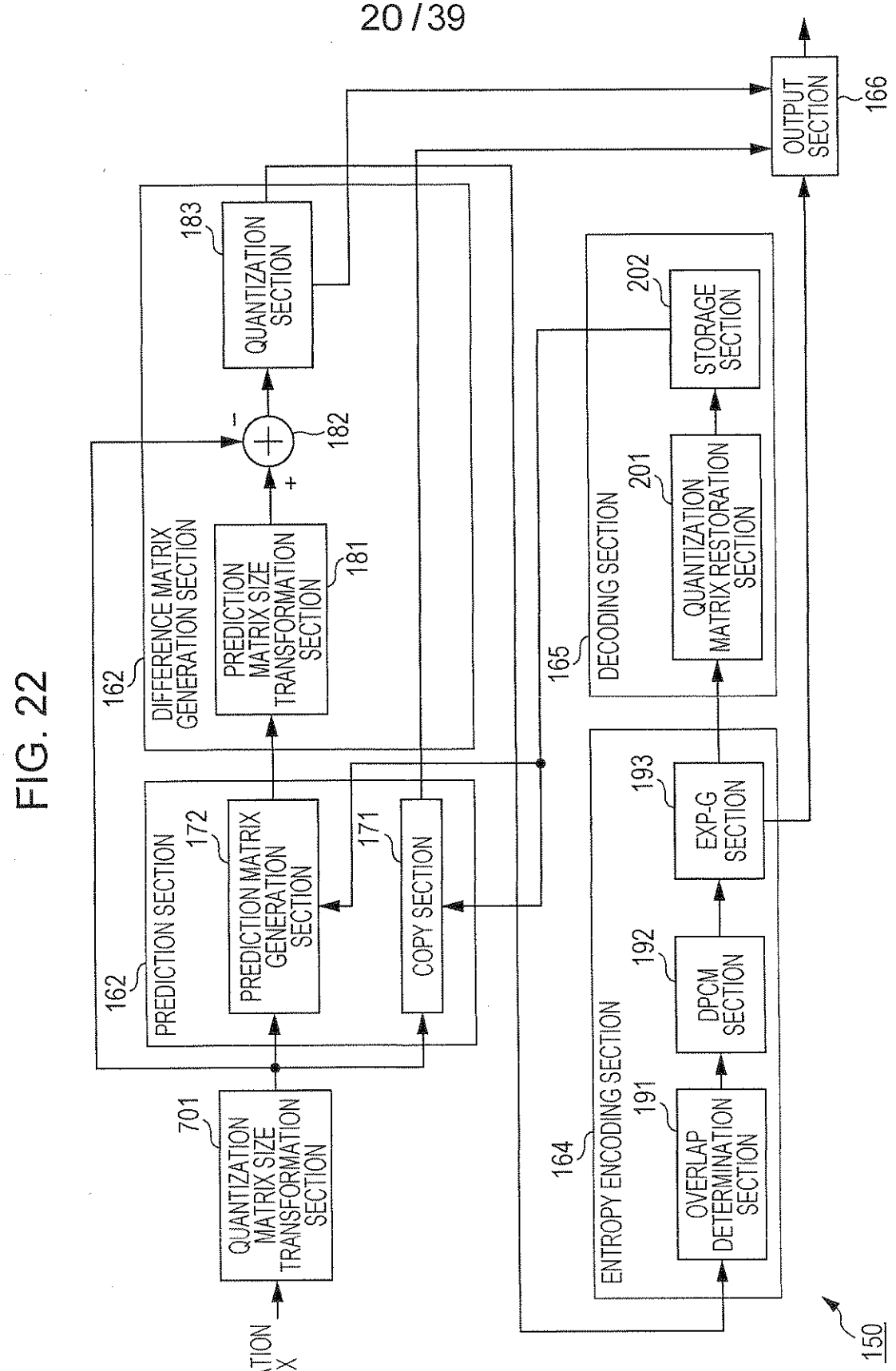
QUANTIZATION MATRIX
701
QUANTIZATION MATRIX SIZE TRANSFORMATION SECTION
162
PREDICTION SECTION
172
PREDICTION MATRIX GENERATION SECTION
171
COPY SECTION
162
DIFFERENCE MATRIX GENERATION SECTION
181
PREDICTION MATRIX SIZE TRANSFORMATION SECTION
182
183
QUANTIZATION SECTION
165
DECODING SECTION
201
QUANTIZATION MATRIX RESTORATION SECTION
202
STORAGE SECTION
164
ENTROPY ENCODING SECTION
191
OVERLAP DETERMINATION SECTION
192
DPCM SECTION
193
EXP-G SECTION
166
OUTPUT SECTION
150

FIG. 23

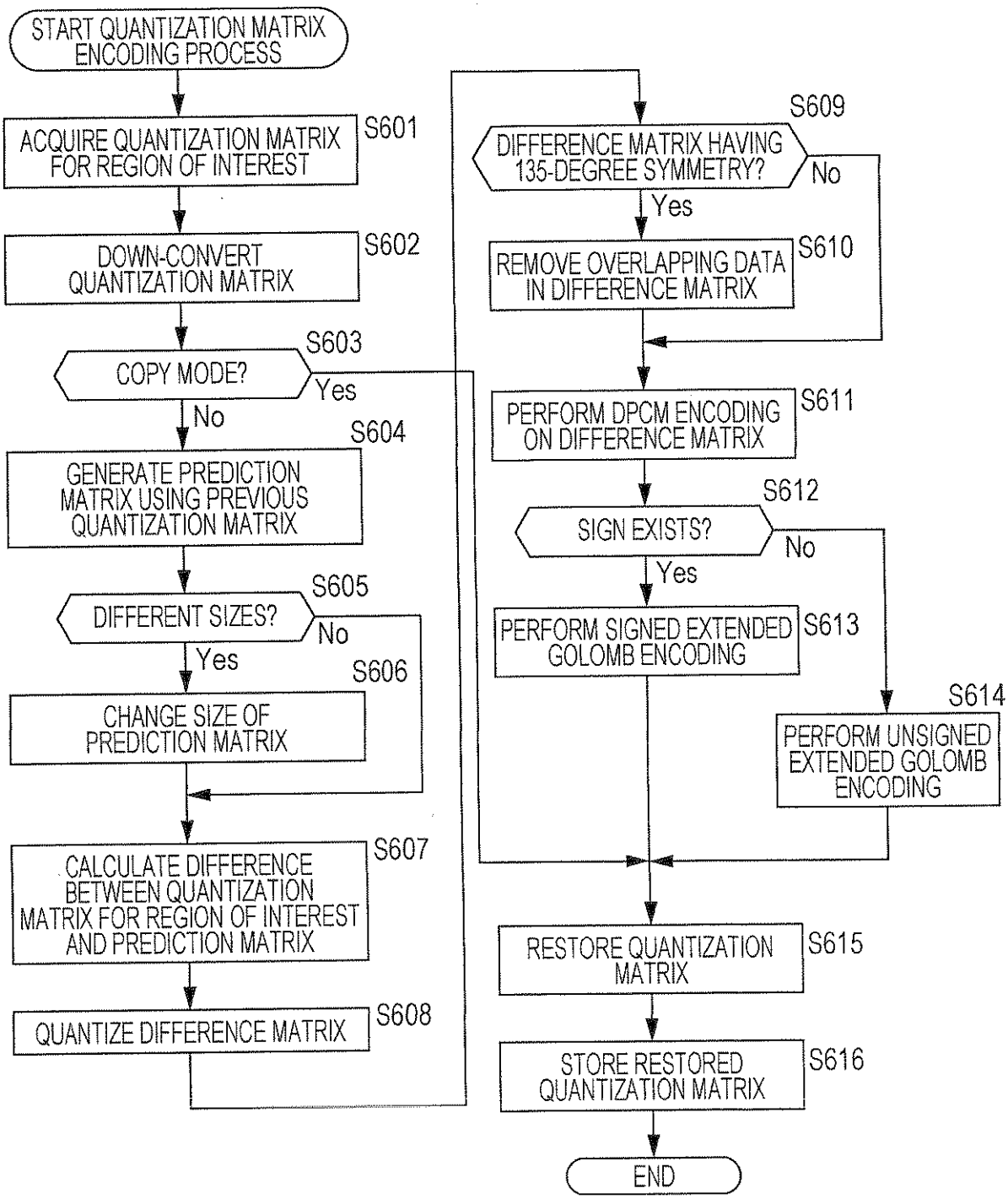
START QUANTIZATION MATRIX ENCODING PROCESS
ACQUIRE QUANTIZATION MATRIX FOR REGION OF INTEREST
S601
DOWN-CONVERT QUANTIZATION MATRIX
S602
COPY MODE?
S603
Yes
No
GENERATE PREDICTION MATRIX USING PREVIOUS QUANTIZATION MATRIX
S604
DIFFERENT SIZES?
S605
No
Yes
CHANGE SIZE OF PREDICTION MATRIX
S606
CALCULATE DIFFERENCE BETWEEN QUANTIZATION MATRIX FOR REGION OF INTEREST AND PREDICTION MATRIX
S607
QUANTIZE DIFFERENCE MATRIX
S608
DIFFERENCE MATRIX HAVING 135-DEGREE SYMMETRY?
S609
No
Yes
REMOVE OVERLAPPING DATA IN DIFFERENCE MATRIX
S610
PERFORM DPCM ENCODING ON DIFFERENCE MATRIX
S611
SIGN EXISTS?
S612
No
Yes
PERFORM SIGNED EXTENDED GOLOMB ENCODING
S613
PERFORM UNSIGNED EXTENDED GOLOMB ENCODING
S614
RESTORE QUANTIZATION MATRIX
S615
STORE RESTORED QUANTIZATION MATRIX
S616
END

FIG. 24

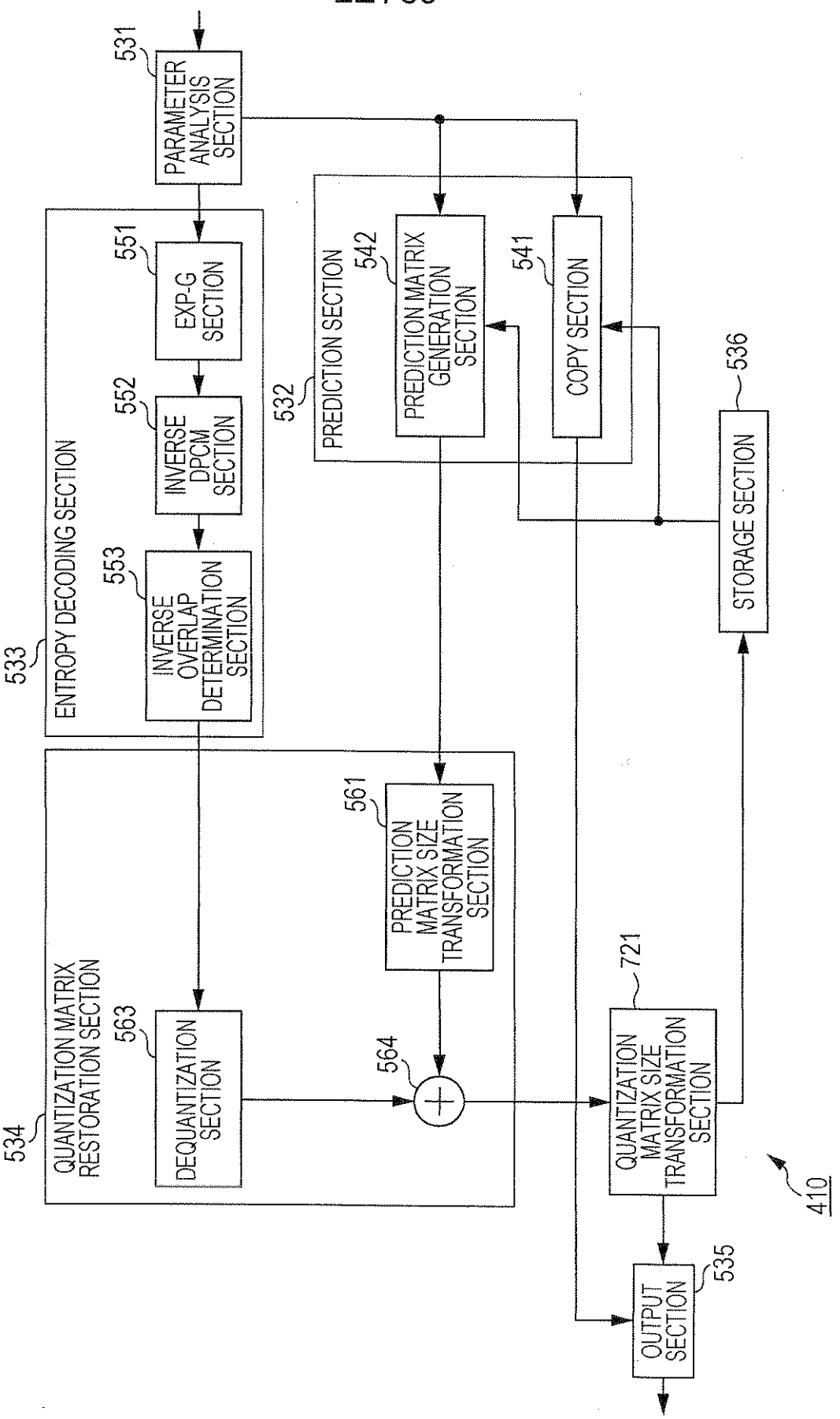
531
PARAMETER ANALYSIS SECTION
551
EXP-G SECTION
552
INVERSE DPCM SECTION
553
INVERSE OVERLAP DETERMINATION SECTION
533
ENTROPY DECODING SECTION
532
PREDICTION SECTION
542
PREDICTION MATRIX GENERATION SECTION
541
COPY SECTION
536
STORAGE SECTION
561
PREDICTION MATRIX SIZE TRANSFORMATION SECTION
563
DEQUANTIZATION SECTION
564
534
QUANTIZATION MATRIX RESTORATION SECTION
721
QUANTIZATION MATRIX SIZE TRANSFORMATION SECTION
535
OUTPUT SECTION
410

FIG. 25

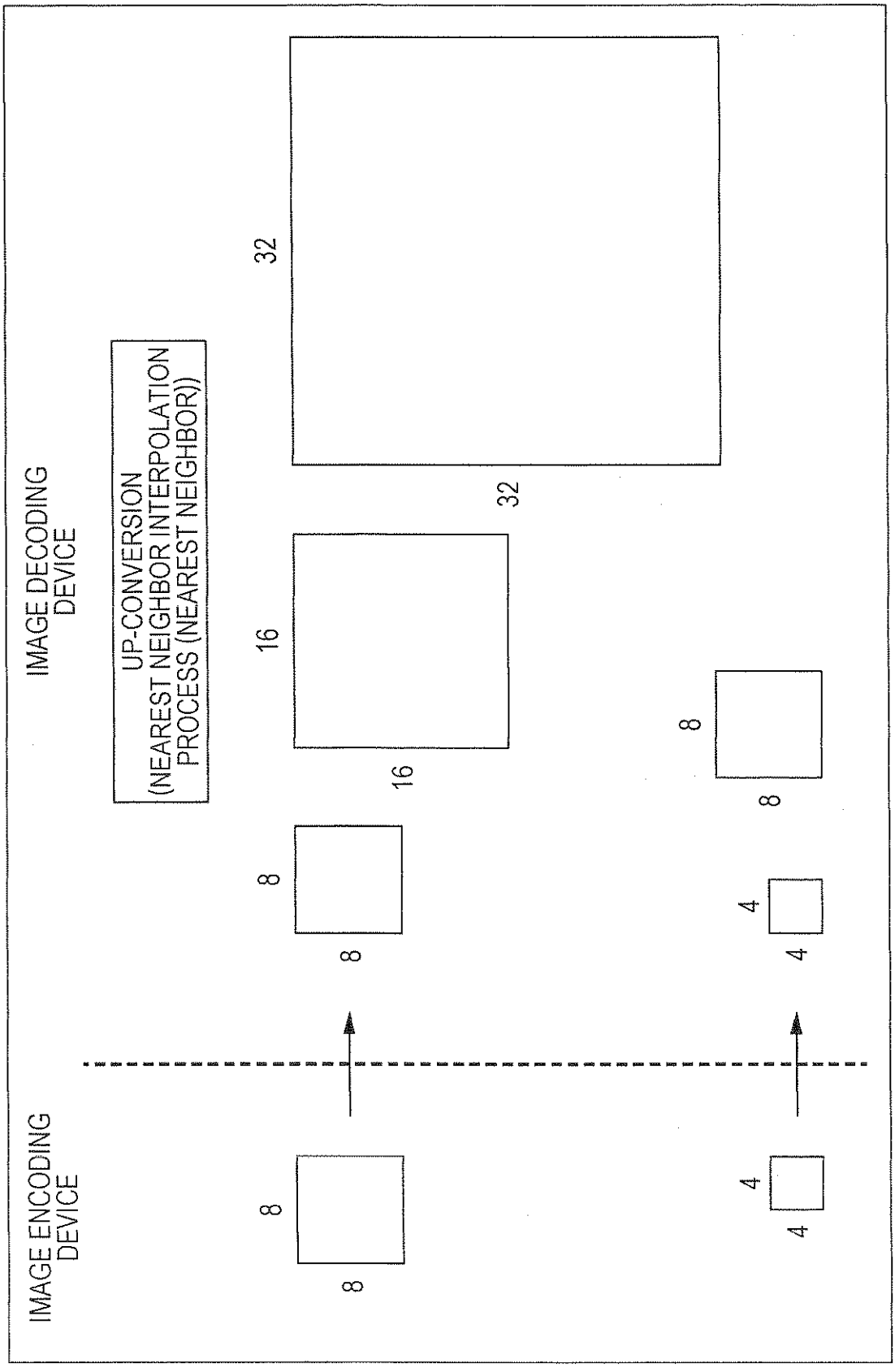
IMAGE ENCODING DEVICE
IMAGE DECODING DEVICE
UP-CONVERSION (NEAREST NEIGHBOR INTERPOLATION PROCESS (NEAREST NEIGHBOR))
8
8
8
8
16
16
32
32
4
4
4
4

FIG. 26

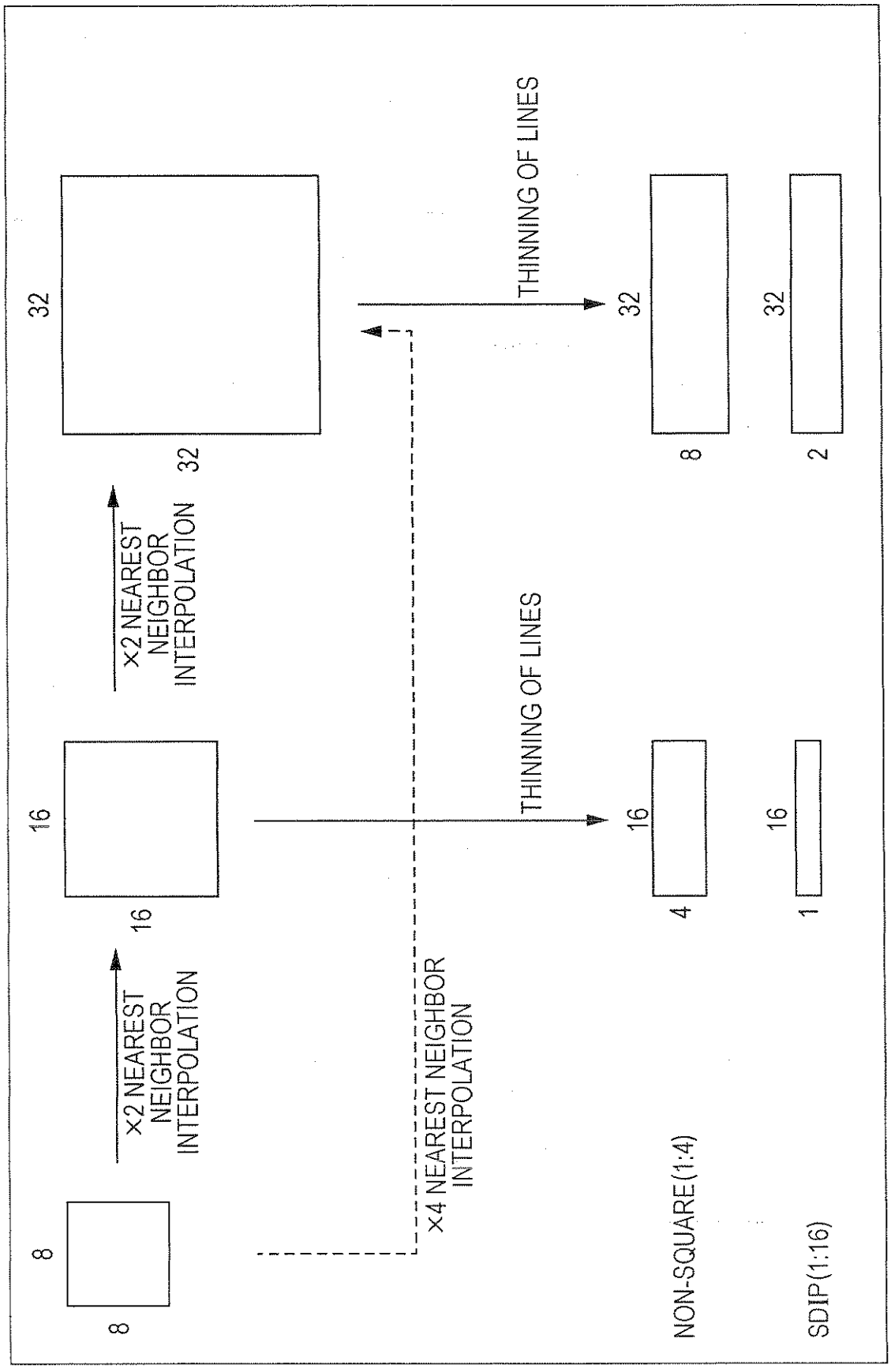
8
8
×2 NEAREST NEIGHBOR INTERPOLATION
16
16
×2 NEAREST NEIGHBOR INTERPOLATION
32
32
×4 NEAREST NEIGHBOR INTERPOLATION
THINNING OF LINES
16
4
THINNING OF LINES
32
8
16
1
32
2
NON-SQUARE(1:4)
SDIP(1:16)

FIG. 27

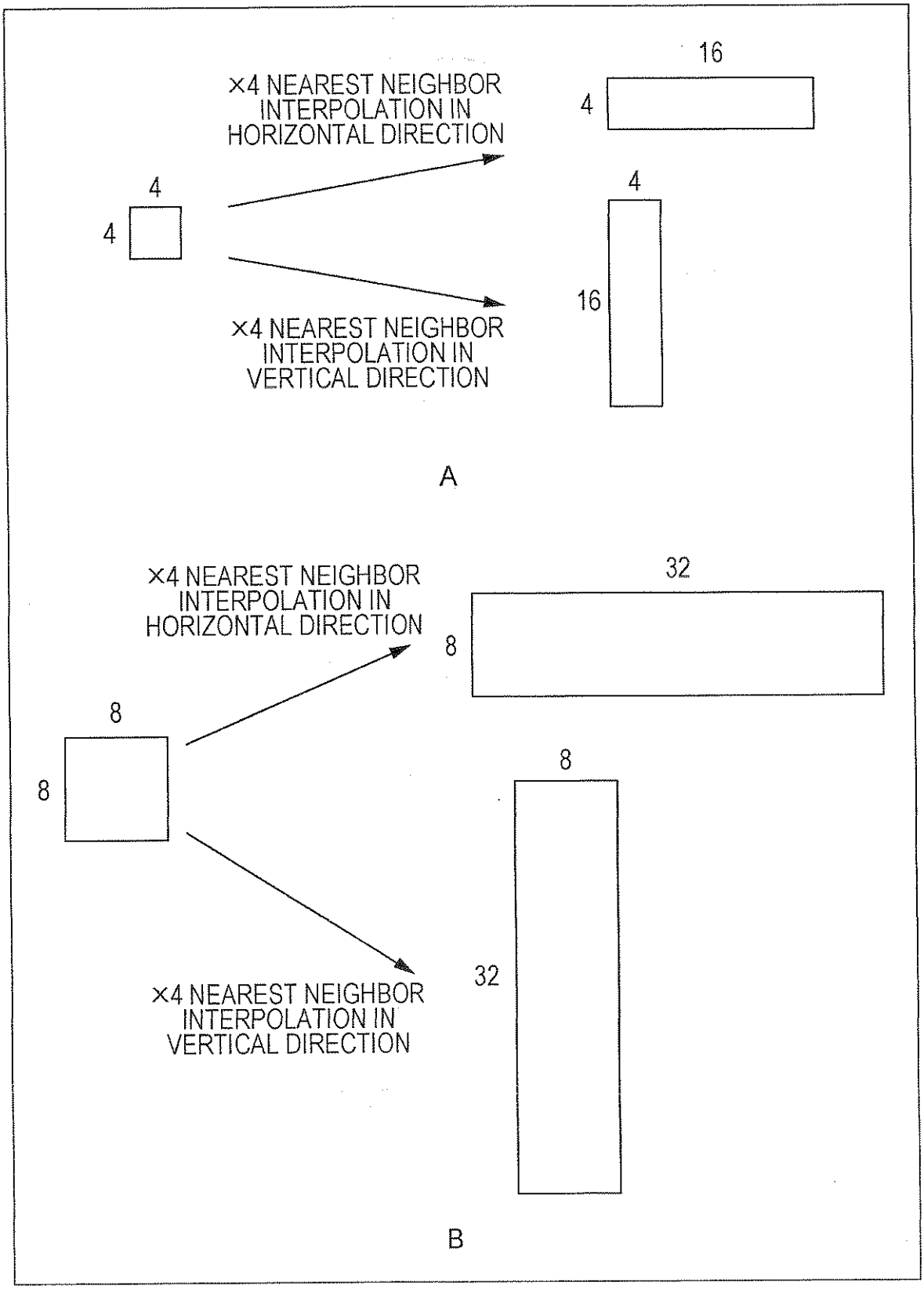
×4 NEAREST NEIGHBOR INTERPOLATION IN HORIZONTAL DIRECTION
×4 NEAREST NEIGHBOR INTERPOLATION IN VERTICAL DIRECTION
4
4
16
4
16
4
A
×4 NEAREST NEIGHBOR INTERPOLATION IN HORIZONTAL DIRECTION
×4 NEAREST NEIGHBOR INTERPOLATION IN VERTICAL DIRECTION
8
8
32
8
32
8
B

FIG. 28

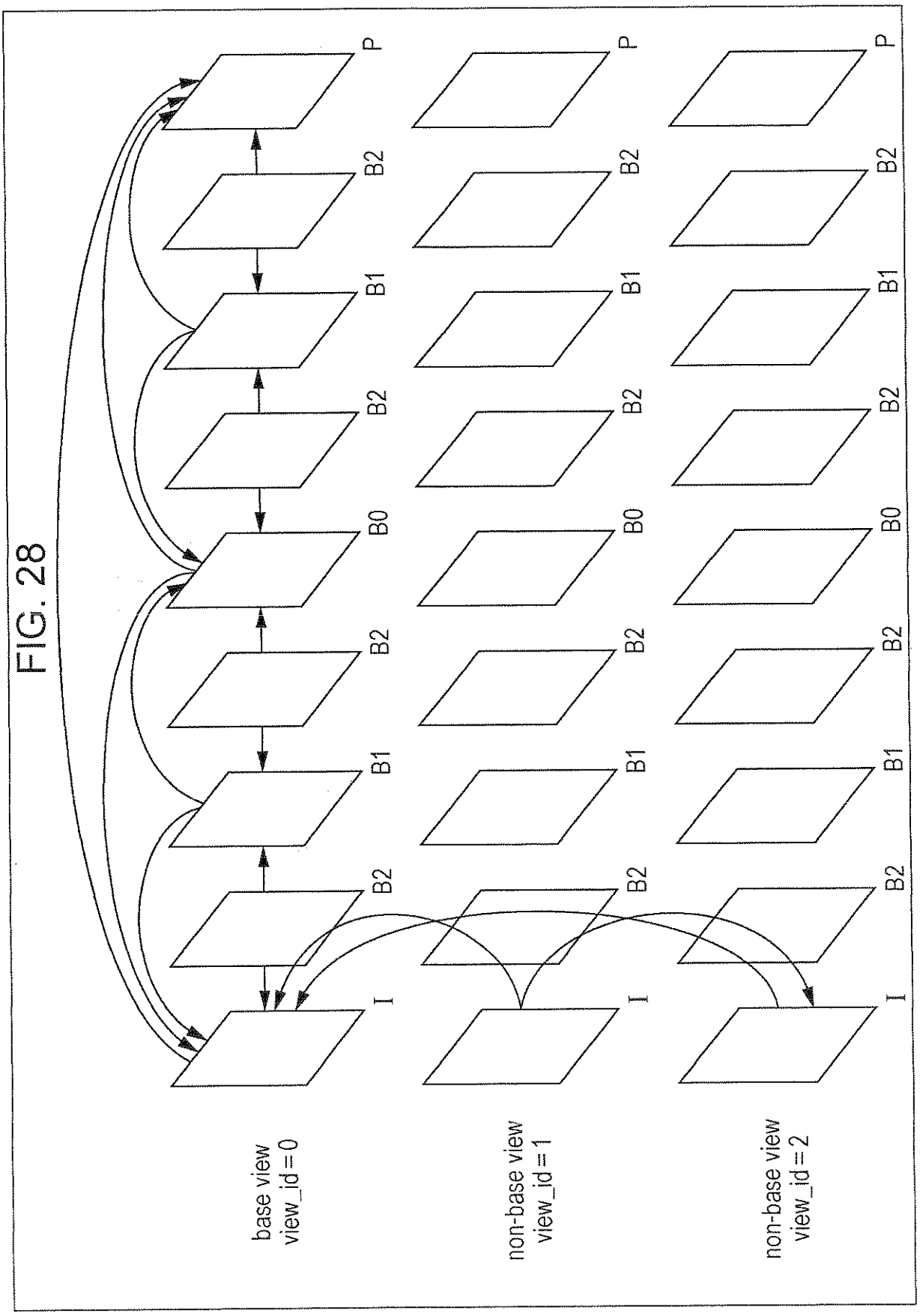
P
B2
B1
B2
B0
B2
B1
B2
I
base view
view_id = 0
non-base view
view_id = 1
non-base view
view_id = 2

FIG. 29

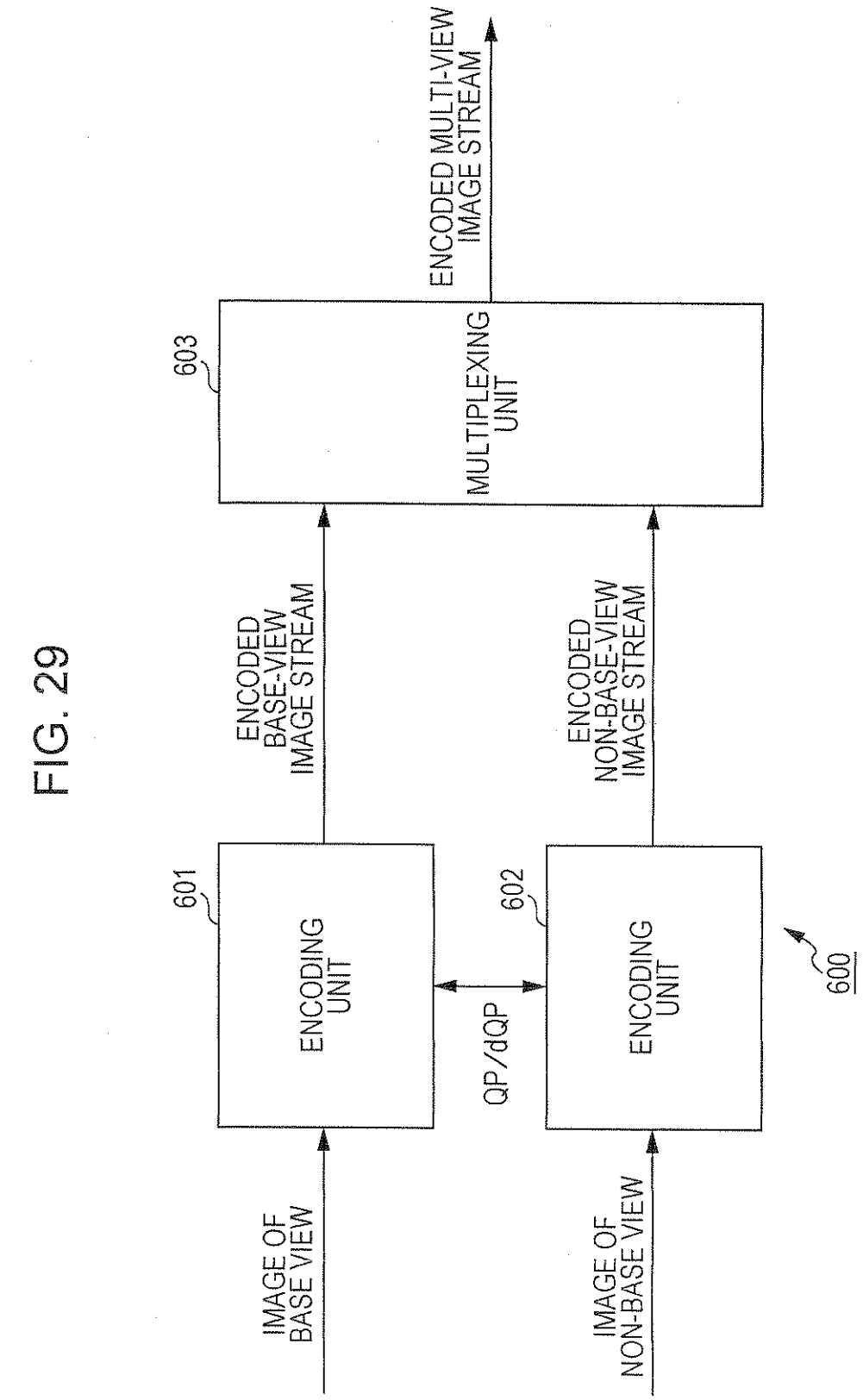
IMAGE OF BASE VIEW
IMAGE OF NON-BASE VIEW
601
ENCODING UNIT
602
ENCODING UNIT
QP/dQP
600
ENCODED BASE-VIEW IMAGE STREAM
ENCODED NON-BASE-VIEW IMAGE STREAM
603
MULTIPLEXING UNIT
ENCODED MULTI-VIEW IMAGE STREAM

FIG. 30

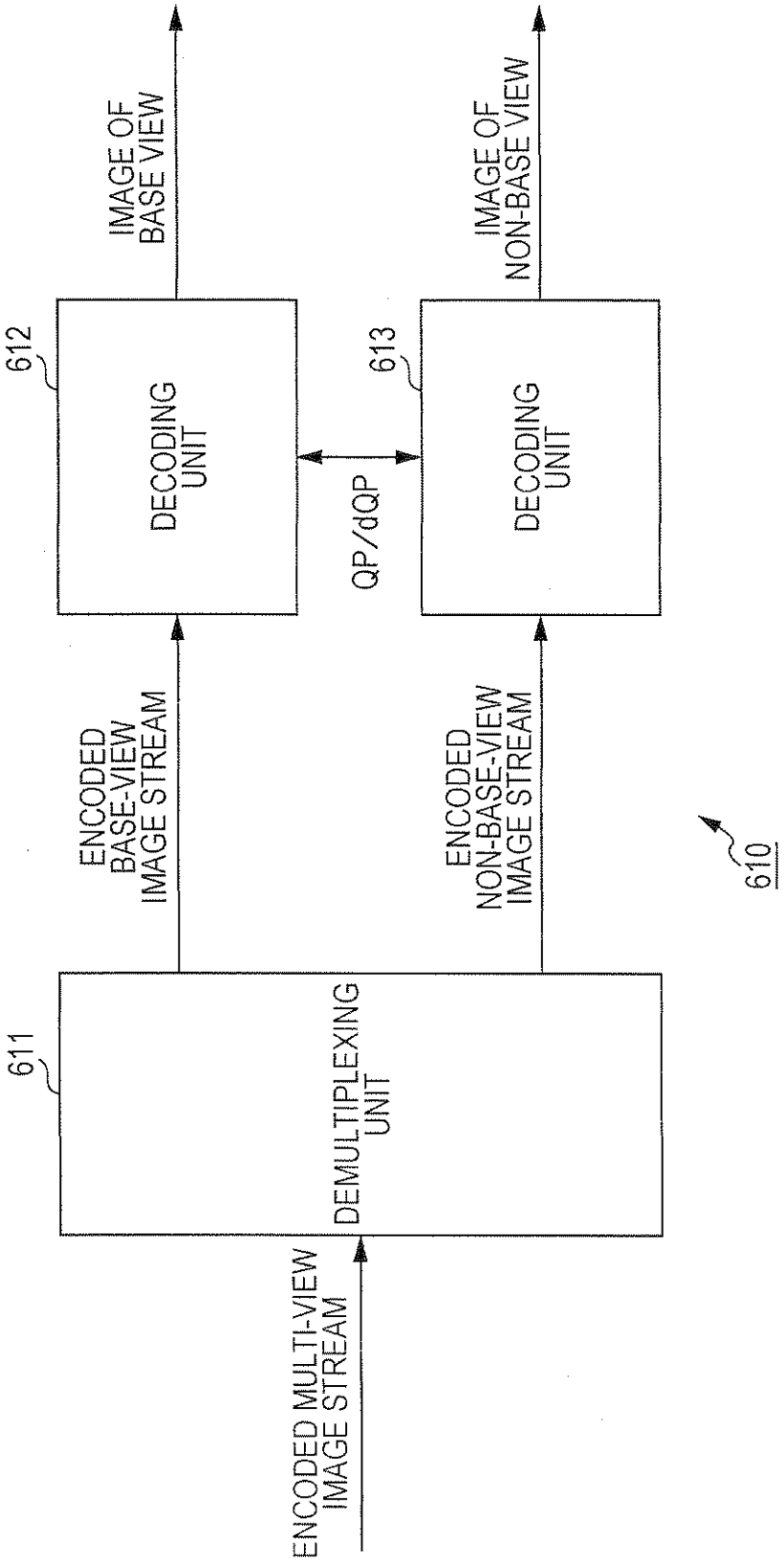
ENCODED MULTI-VIEW IMAGE STREAM
611
DEMULTIPLEXING UNIT
ENCODED BASE-VIEW IMAGE STREAM
ENCODED NON-BASE-VIEW IMAGE STREAM
612
DECODING UNIT
613
DECODING UNIT
QP/dQP
IMAGE OF BASE VIEW
IMAGE OF NON-BASE VIEW
610

FIG. 31

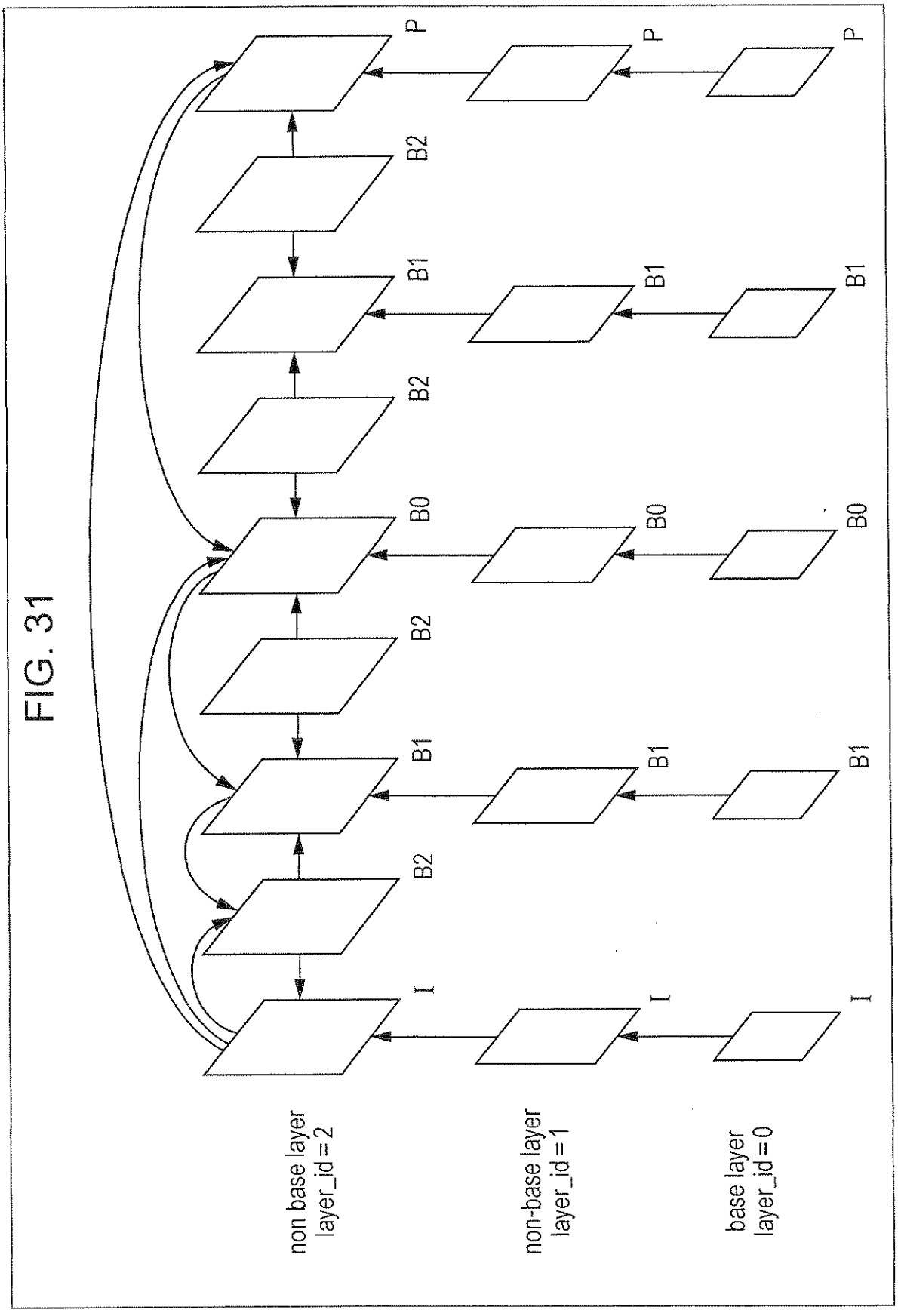
P
P
P
B2
B1
B1
B1
B2
B0
B0
B0
B2
B1
B1
B1
B2
I
I
I
non base layer
layer_id = 2
non-base layer
layer_id = 1
base layer
layer_id = 0

FIG. 32

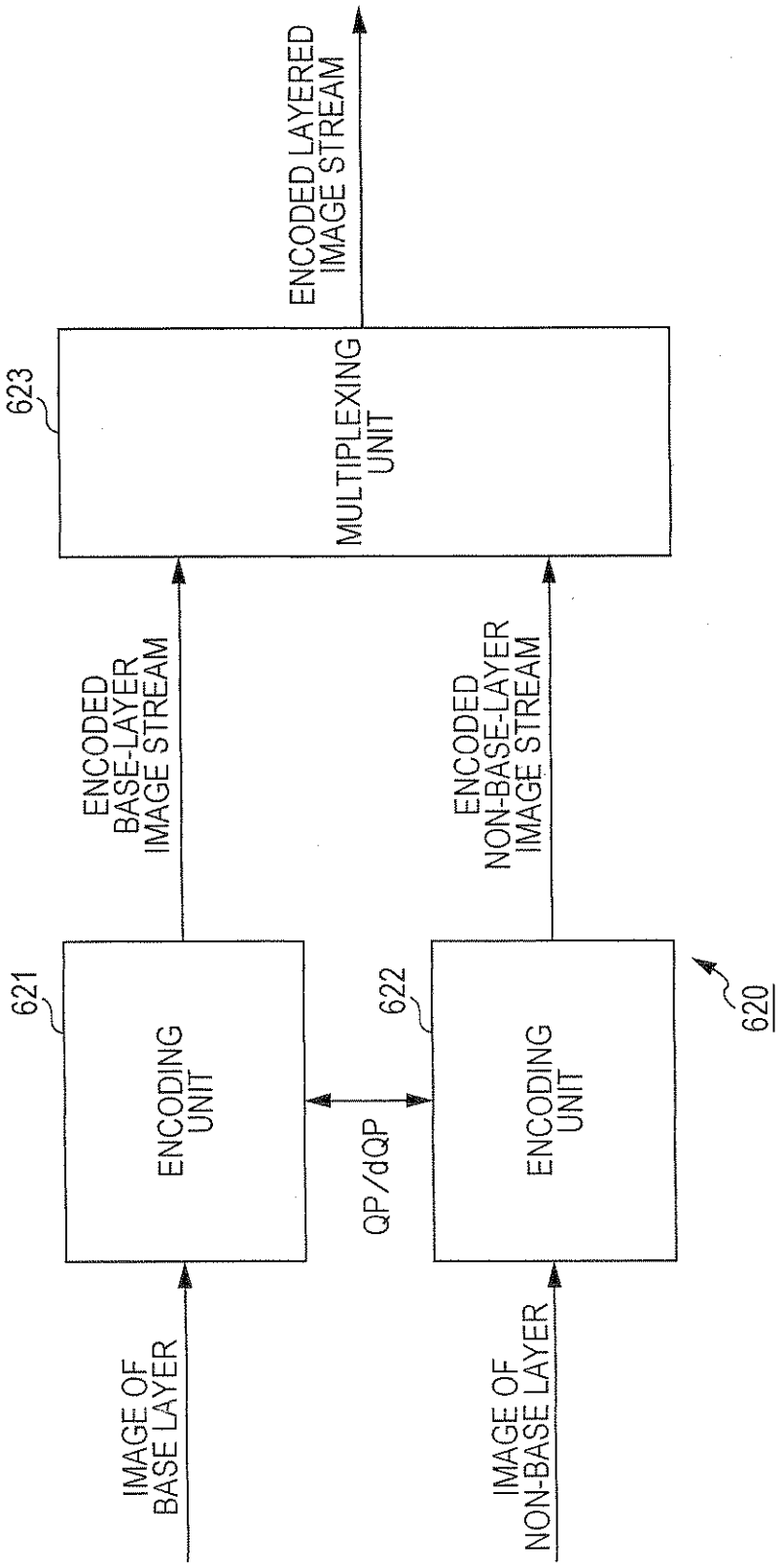
IMAGE OF BASE LAYER
IMAGE OF NON-BASE LAYER
621
ENCODING UNIT
622
ENCODING UNIT
620
QP/dQP
ENCODED BASE-LAYER IMAGE STREAM
ENCODED NON-BASE-LAYER IMAGE STREAM
623
MULTIPLEXING UNIT
ENCODED LAYERED IMAGE STREAM

FIG. 33

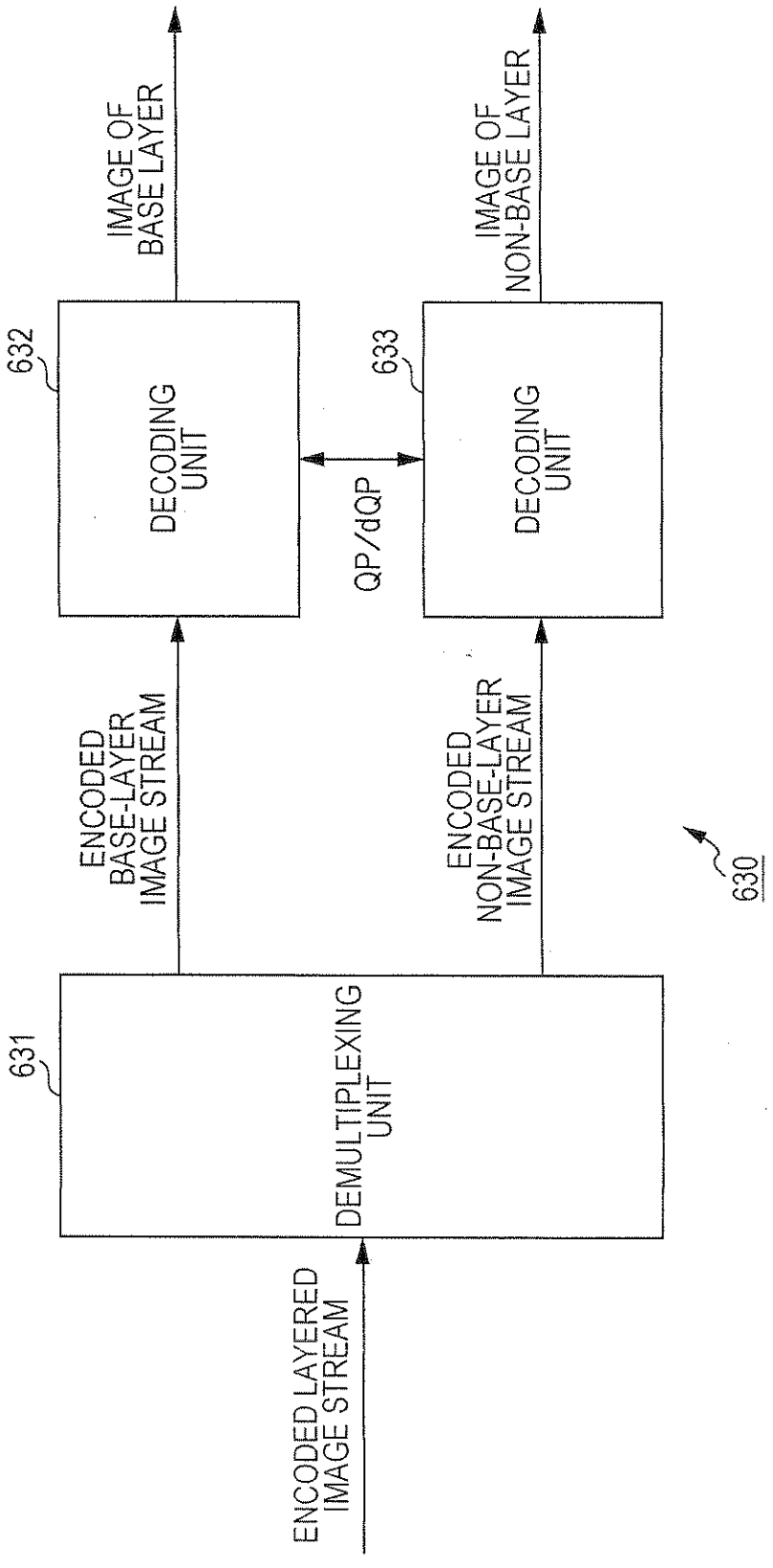
ENCODED LAYERED IMAGE STREAM
631
DEMULTIPLEXING UNIT
ENCODED BASE-LAYER IMAGE STREAM
ENCODED NON-BASE-LAYER IMAGE STREAM
632
DECODING UNIT
633
DECODING UNIT
QP/dQP
IMAGE OF BASE LAYER
IMAGE OF NON-BASE LAYER
630

FIG. 34

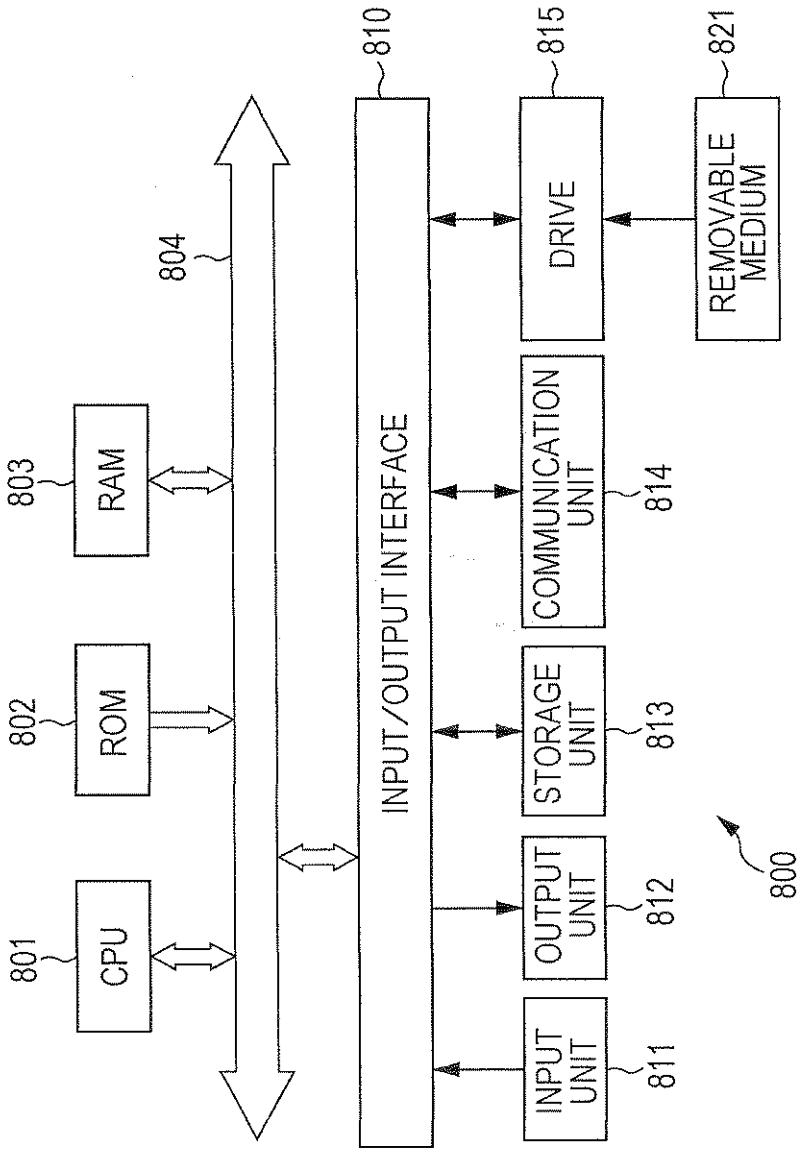
800
801
CPU
802
ROM
803
RAM
804
810
INPUT/OUTPUT INTERFACE
811
INPUT UNIT
812
OUTPUT UNIT
813
STORAGE UNIT
814
COMMUNICATION UNIT
815
DRIVE
821
REMOVABLE MEDIUM

FIG. 35

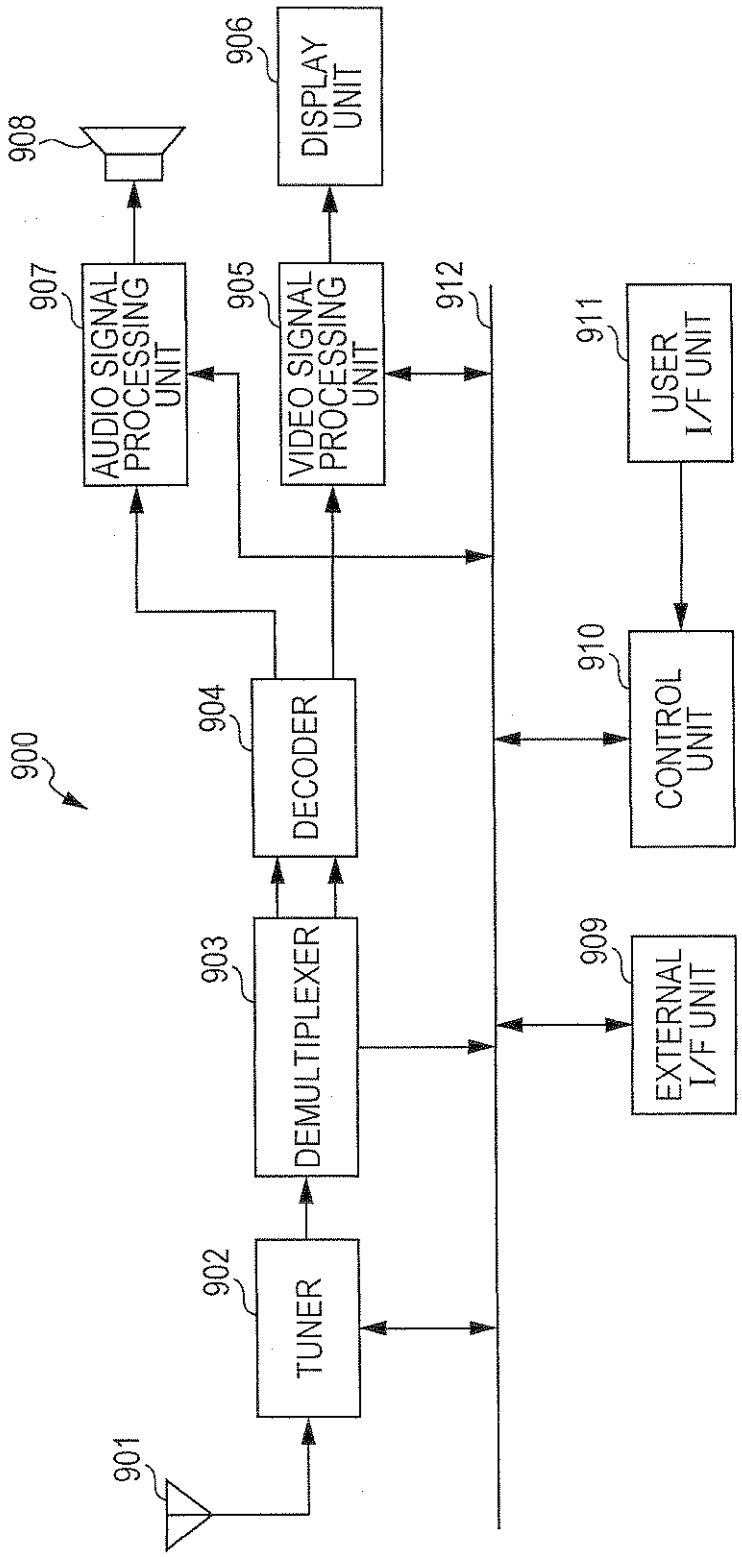
900
901
902
TUNER
903
DEMULTIPLEXER
904
DECODER
905
VIDEO SIGNAL PROCESSING UNIT
906
DISPLAY UNIT
907
AUDIO SIGNAL PROCESSING UNIT
908
909
EXTERNAL I/F UNIT
910
CONTROL UNIT
911
USER I/F UNIT
912

FIG. 36

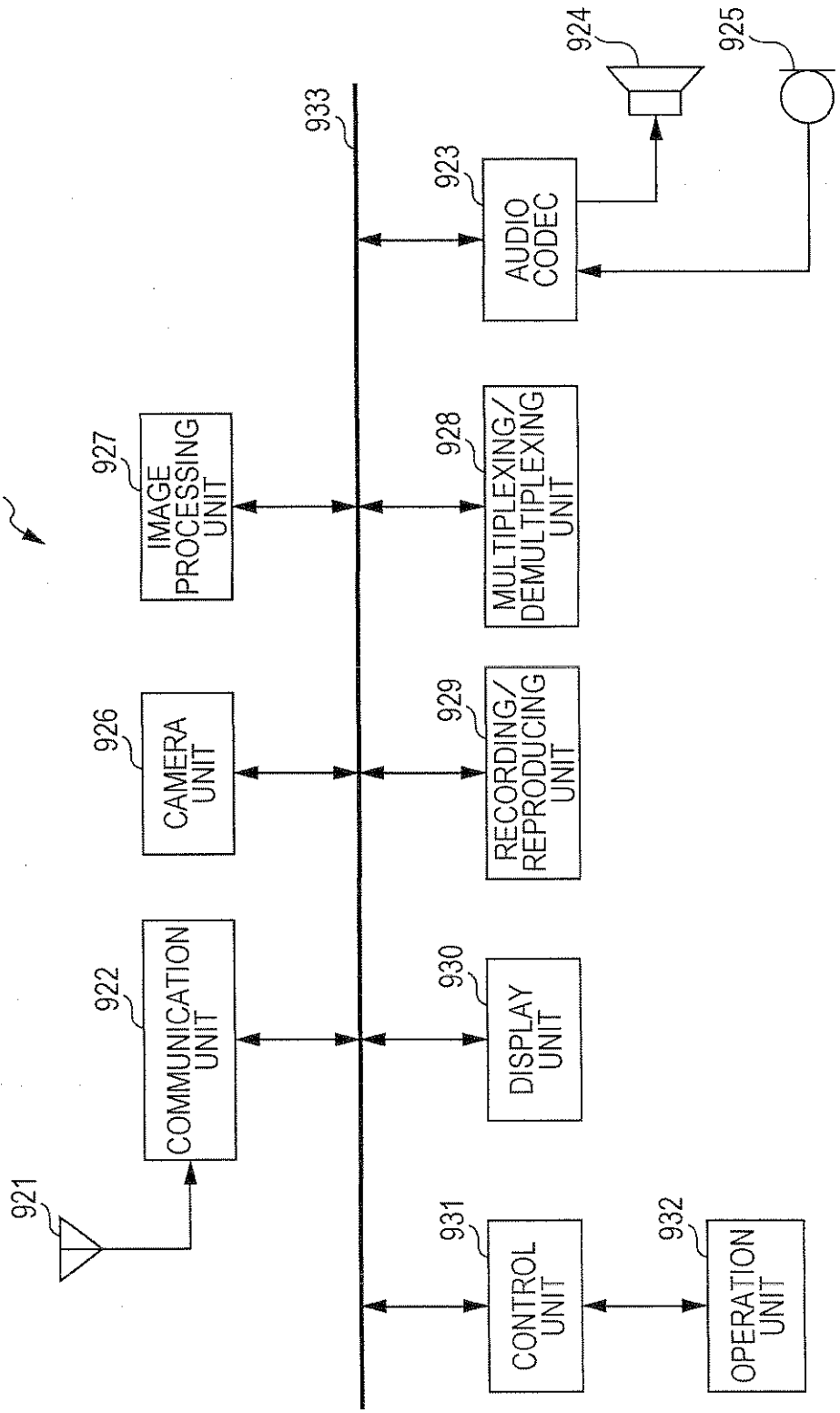
920
921
922
COMMUNICATION UNIT
926
CAMERA UNIT
927
IMAGE PROCESSING UNIT
929
RECORDING/ REPRODUCING UNIT
928
MULTIPLEXING/ DEMULTIPLEXING UNIT
930
DISPLAY UNIT
923
AUDIO CODEC
924
925
931
CONTROL UNIT
932
OPERATION UNIT
933

FIG. 37

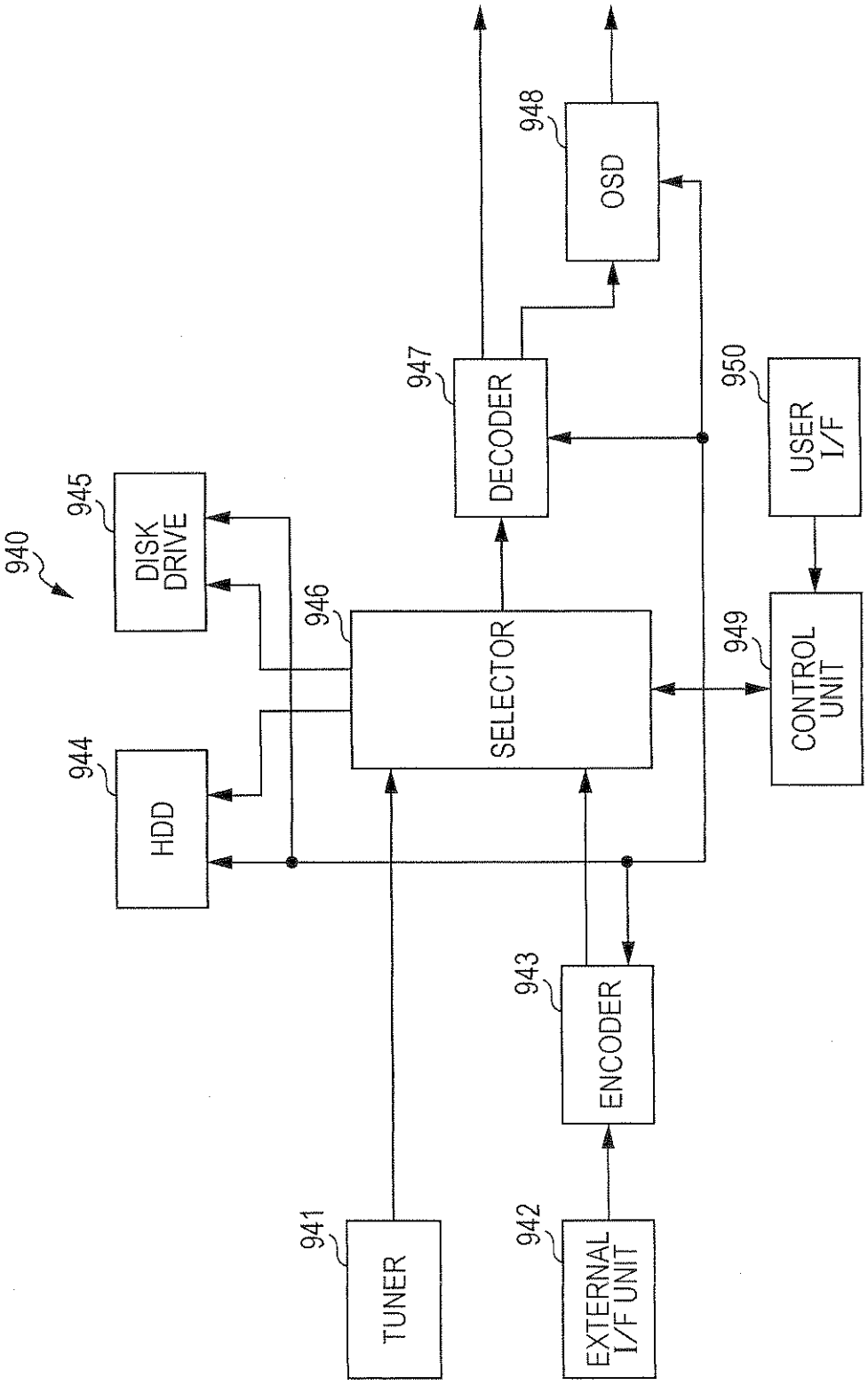
940
941
TUNER
942
EXTERNAL I/F UNIT
943
ENCODER
944
HDD
945
DISK DRIVE
946
SELECTOR
947
DECODER
948
OSD
949
CONTROL UNIT
950
USER I/F

FIG. 38

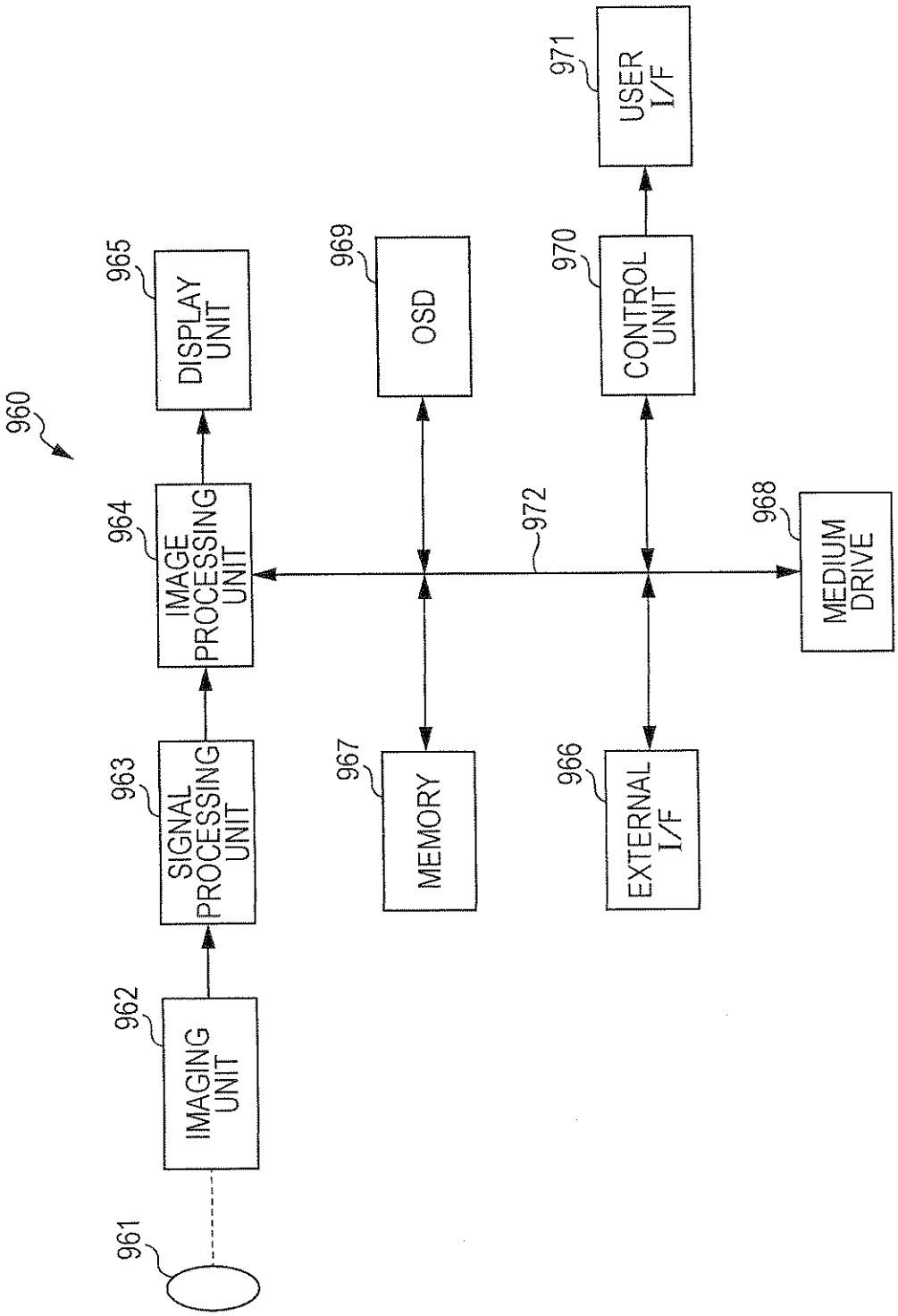
960
961
962
IMAGING UNIT
963
SIGNAL PROCESSING UNIT
964
IMAGE PROCESSING UNIT
965
DISPLAY UNIT
966
EXTERNAL I/F
967
MEMORY
968
MEDIUM DRIVE
969
OSD
970
CONTROL UNIT
971
USER I/F
972

FIG. 39

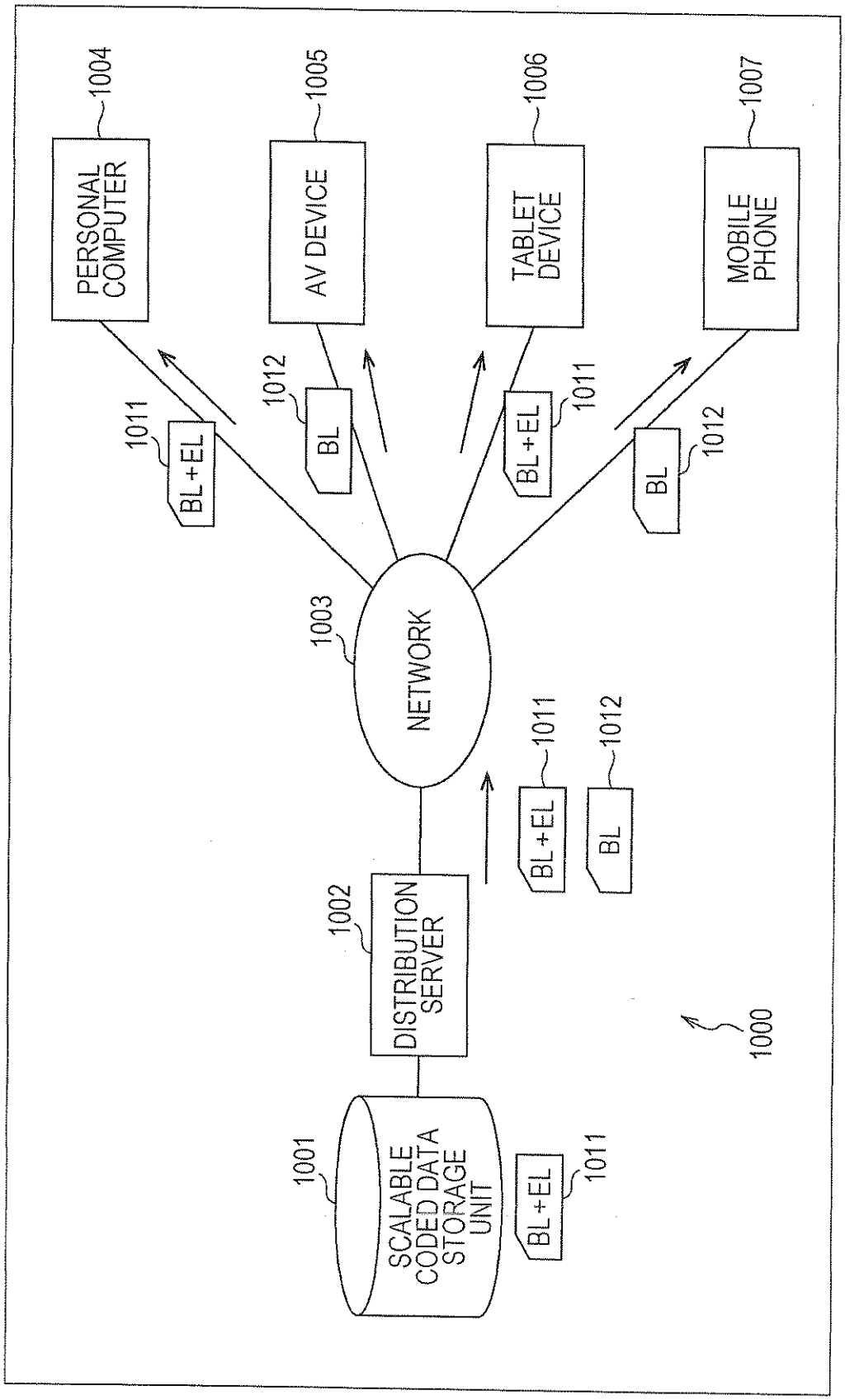
1000
SCALABLE CODED DATA STORAGE UNIT
1001
DISTRIBUTION SERVER
1002
NETWORK
1003
PERSONAL COMPUTER
1004
AV DEVICE
1005
TABLET DEVICE
1006
MOBILE PHONE
1007
BL+EL
1011
BL
1012

FIG. 40

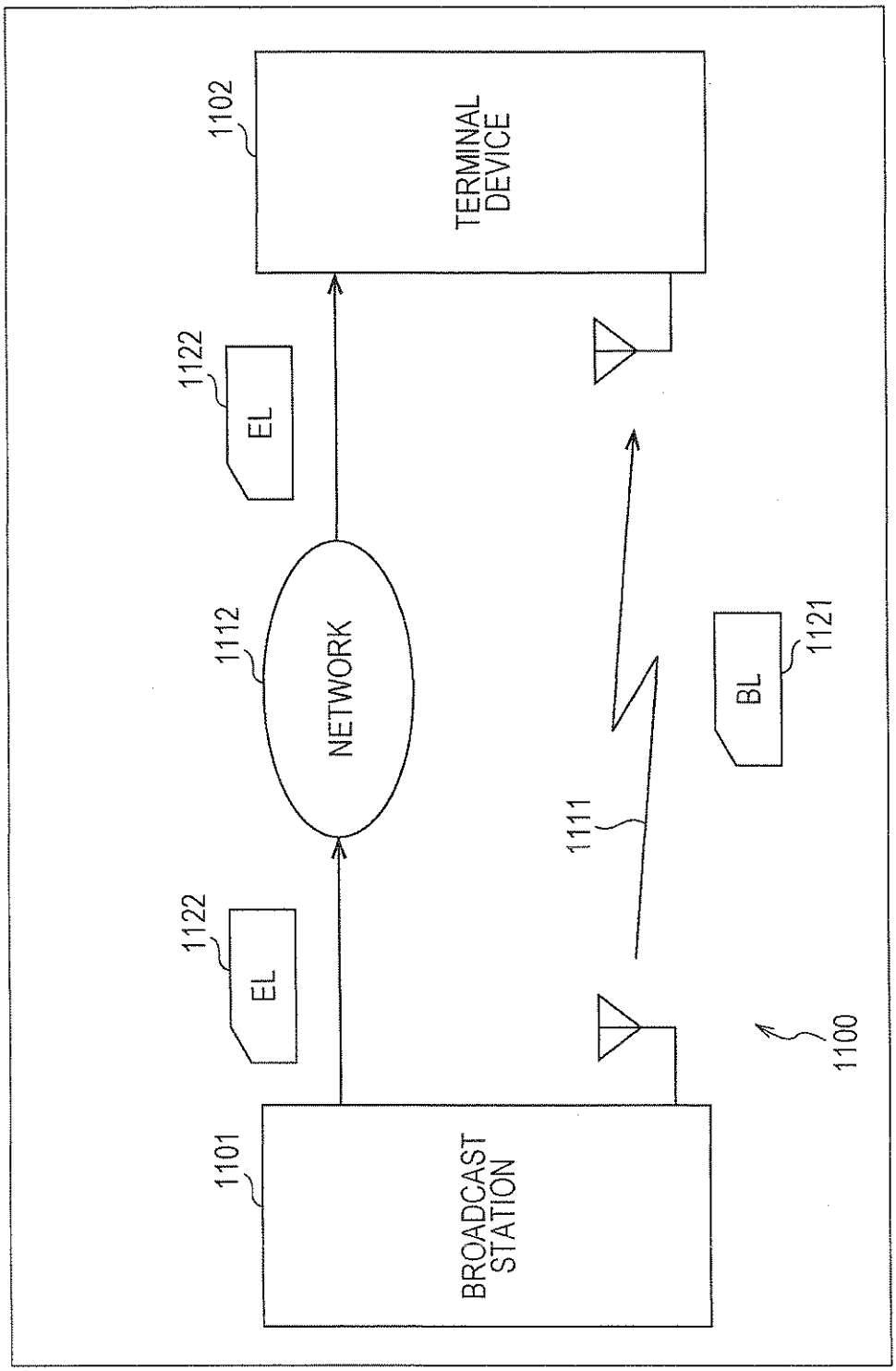
1102
TERMINAL DEVICE
1122
EL
1112
NETWORK
1122
EL
1101
BROADCAST STATION
1111
BL
1121
1100

FIG. 41

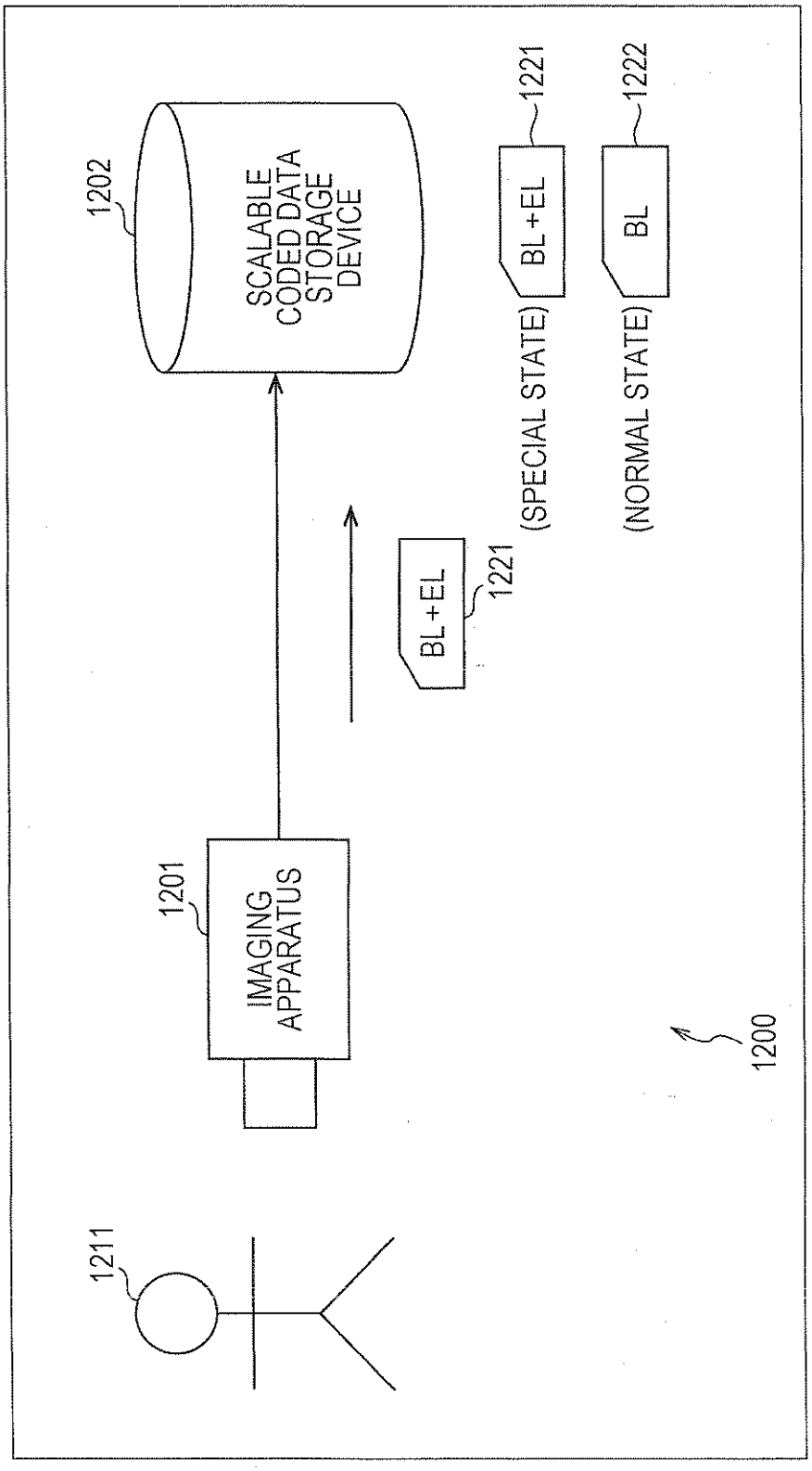
1202
SCALABLE CODED DATA STORAGE DEVICE
1221
BL + EL
(SPECIAL STATE)
1222
BL
(NORMAL STATE)
BL + EL
1221
1201
IMAGING APPARATUS
1211
1200