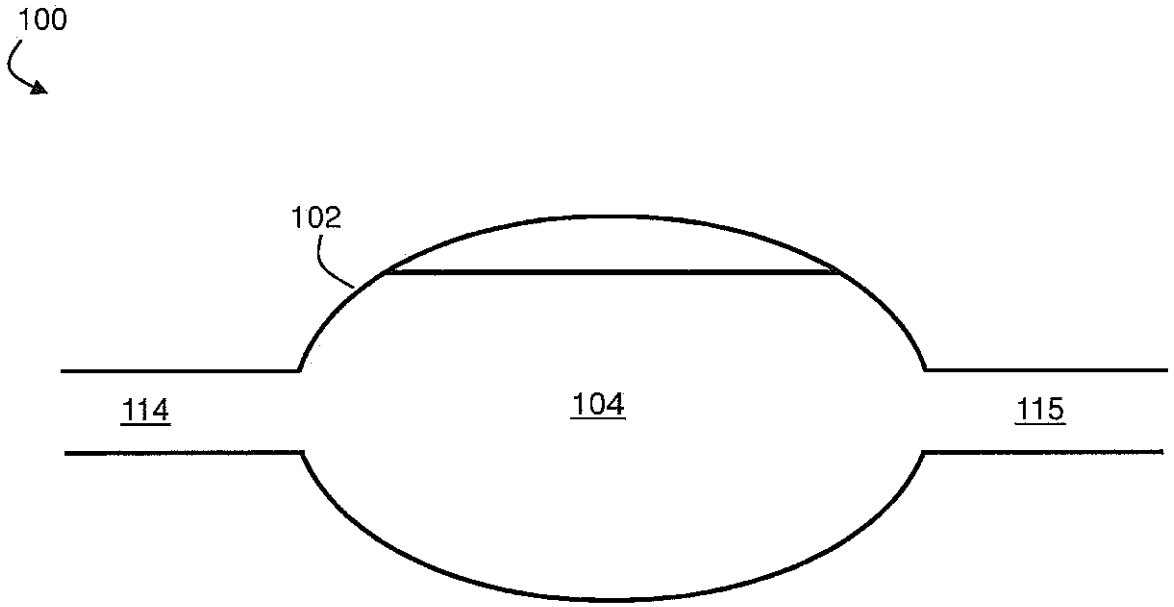

FIG. 1

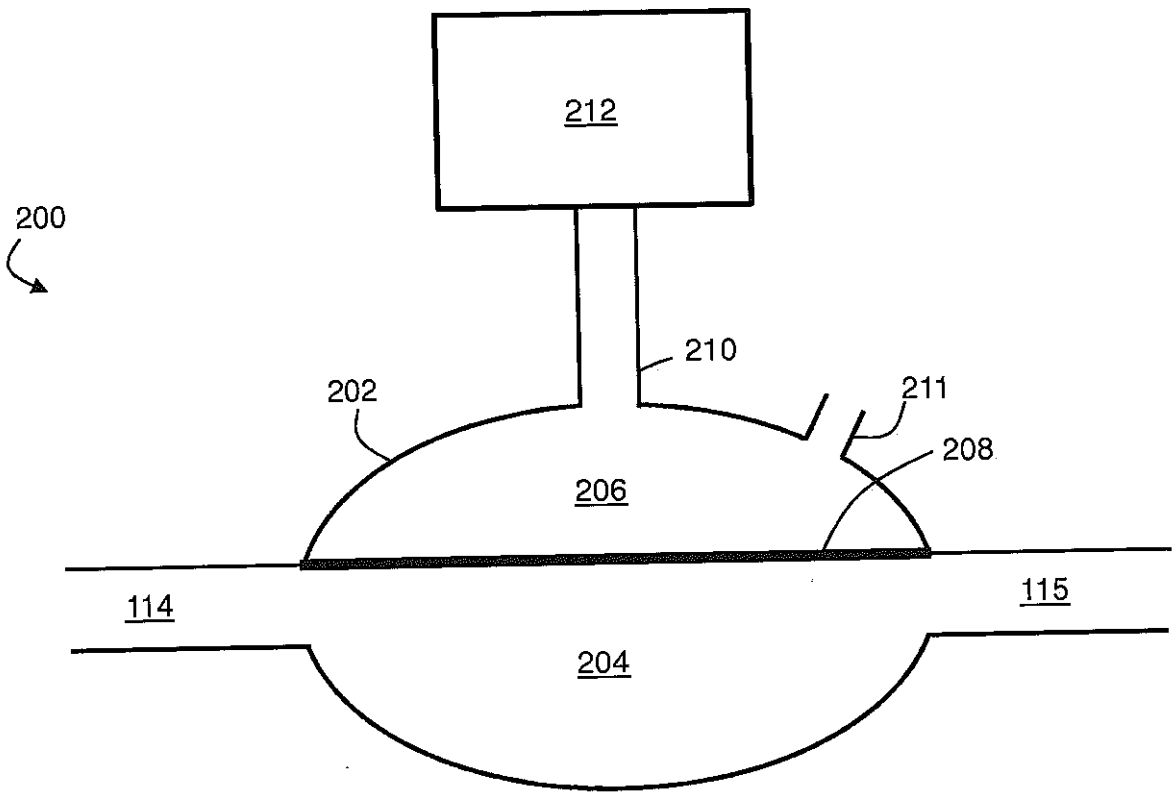

FIG. 2

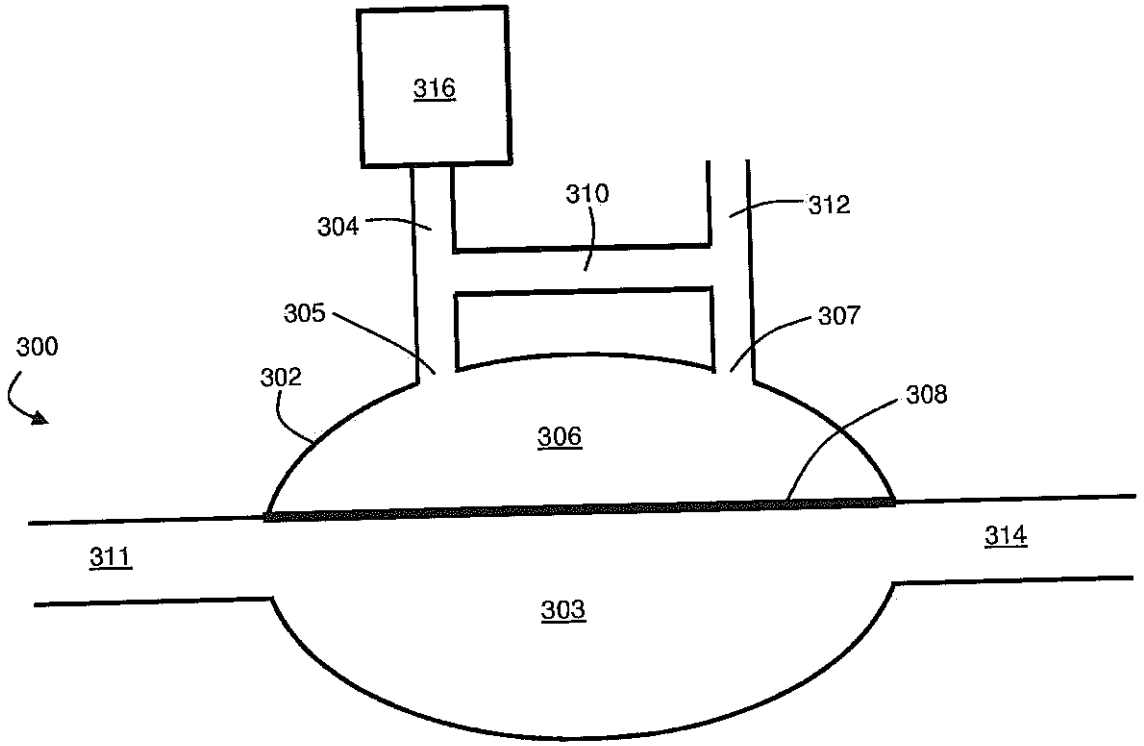
316
310
312
304
305
307
300
302
308
306
314
311
303

FIG. 3A

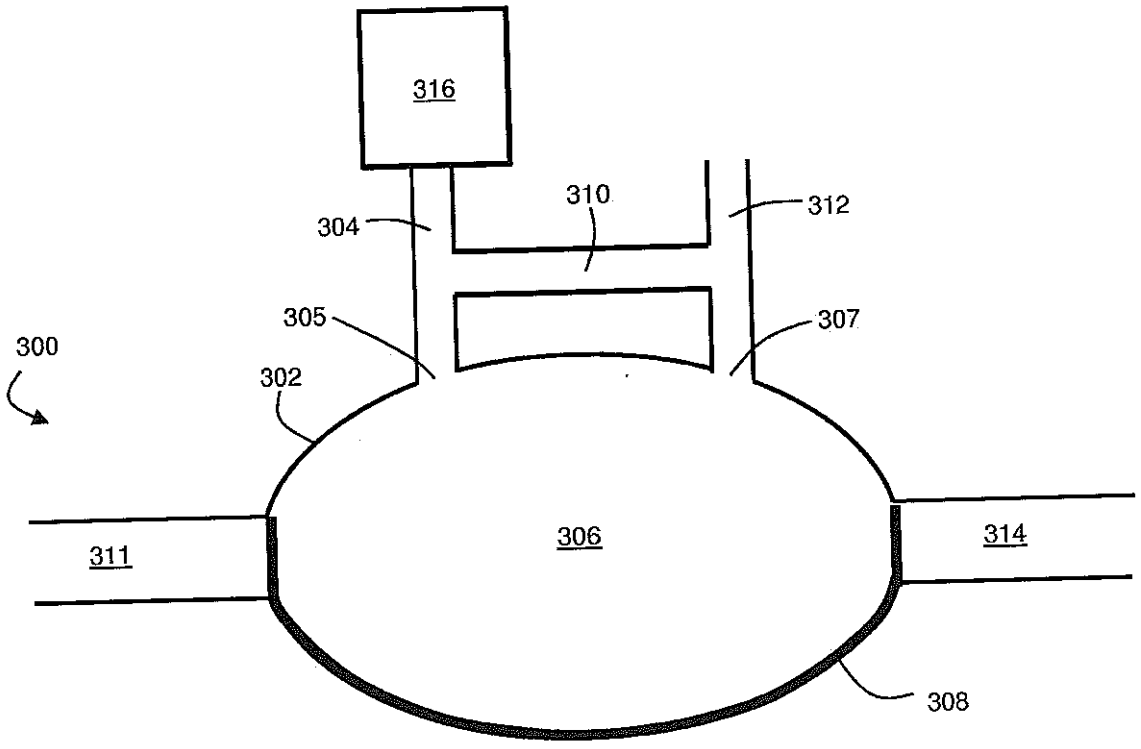
316
310
312
304
305
307
300
302
306
314
311
308

FIG. 3B

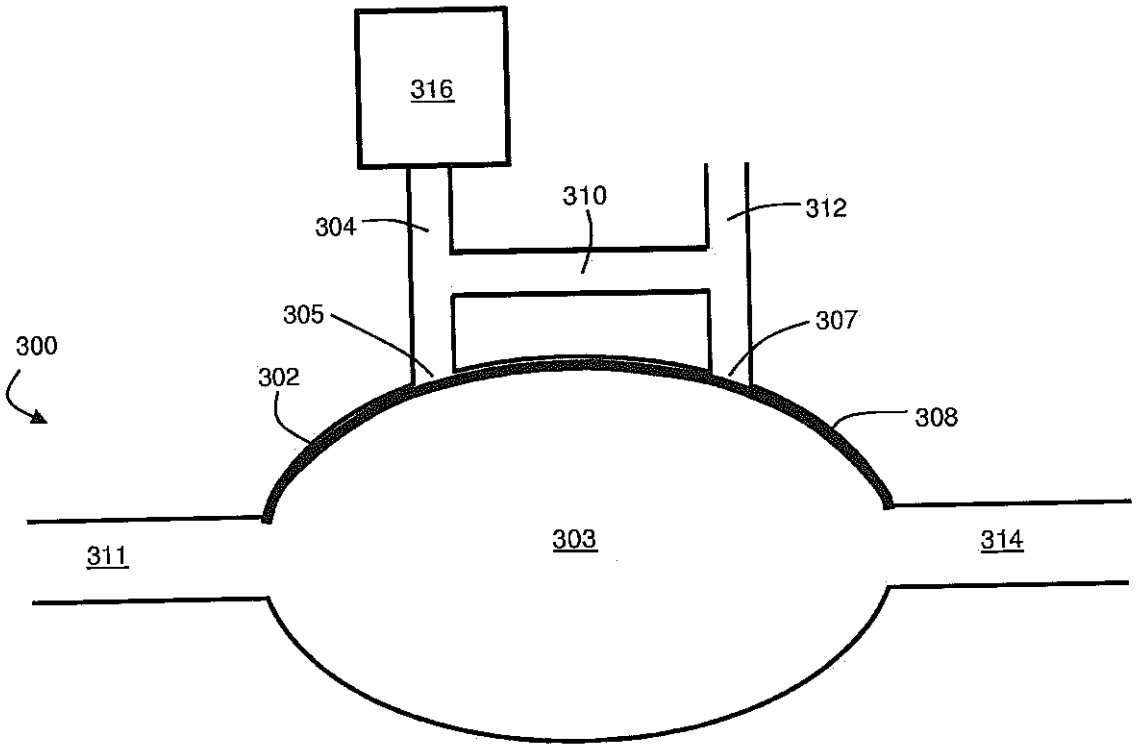
316
310
304
312
305
307
300
302
308
303
311
314

FIG. 3C

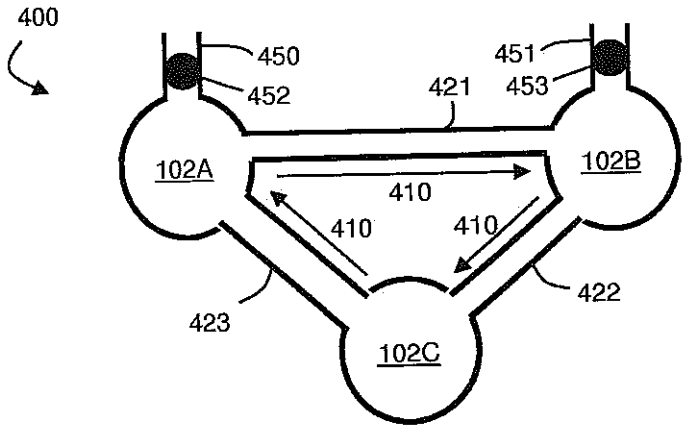
400
450
451
452
421
453
102A
102B
410
410
410
422
423
102C

FIG. 4

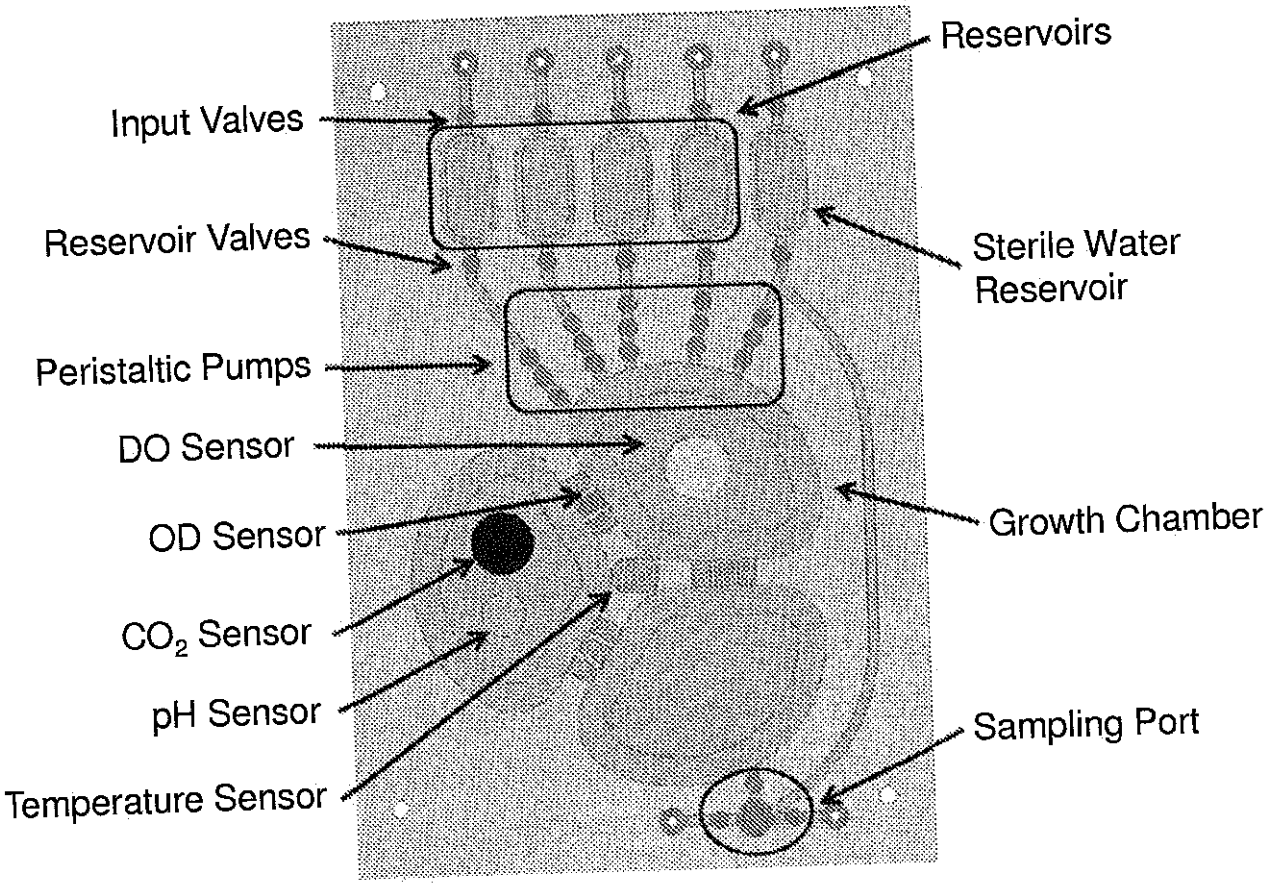
Reservoirs
Input Valves
Reservoir Valves
Sterile Water Reservoir
Peristaltic Pumps
DO Sensor
OD Sensor
Growth Chamber
CO_2 Sensor
pH Sensor
Sampling Port
Temperature Sensor

FIG. 5

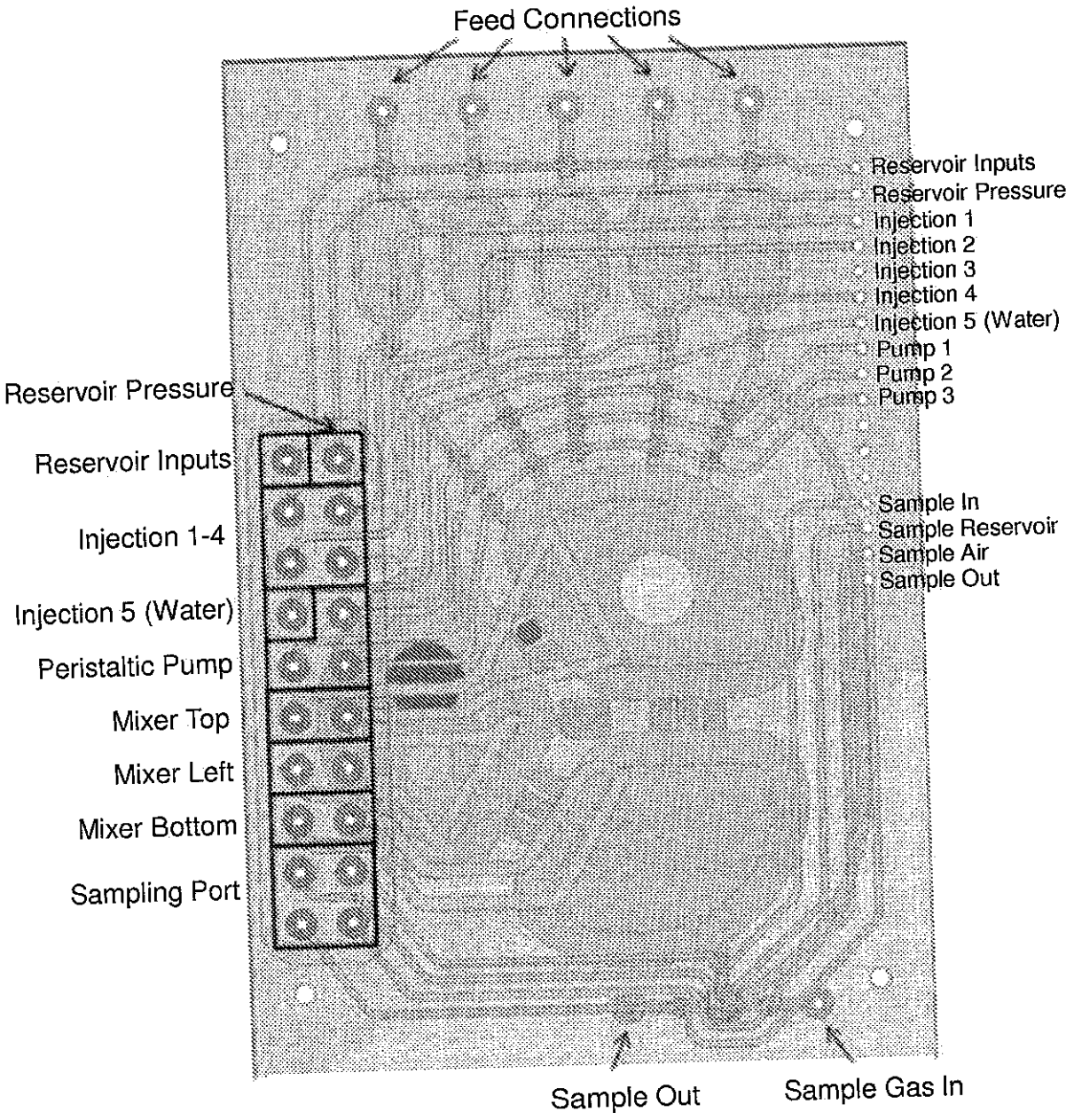
Feed Connections
Reservoir Inputs
Reservoir Pressure
Injection 1
Injection 2
Injection 3
Injection 4
Injection 5 (Water)
Pump 1
Pump 2
Pump 3
Sample In
Sample Reservoir
Sample Air
Sample Out
Reservoir Pressure
Reservoir Inputs
Injection 1-4
Injection 5 (Water)
Peristaltic Pump
Mixer Top
Mixer Left
Mixer Bottom
Sampling Port
Sample Out
Sample Gas In

FIG. 6

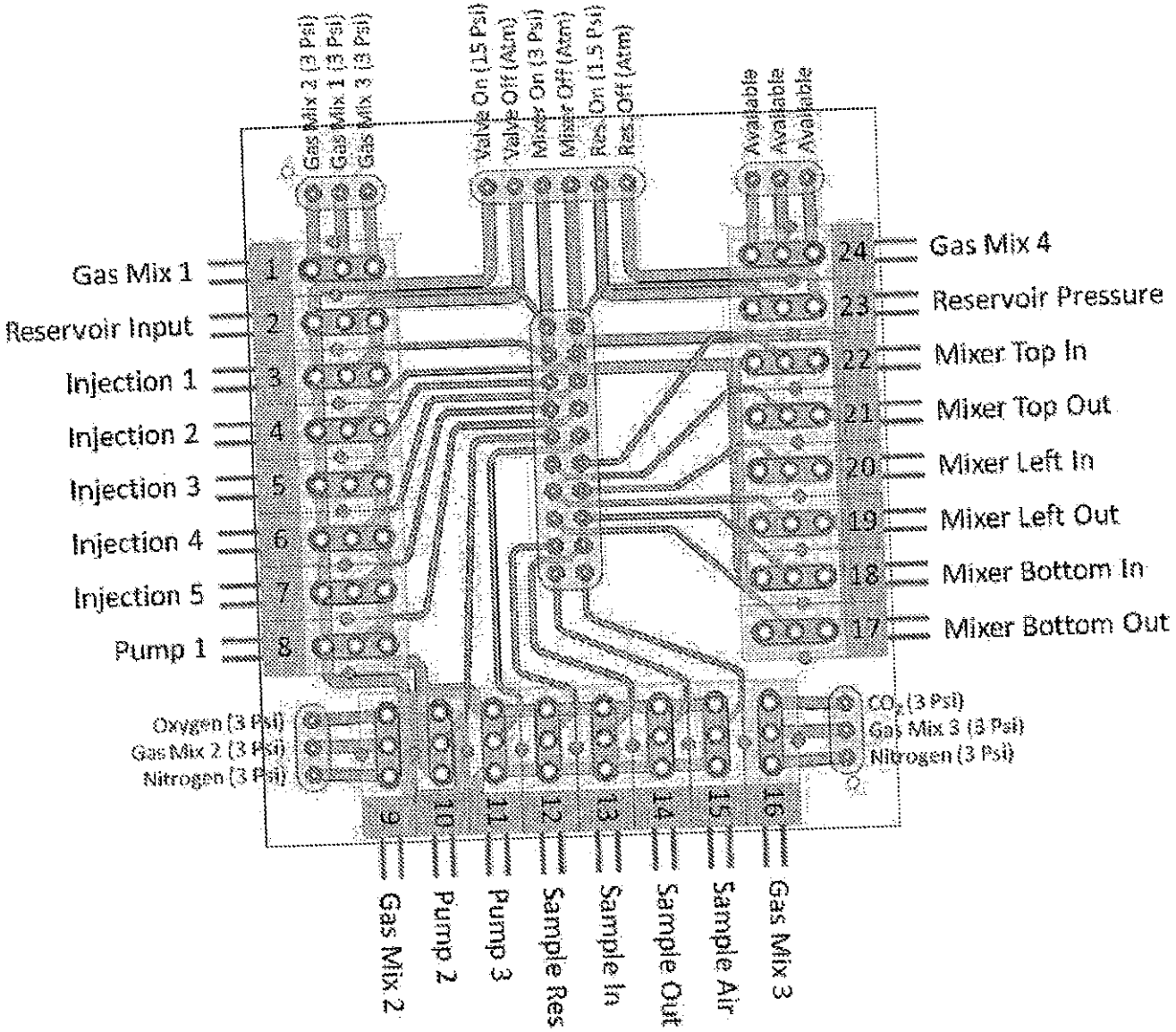
Gas Mix 2 (3 Psi)
Gas Mix 1 (3 Psi)
Gas Mix 3 (3 Psi)
Valve On (15 Psi)
Valve Off (Atm)
Mixer On (3 Psi)
Mixer Off (Atm)
Res On (15 Psi)
Res Off (Atm)
Available
Available
Available
Gas Mix 1
Reservoir Input
Injection 1
Injection 2
Injection 3
Injection 4
Injection 5
Pump 1
Gas Mix 4
Reservoir Pressure
Mixer Top In
Mixer Top Out
Mixer Left In
Mixer Left Out
Mixer Bottom In
Mixer Bottom Out
Oxygen (3 Psi)
Gas Mix 2 (3 Psi)
Nitrogen (3 Psi)
CO2 (3 Psi)
Gas Mix 3 (3 Psi)
Nitrogen (3 Psi)
Gas Mix 2
Pump 2
Pump 3
Sample Res
Sample In
Sample Out
Sample Air
Gas Mix 3

FIG. 7

Valve	Name	NO	NC
1	Gas Mix 1	Gas Mix 2 (3 Psi)	Gas Mix 3 (3Psi)
2	Reservoir Input	Valve On (15 Psi)	Valve Off (Atm)
3	Injection 1	Valve On (15 Psi)	Valve Off (Atm)
4	Injection 2	Valve On (15 Psi)	Valve Off (Atm)
5	Injection 3	Valve On (15 Psi)	Valve Off (Atm)
6	Injection 4	Valve On (15 Psi)	Valve Off (Atm)
7	Injection 5 (Water)	Valve On (15 Psi)	Valve Off (Atm)
8	Pump 1	Valve On (15 Psi)	Valve Off (Atm)

(a) Valves 1-8

Valve	Name	NO	NC
9	Gas Mix 2	Nitrogen (3 Psi)	Oxygen (3 Psi)
10	Pump 2	Valve Off (Atm)	Valve On (15 Psi)
11	Pump 3	Valve On (15 Psi)	Valve Off (Atm)
12	Sample Reservoir	Valve On (15 Psi)	Valve Off (Atm)
13	Sample In	Valve On (15 Psi)	Valve Off (Atm)
14	Sample Out	Valve On (15 Psi)	Valve Off (Atm)
15	Sample Air In	Valve On (15 Psi)	Valve Off (Atm)
16	Gas Mix 3	Nitrogen (3 Psi)	CO_2 (3 Psi)

(b) Valves 9-16

Valve	Name	NC	NC
17	Mixer Bottom Out	Mixer Off (Atm)	Blocked
18	Mixer Bottom In	Blocked	Mixer On (3 Psi)
19	Mixer Left Out	Mixer Off (Atm)	Blocked
20	Mixer Left In	Blocked	Mixer On (3 Psi)
21	Mixer Top Out	Mixer Off (Atm)	Blocked
22	Mixer Top In	Blocked	Mixer On (3 Psi)
23	Reservoir Pressure	Res. Off (Atm)	Res. On (1.5 Psi)
24	Gas Mix 4	Available	Available

(c) Valves 17-24

FIG. 8

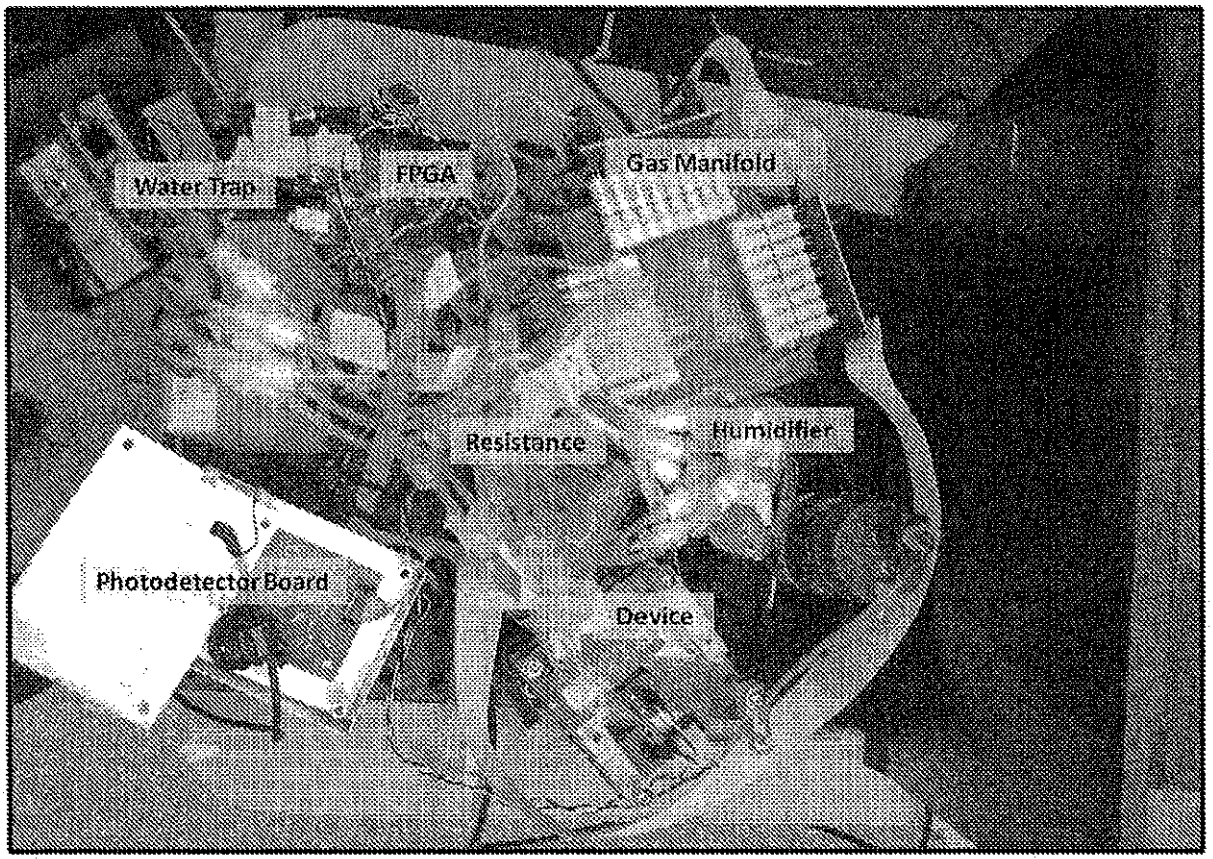
Water Trap
FPGA
Gas Manifold
Resistance
Humidifier
Photodetector Board
Device

FIG. 9

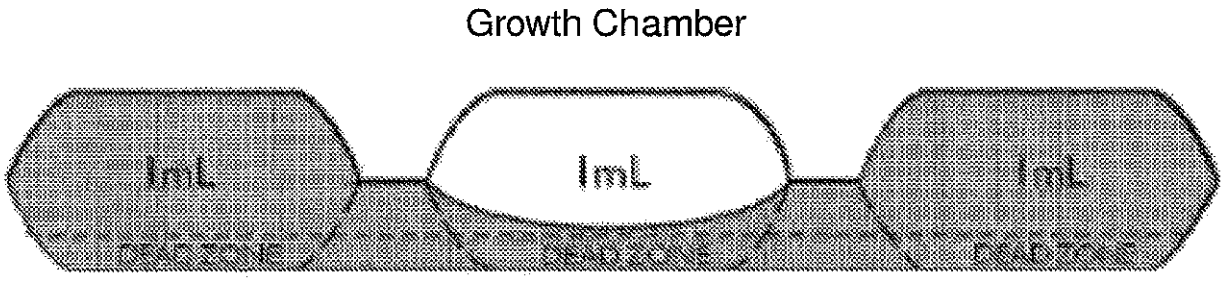

FIG. 10