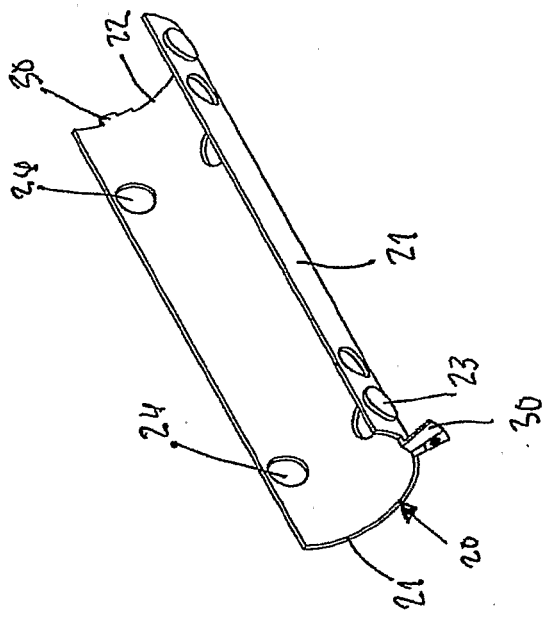


Fig 3

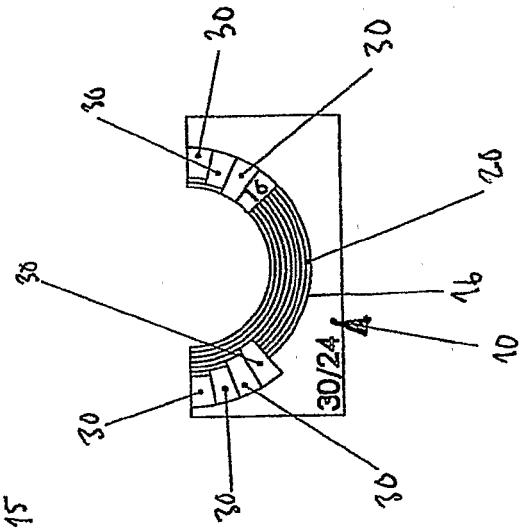


Fig 2

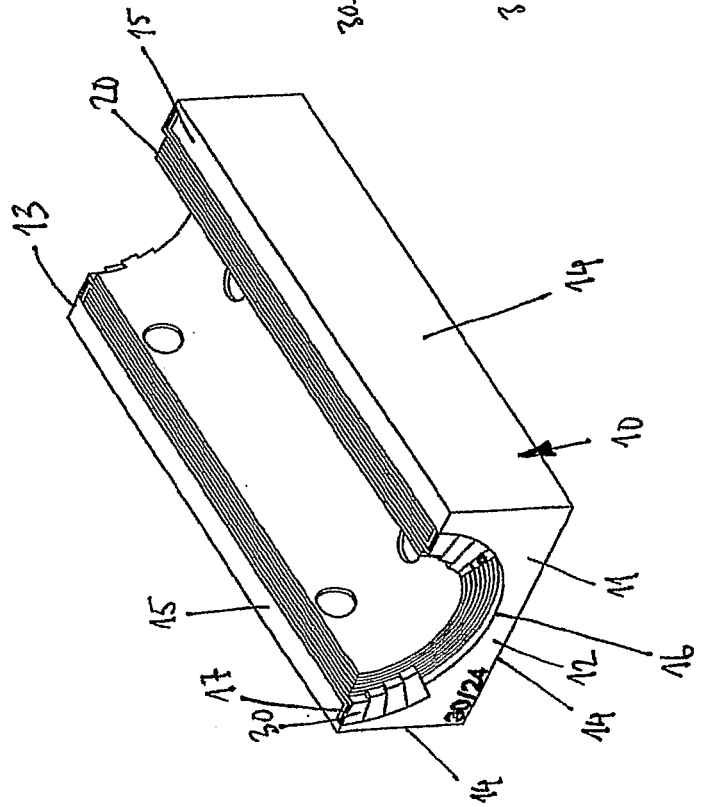


Fig 1