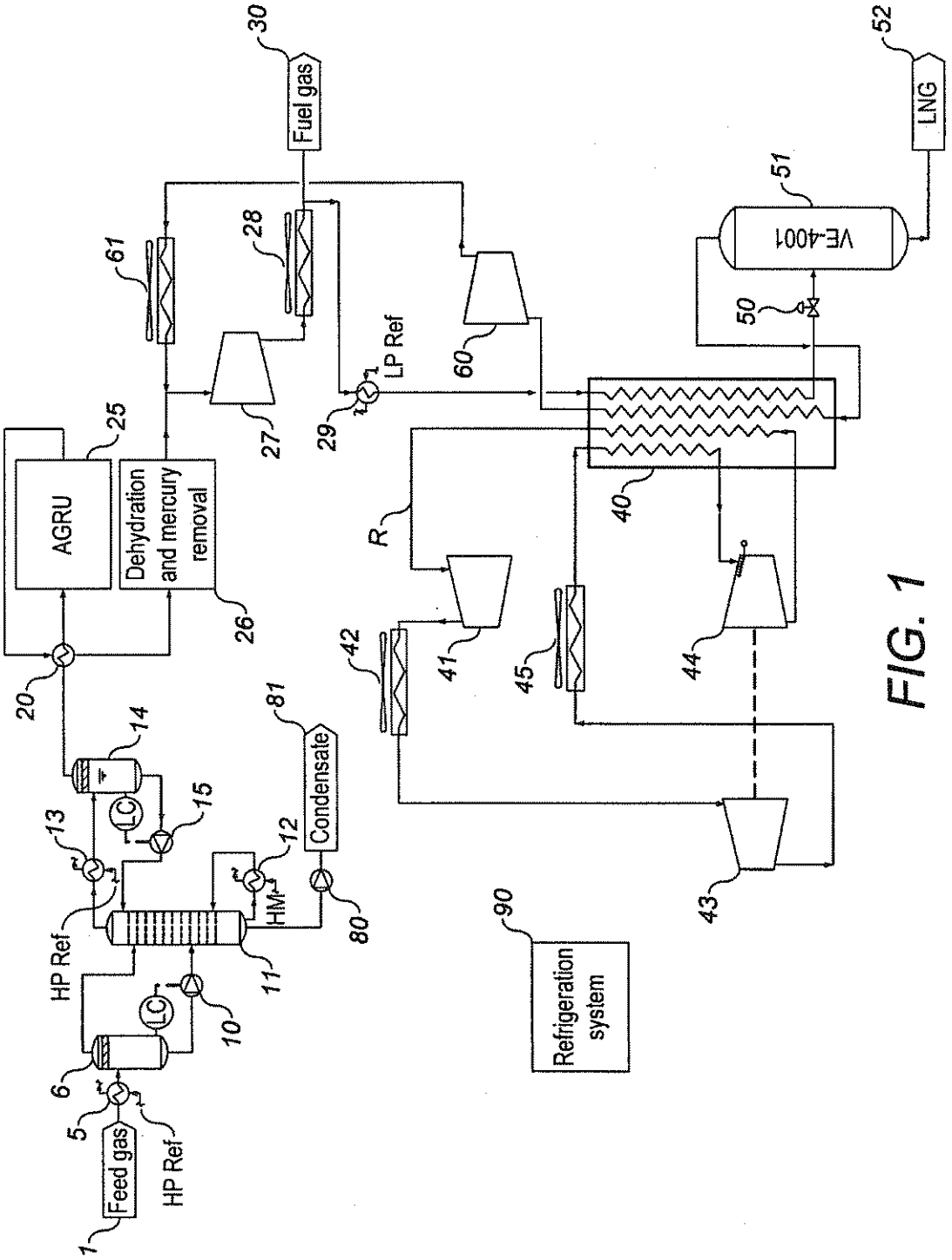
Feed gas
HP Ref
Fuel gas
AGRU
Dehydration and mercury removal
LP Ref
Condensate
HM
LC
Refrigeration system
VE-4001
LNG
R
1
5
6
10
11
12
13
14
15
20
25
26
27
28
29
30
40
41
42
43
44
45
50
51
52
60
61
80
81
90

FIG. 1

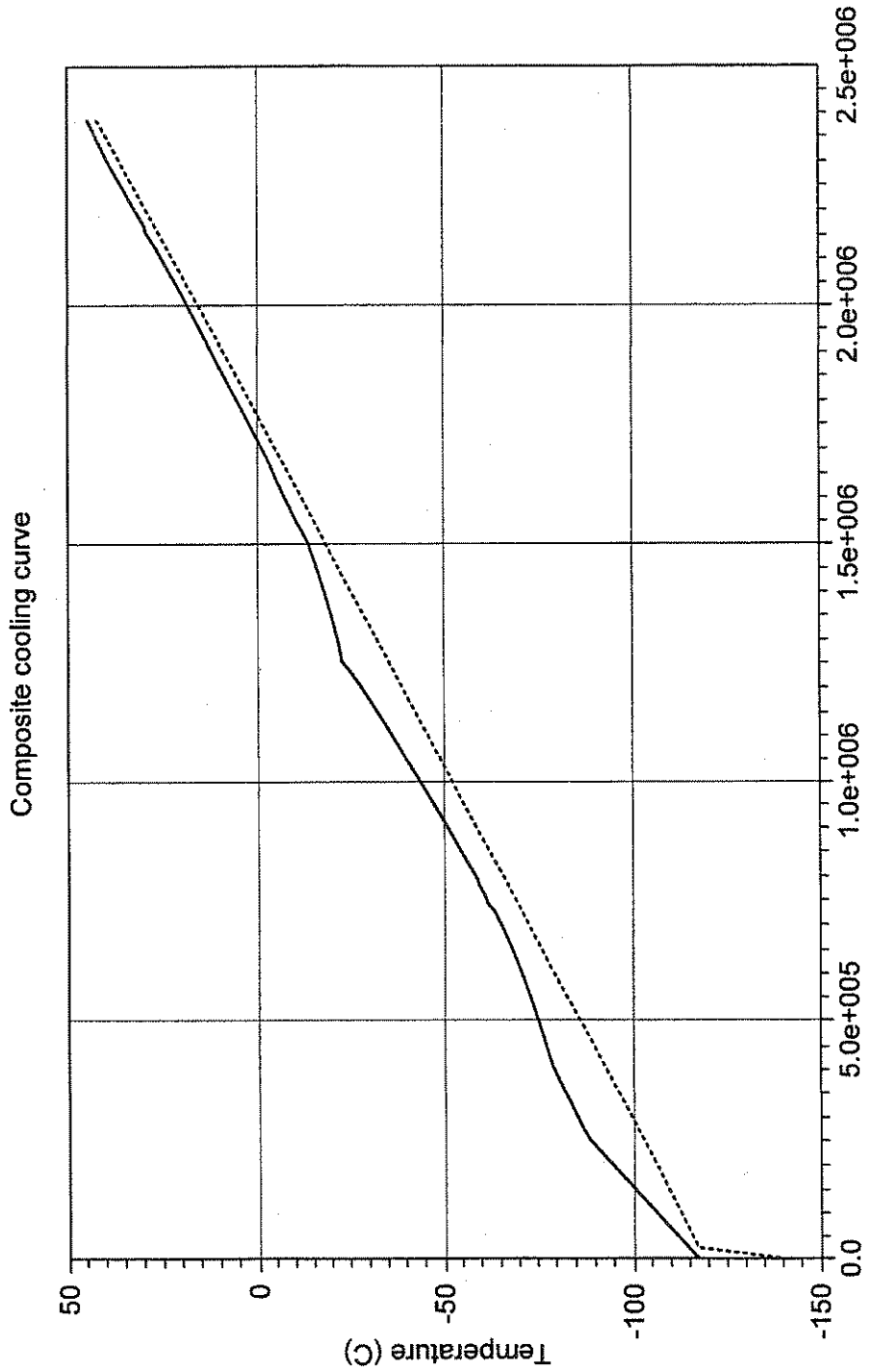
Composite cooling curve
Temperature (C)
50
0
-50
-100
-150
Heat flow
0.0
5.0e+005
1.0e+006
1.5e+006
2.0e+006
2.5e+006

FIG. 2

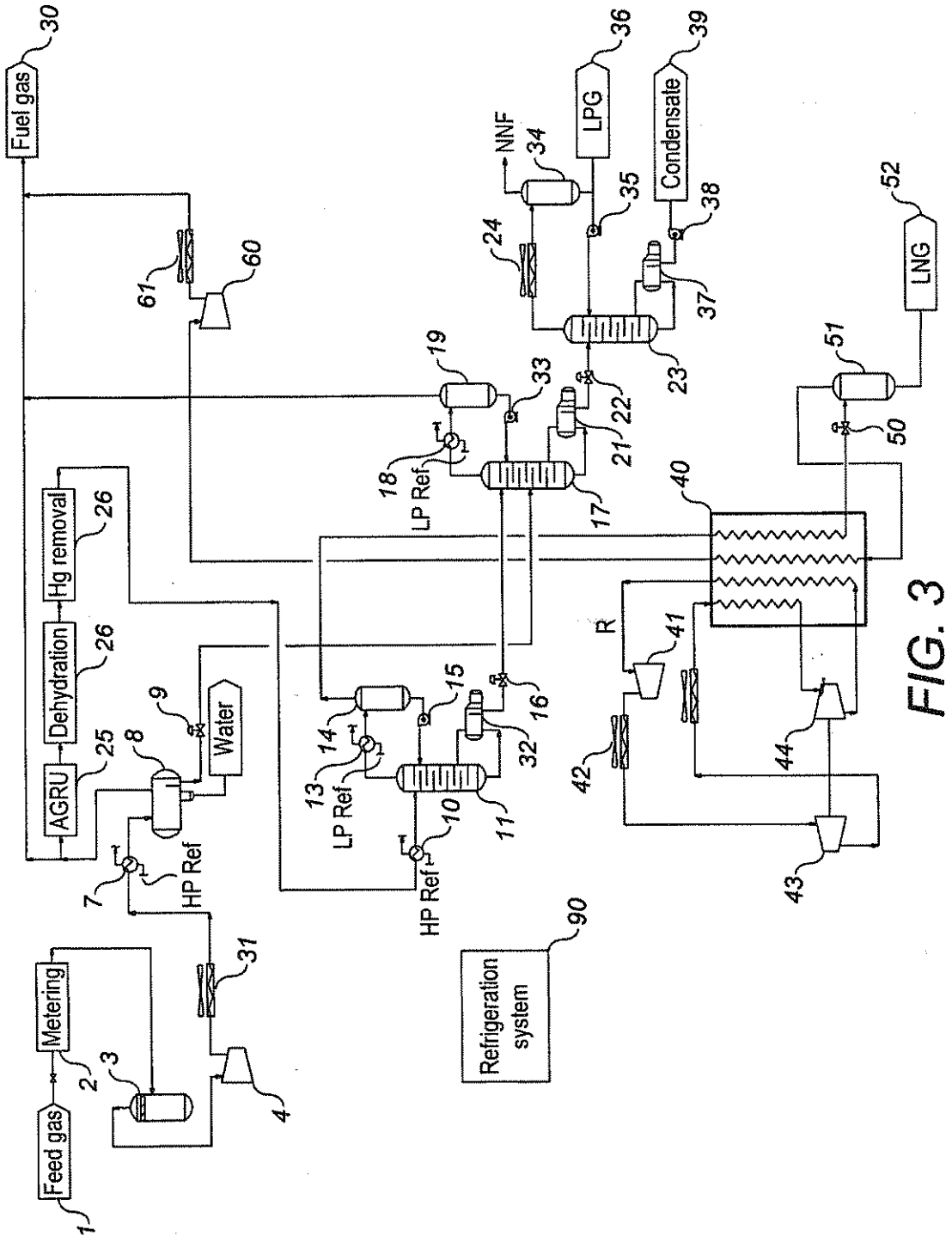
Fuel gas
30
Feed gas
1
Metering
2
3
4
Hg removal
26
Dehydration
26
AGRU
25
8
9
Water
HP Ref
7
31
LP Ref
13
14
15
16
32
10
11
HP Ref
LP Ref
18
19
33
17
21
22
23
24
NNF
34
35
LPG
36
Condensate
39
38
37
60
61
40
R
41
42
44
43
51
50
52
LNG
Refrigeration system
90

FIG. 3

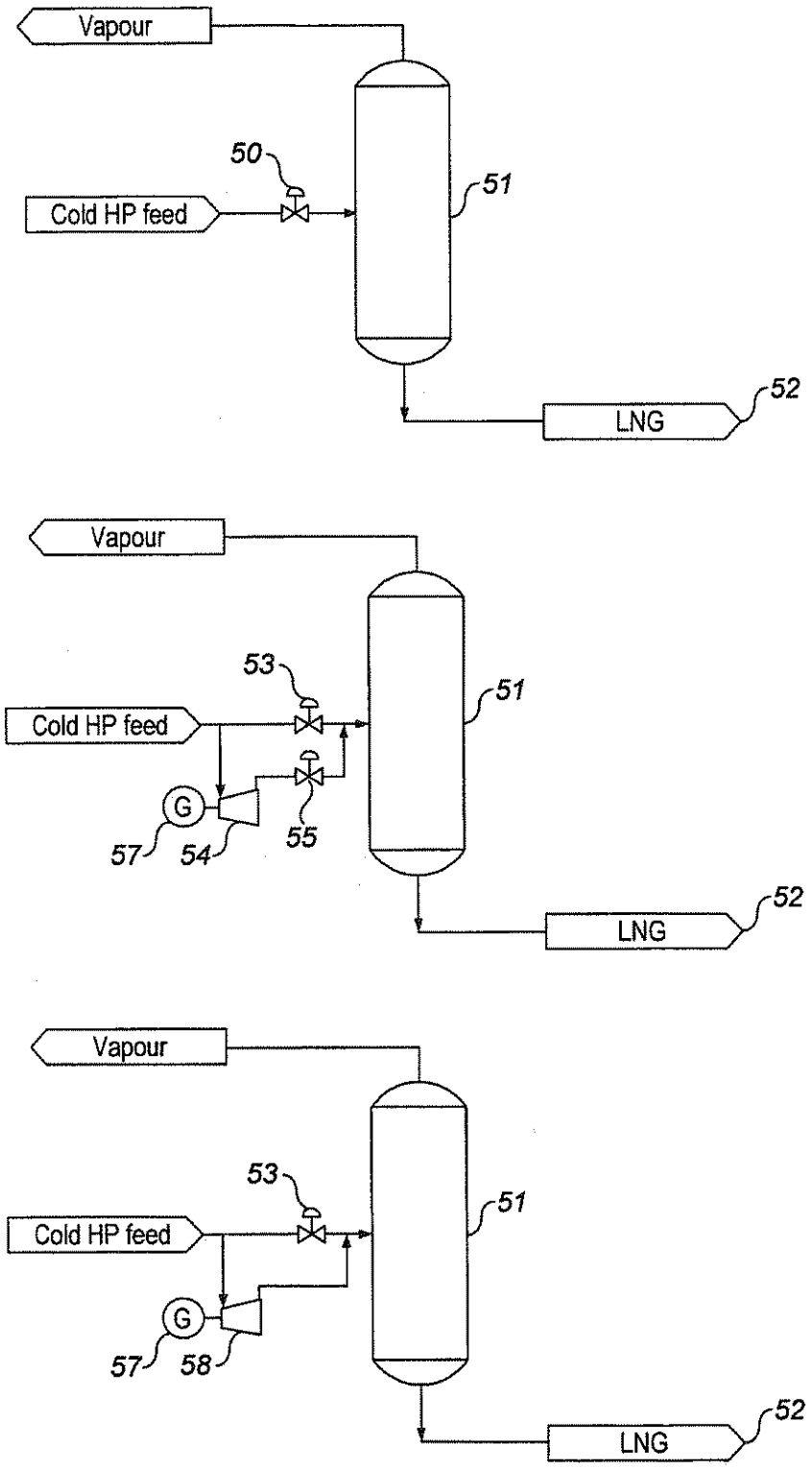
Vapour
50
Cold HP feed
51
52
LNG
Vapour
53
Cold HP feed
51
G
57
54
55
52
LNG
Vapour
53
Cold HP feed
51
G
57
58
52
LNG

FIG. 4