DRAWINGS

FIG. 1

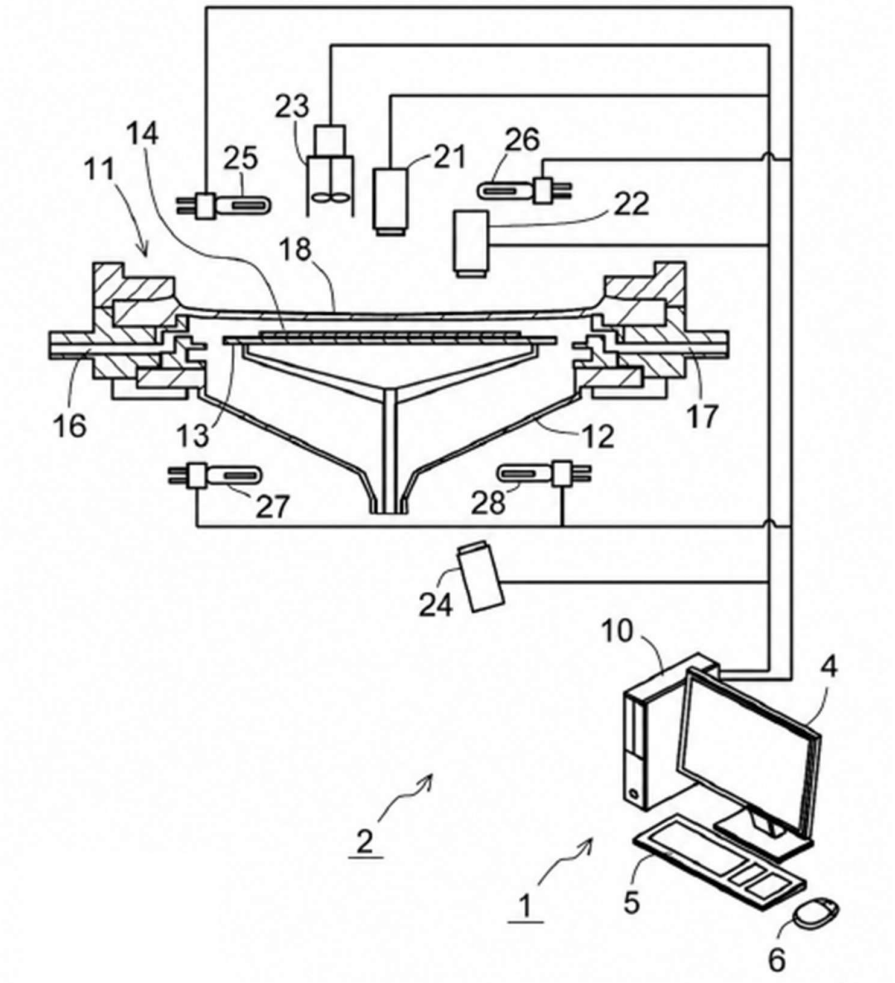

FIG. 2

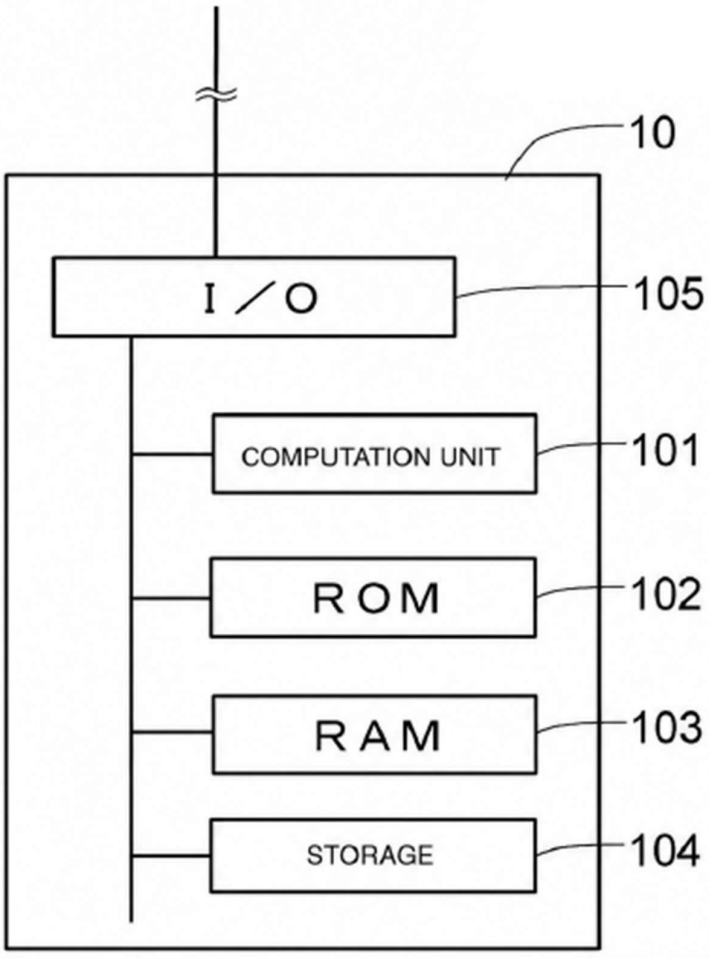

FIG. 3

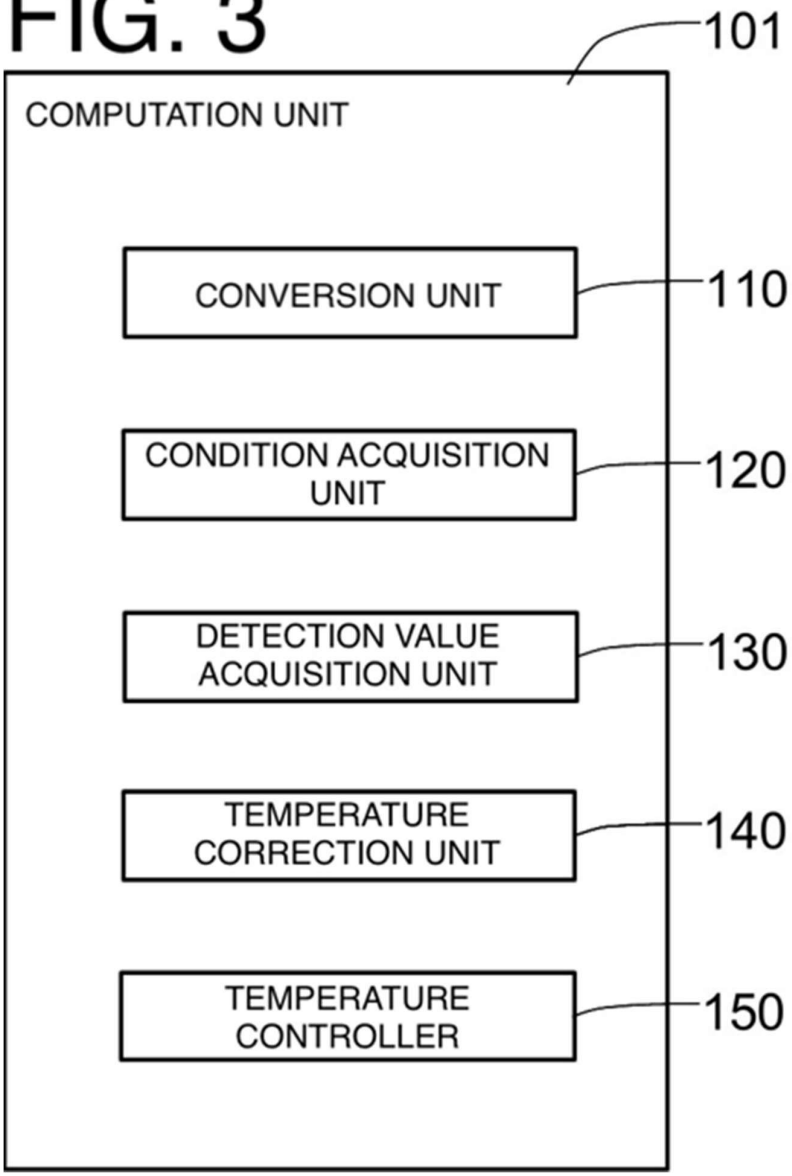
101
COMPUTATION UNIT
CONVERSION UNIT
110
CONDITION ACQUISITION UNIT
120
DETECTION VALUE ACQUISITION UNIT
130
TEMPERATURE CORRECTION UNIT
140
TEMPERATURE CONTROLLER
150

FIG. 4

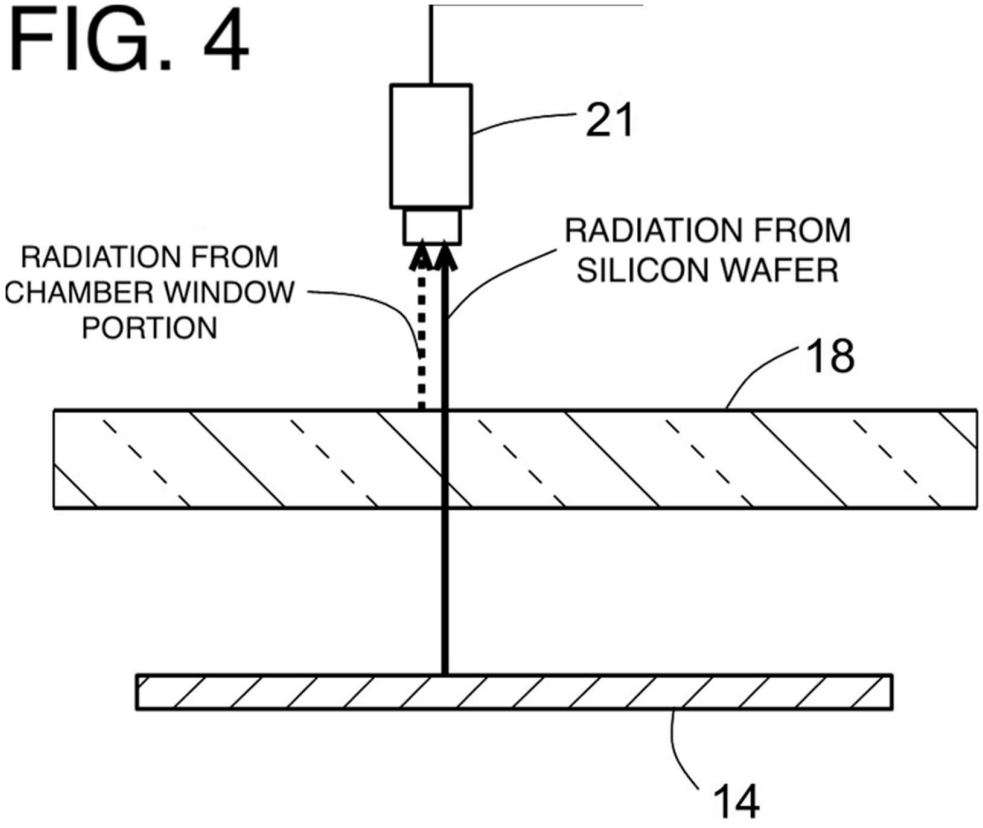
21
RADIATION FROM
SILICON WAFER
RADIATION FROM
CHAMBER WINDOW
PORTION
18
14

FIG. 5A

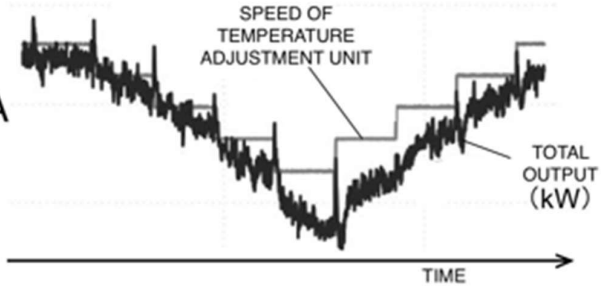

FIG. 5B

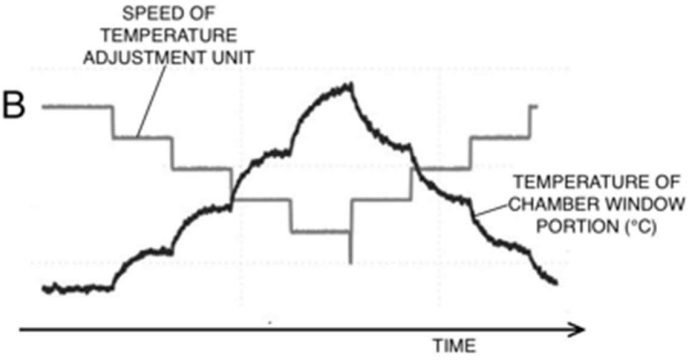

FIG. 5C

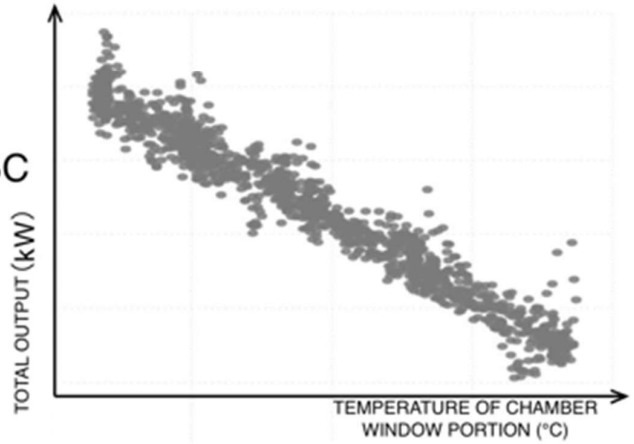

FIG. 6

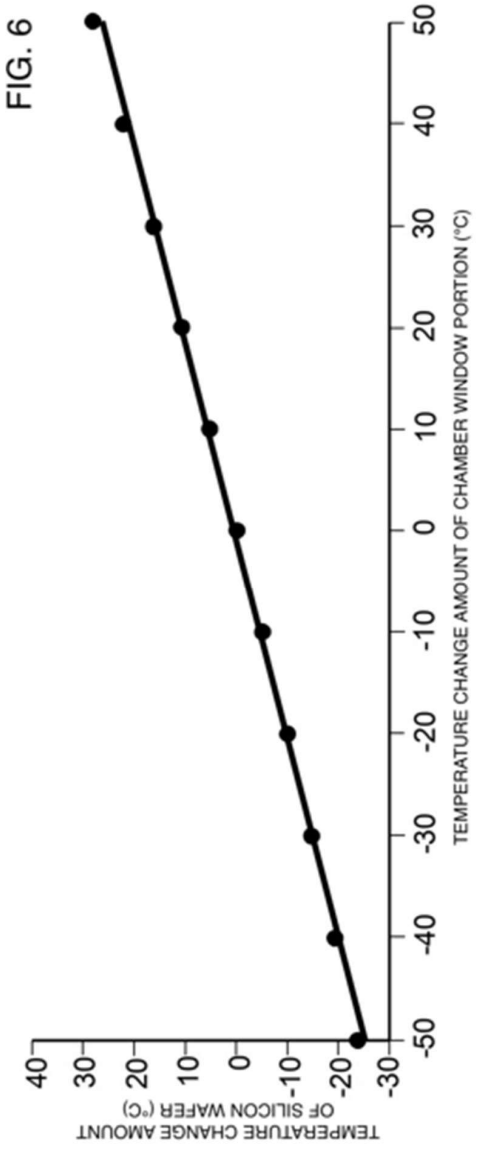
TEMPERATURE CHANGE AMOUNT OF SILICON WAFER (°C)
40
30
20
10
0
-10
-20
-30
-50
-40
-30
-20
-10
0
10
20
30
40
50
TEMPERATURE CHANGE AMOUNT OF CHAMBER WINDOW PORTION (°C)

FIG. 7

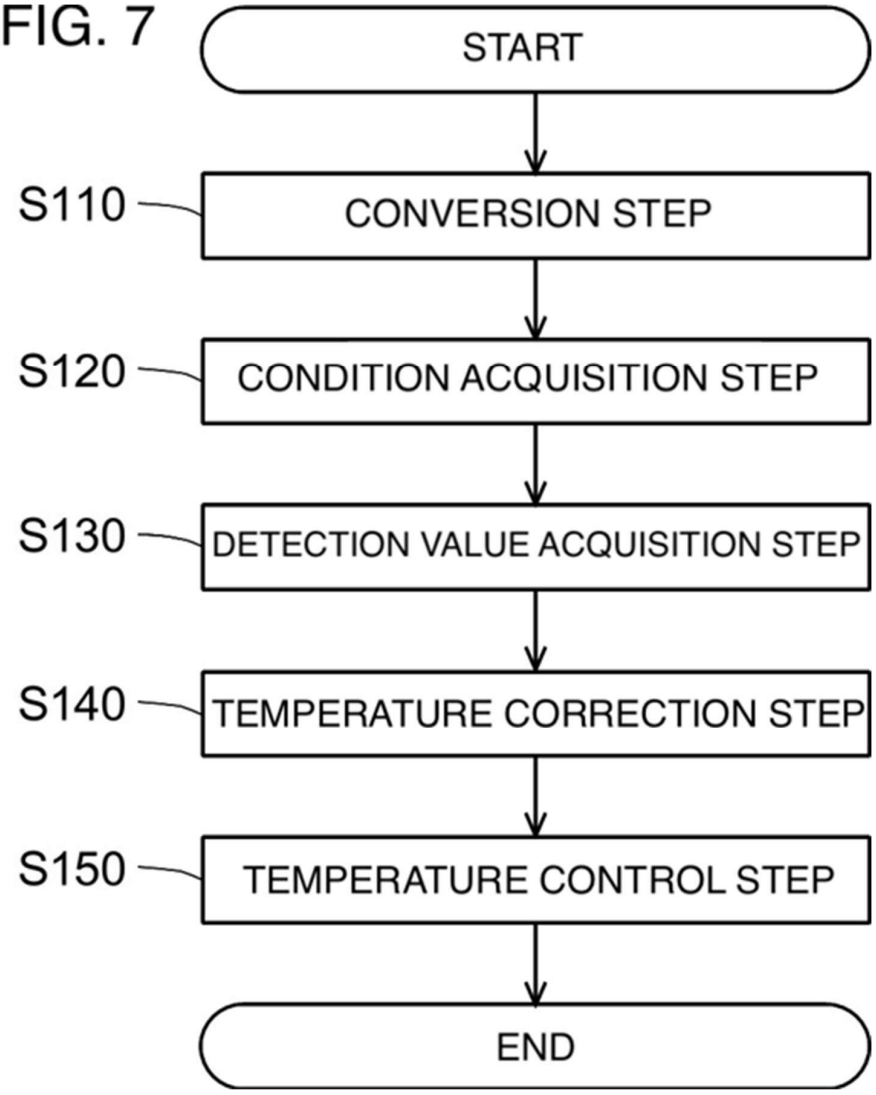
START
S110
CONVERSION STEP
S120
CONDITION ACQUISITION STEP
S130
DETECTION VALUE ACQUISITION STEP
S140
TEMPERATURE CORRECTION STEP
S150
TEMPERATURE CONTROL STEP
END

FIG. 8A

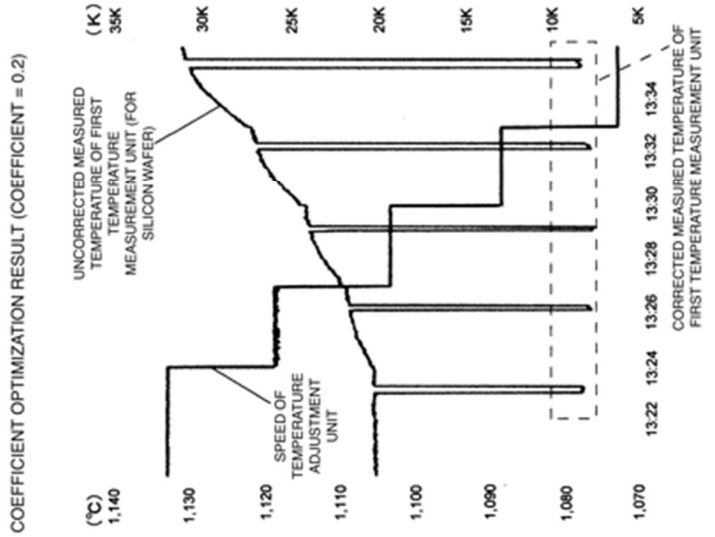
COEFFICIENT OPTIMIZATION RESULT (COEFFICIENT = 0.2)
(℃)
(K)
UNCORRECTED MEASURED TEMPERATURE OF FIRST TEMPERATURE MEASUREMENT UNIT (FOR SILICON WAFER)
SPEED OF TEMPERATURE ADJUSTMENT UNIT
CORRECTED MEASURED TEMPERATURE OF FIRST TEMPERATURE MEASUREMENT UNIT

FIG. 8B

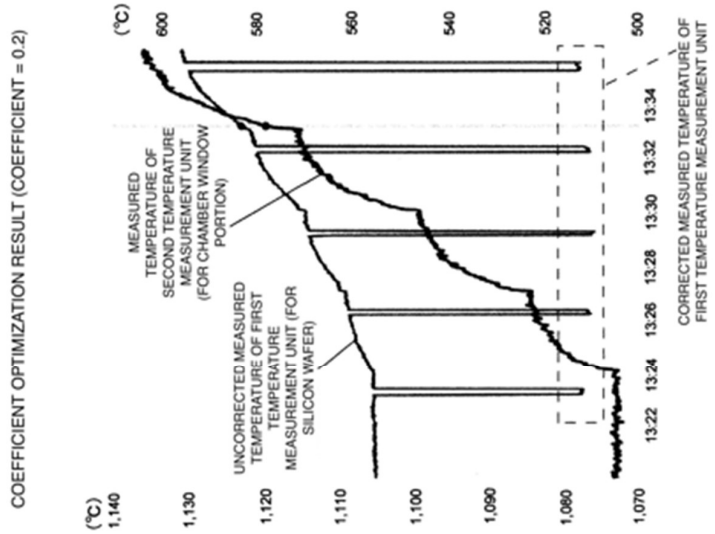
COEFFICIENT OPTIMIZATION RESULT (COEFFICIENT = 0.2)
(℃)
MEASURED TEMPERATURE OF SECOND TEMPERATURE MEASUREMENT UNIT (FOR CHAMBER WINDOW PORTION)
UNCORRECTED MEASURED TEMPERATURE OF FIRST TEMPERATURE MEASUREMENT UNIT (FOR SILICON WAFER)
CORRECTED MEASURED TEMPERATURE OF FIRST TEMPERATURE MEASUREMENT UNIT

FIG. 9A

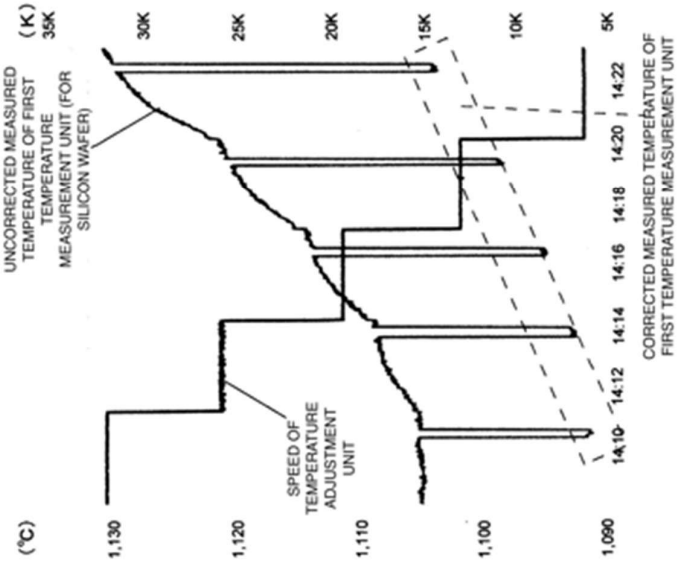
COEFFICIENT OPTIMIZATION RESULT (COEFFICIENT = 0.1)
(℃)
(K)
1,130
1,120
1,110
1,100
1,090
35K
30K
25K
20K
15K
10K
5K
14:10
14:12
14:14
14:16
14:18
14:20
14:22
UNCORRECTED MEASURED TEMPERATURE OF FIRST TEMPERATURE MEASUREMENT UNIT (FOR SILICON WAFER)
SPEED OF TEMPERATURE ADJUSTMENT UNIT
CORRECTED MEASURED TEMPERATURE OF FIRST TEMPERATURE MEASUREMENT UNIT

FIG. 9B

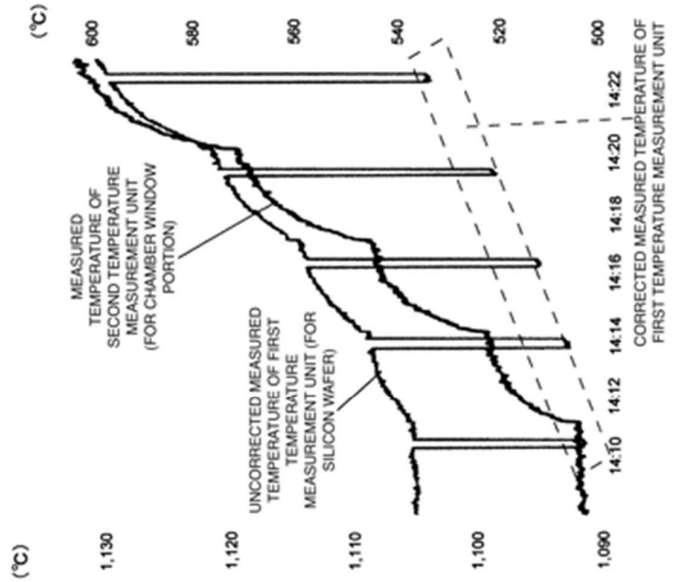
COEFFICIENT OPTIMIZATION RESULT (COEFFICIENT = 0.1)
(℃)
(℃)
1,130
1,120
1,110
1,100
1,090
600
580
560
540
520
500
14:10
14:12
14:14
14:16
14:18
14:20
14:22
MEASURED TEMPERATURE OF SECOND TEMPERATURE MEASUREMENT UNIT (FOR CHAMBER WINDOW PORTION)
UNCORRECTED MEASURED TEMPERATURE OF FIRST TEMPERATURE MEASUREMENT UNIT (FOR SILICON WAFER)
CORRECTED MEASURED TEMPERATURE OF FIRST TEMPERATURE MEASUREMENT UNIT

FIG. 10

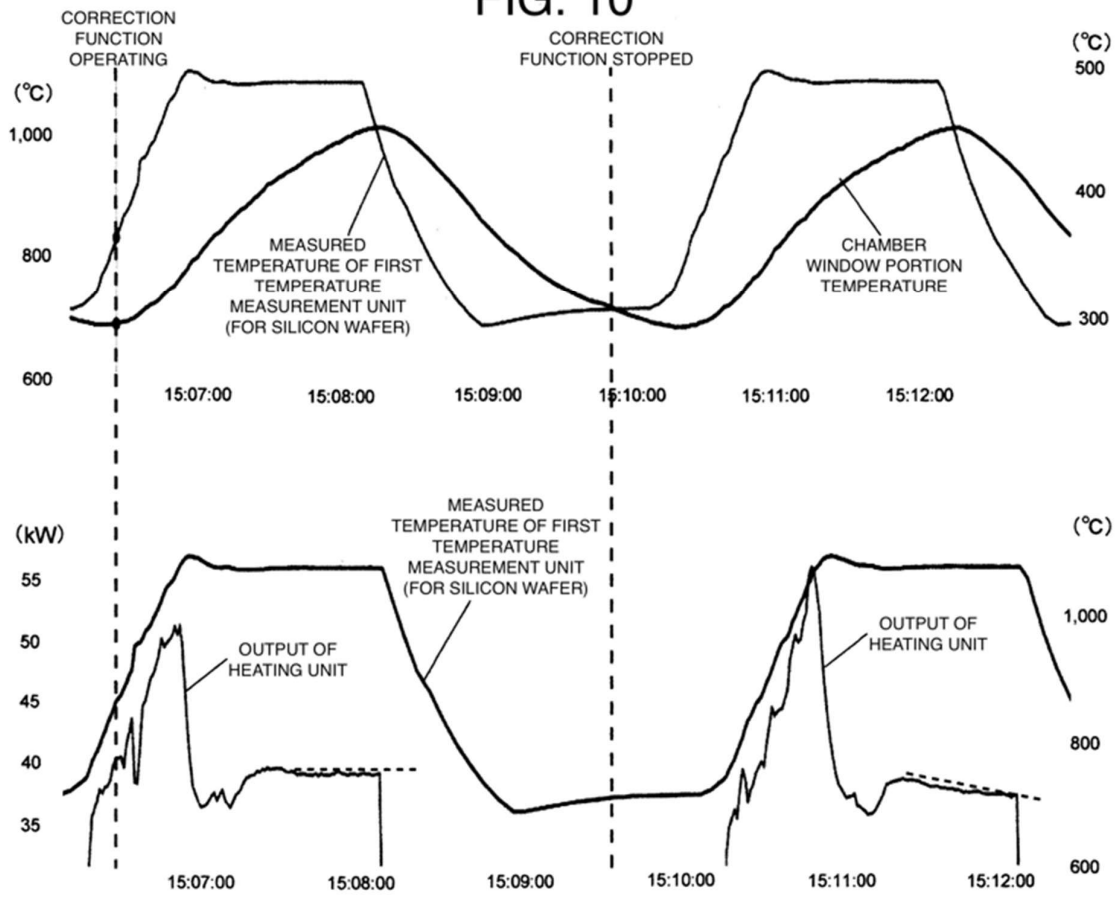
CORRECTION FUNCTION OPERATING
CORRECTION FUNCTION STOPPED
(°C)
1,000
800
600
500
400
300
MEASURED TEMPERATURE OF FIRST TEMPERATURE MEASUREMENT UNIT (FOR SILICON WAFER)
CHAMBER WINDOW PORTION TEMPERATURE
15:07:00
15:08:00
15:09:00
15:10:00
15:11:00
15:12:00
(kW)
55
50
45
40
35
OUTPUT OF HEATING UNIT
MEASURED TEMPERATURE OF FIRST TEMPERATURE MEASUREMENT UNIT (FOR SILICON WAFER)
OUTPUT OF HEATING UNIT
(°C)
1,000
800
600