FIG.1

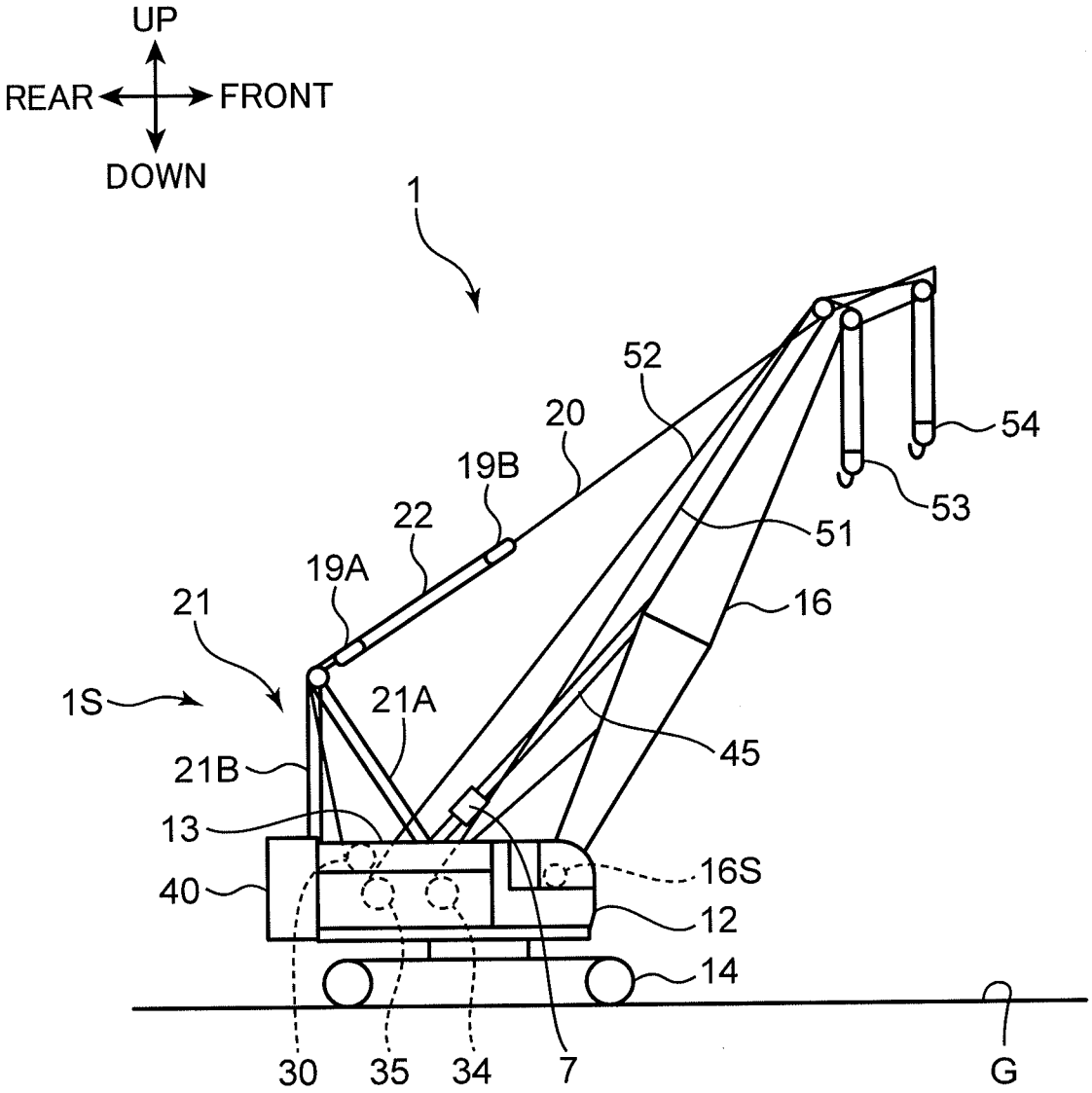
UP
REAR
FRONT
DOWN
1
52
20
19B
22
19A
21
1S
21A
21B
13
40
45
16
51
53
54
16S
12
14
30
35
34
7
G

FIG.2

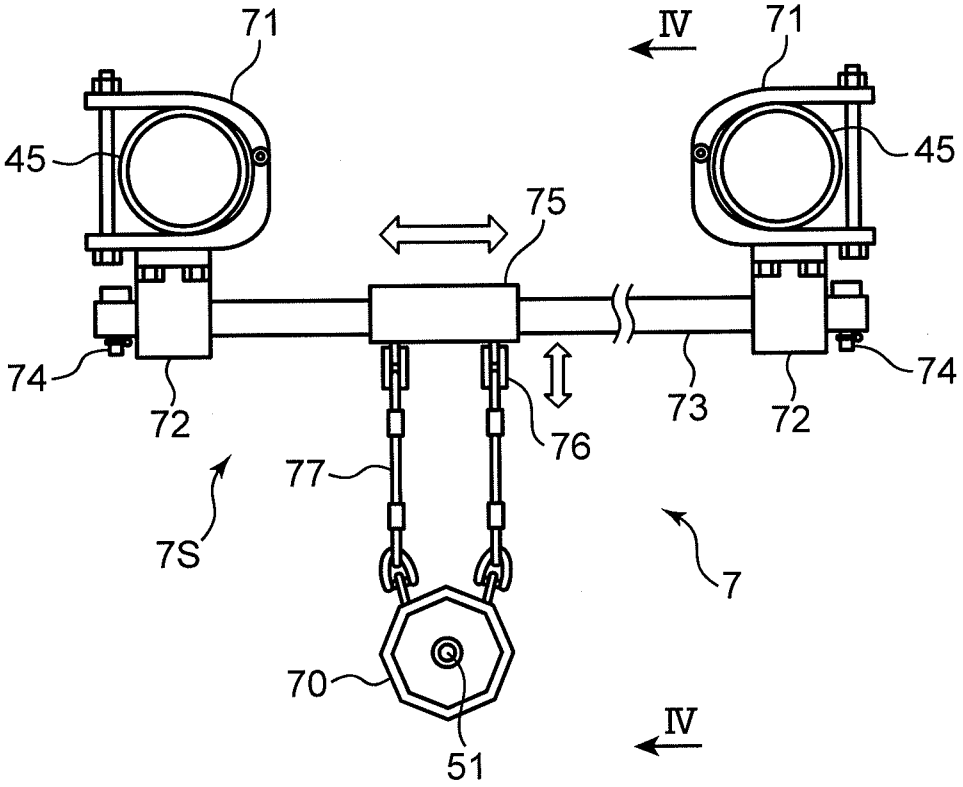
71
IV
71
45
45
75
74
72
73
72
74
76
77
7S
7
70
51
IV

FIG.3

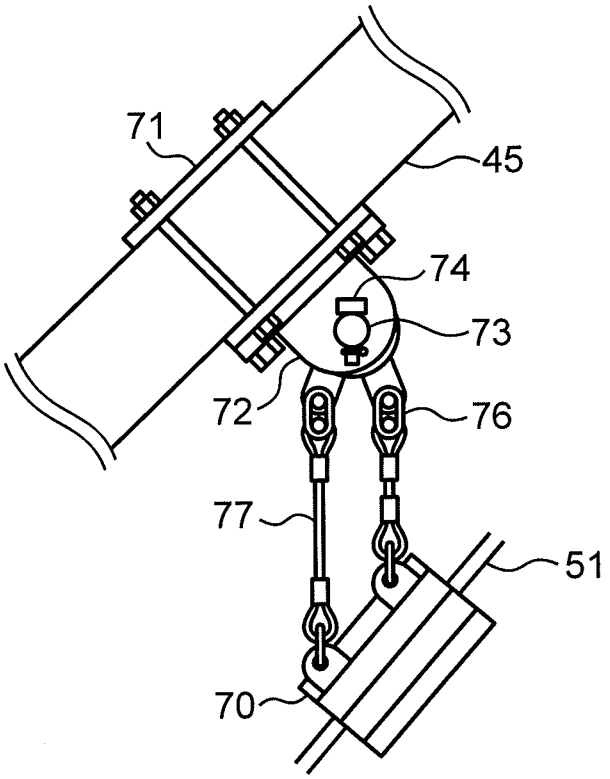
71
45
74
73
72
76
77
51
70

FIG.4

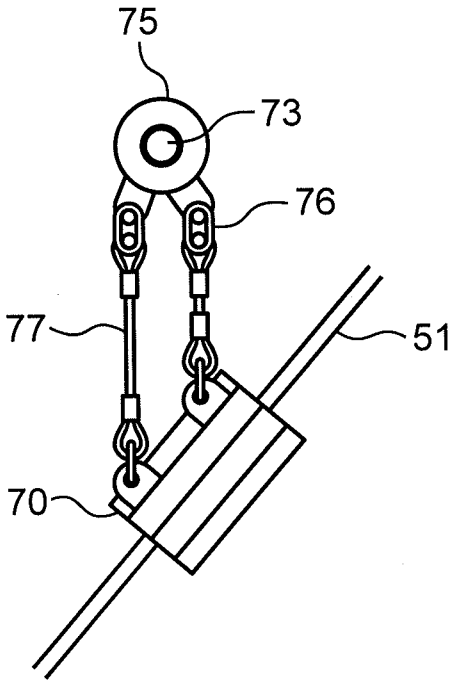

FIG.5

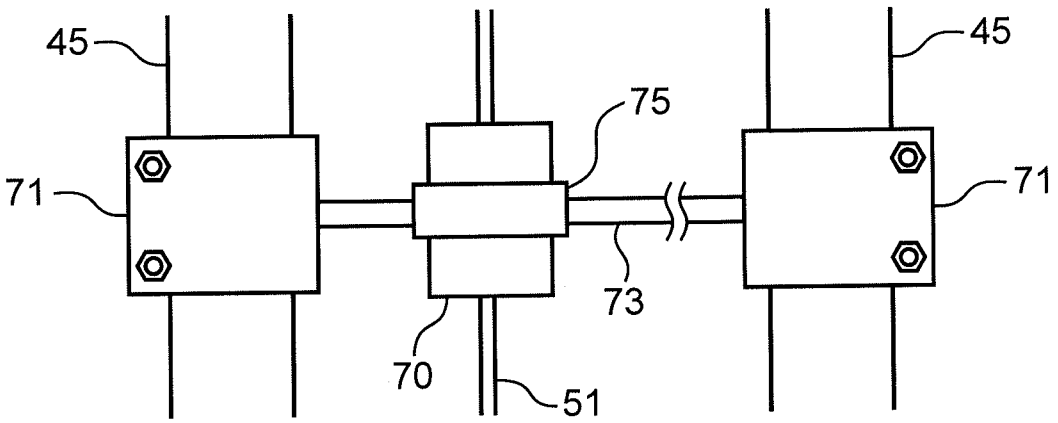

FIG.6

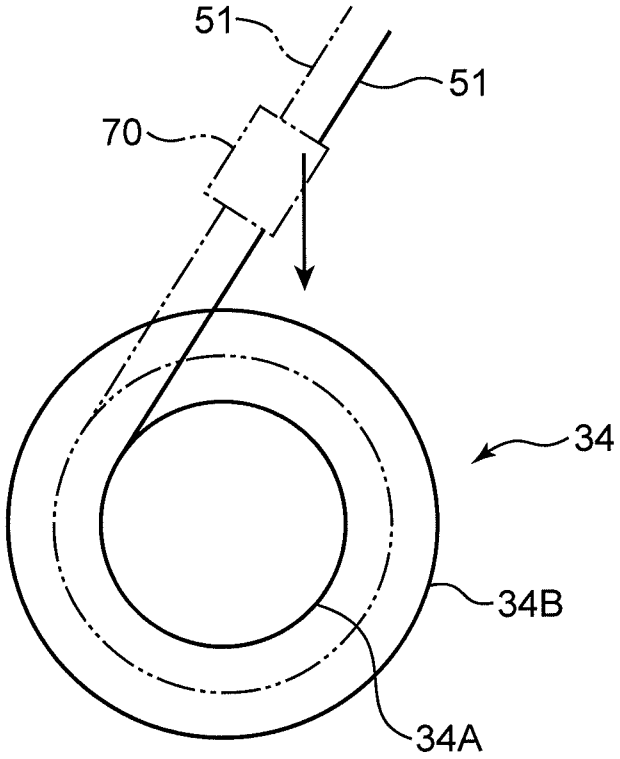

FIG.7

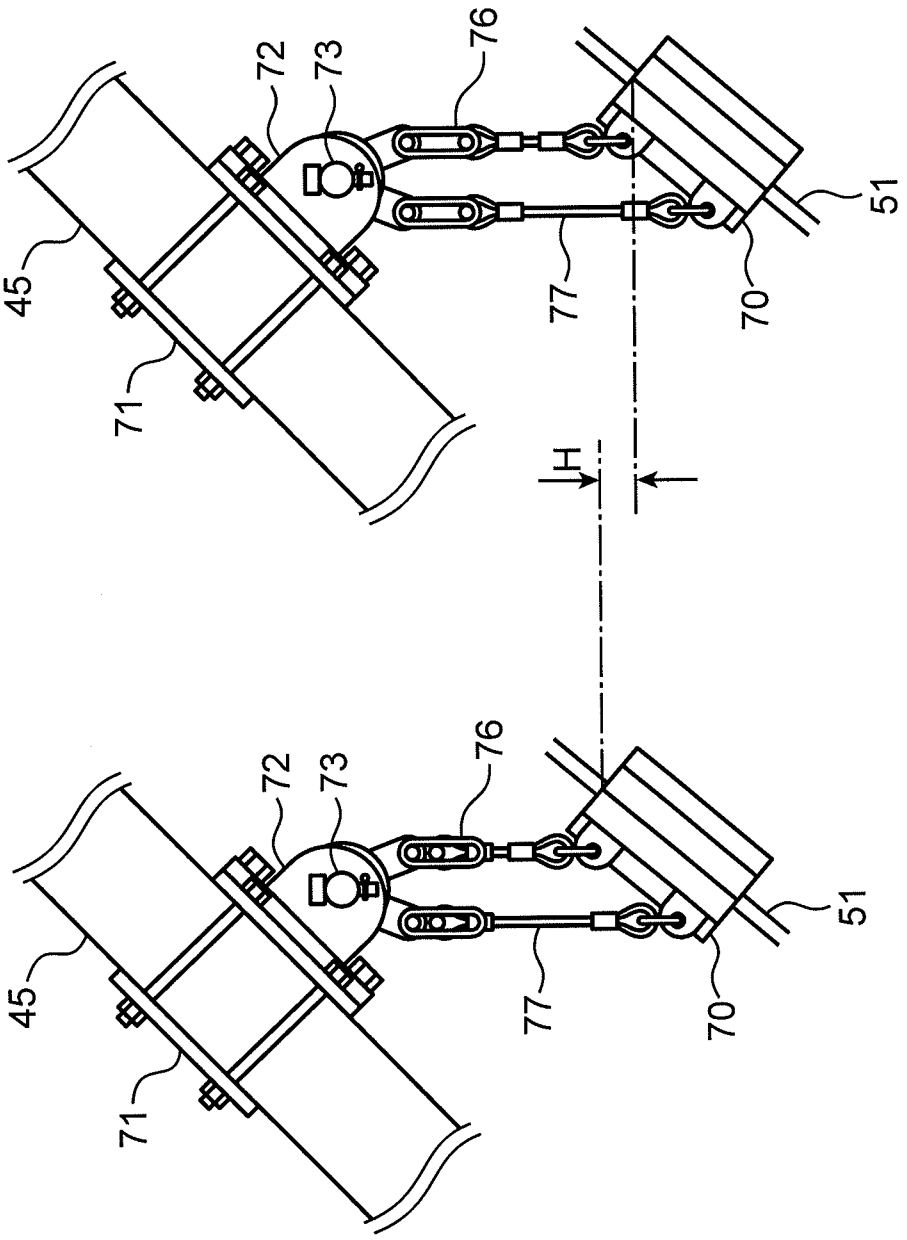

FIG.8

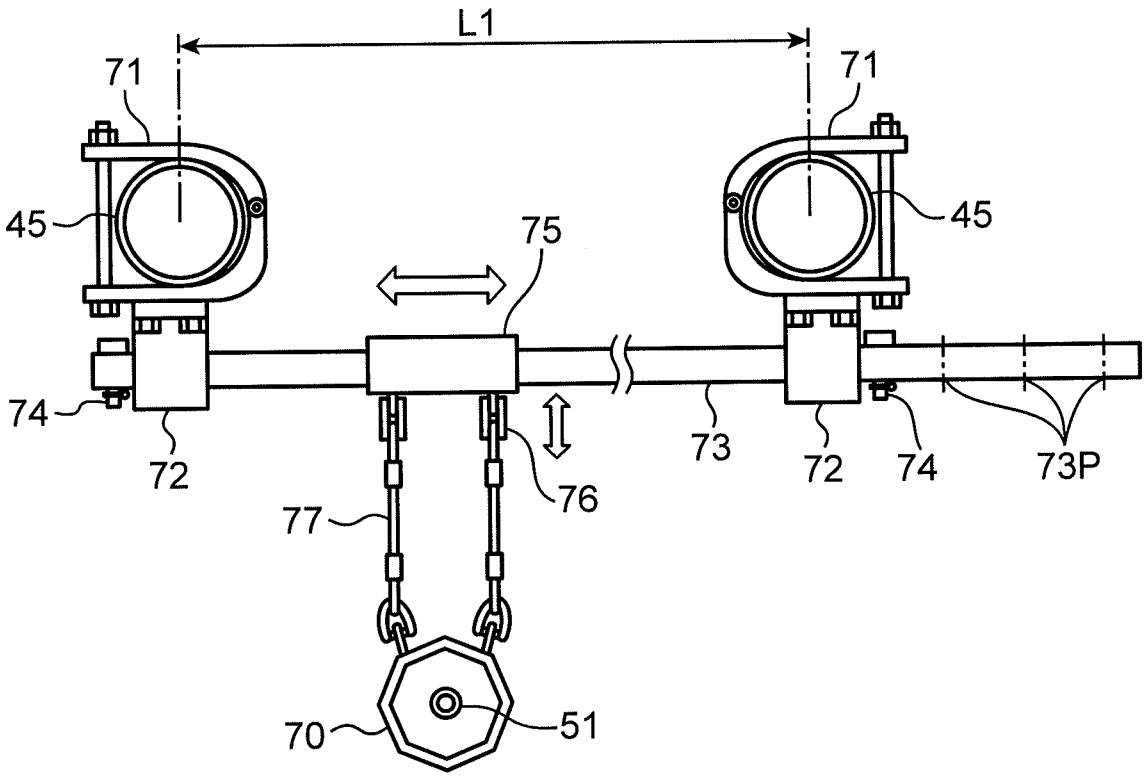
L1
71
71
45
45
75
74
72
73
72
74
73P
76
77
70
51

FIG.9

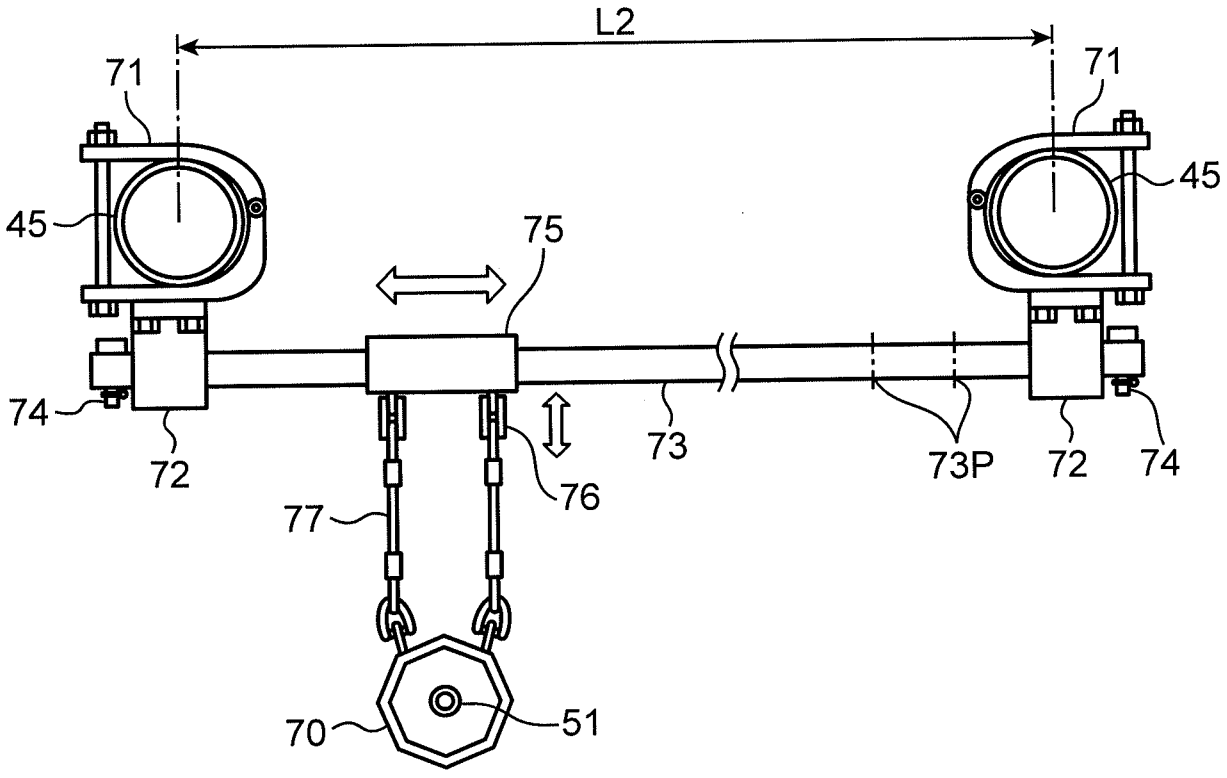
L2
71
71
45
45
75
74
72
73
73P
72
74
76
77
70
51

FIG.10

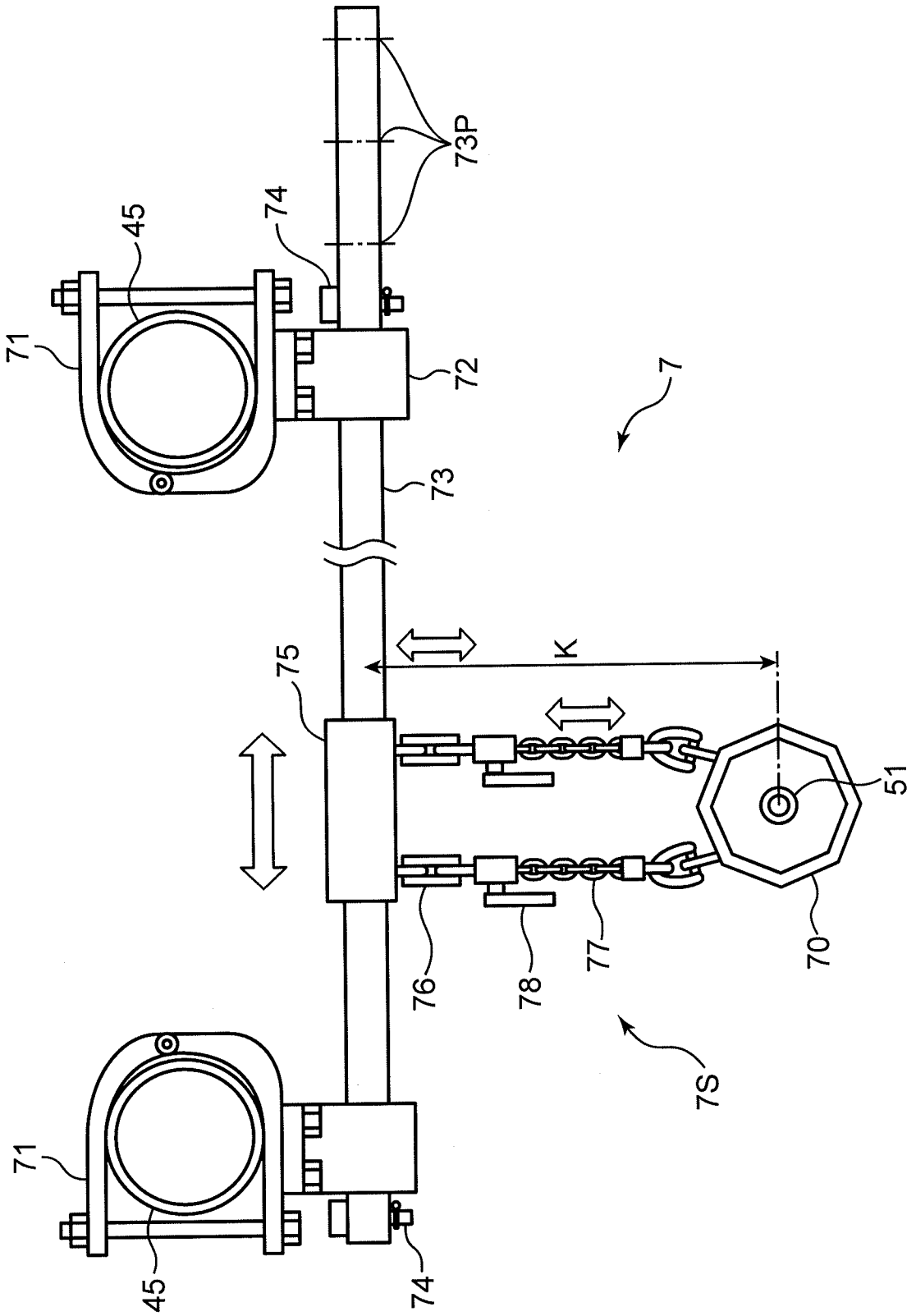

FIG.11

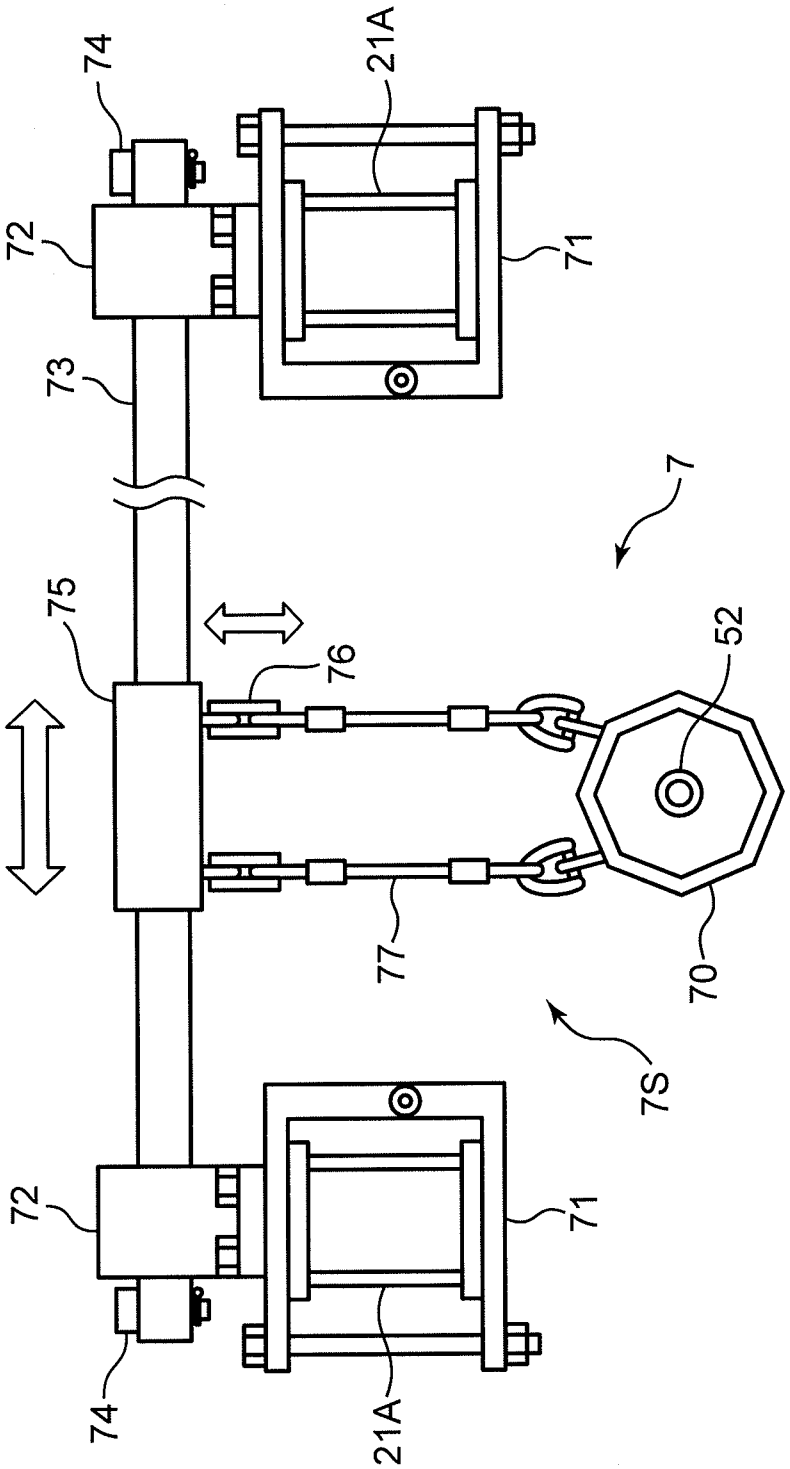

FIG.12

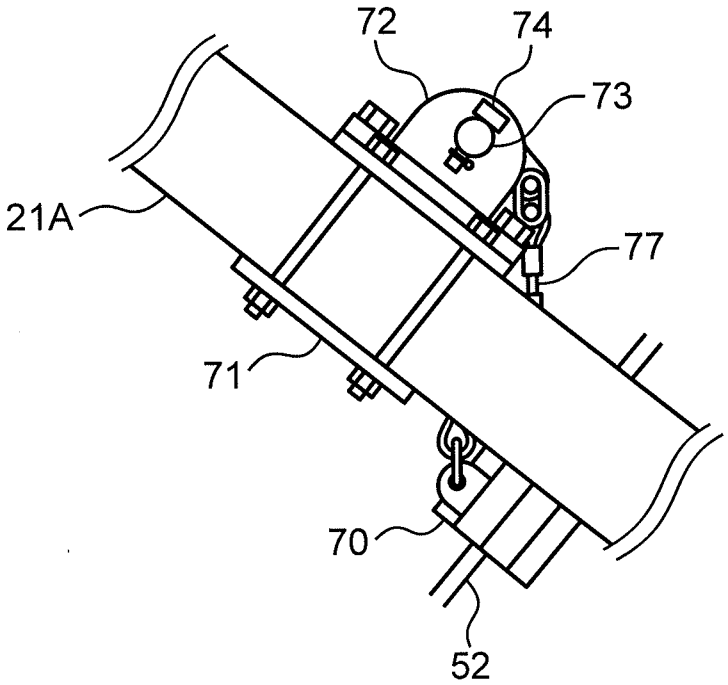

FIG.13

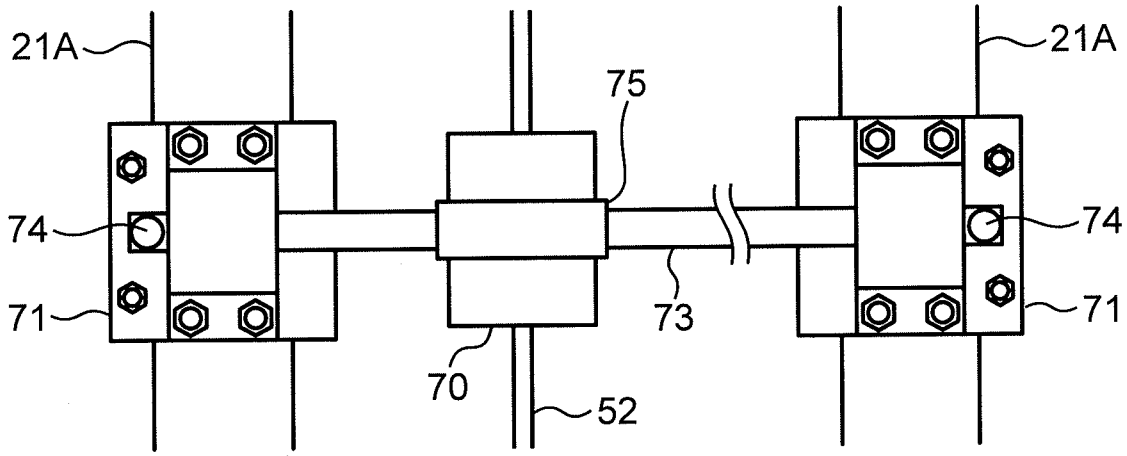

FIG.14

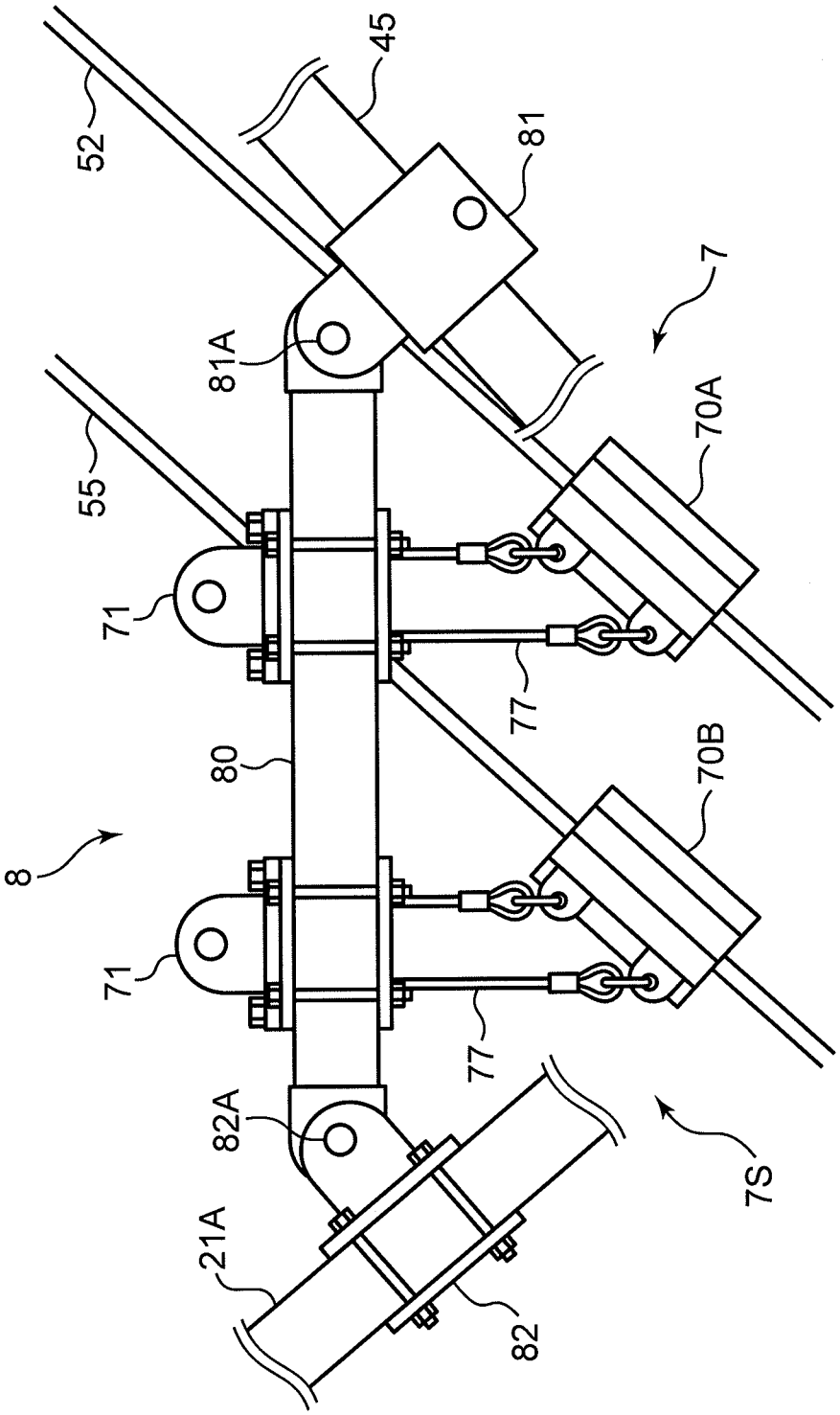

FIG.15

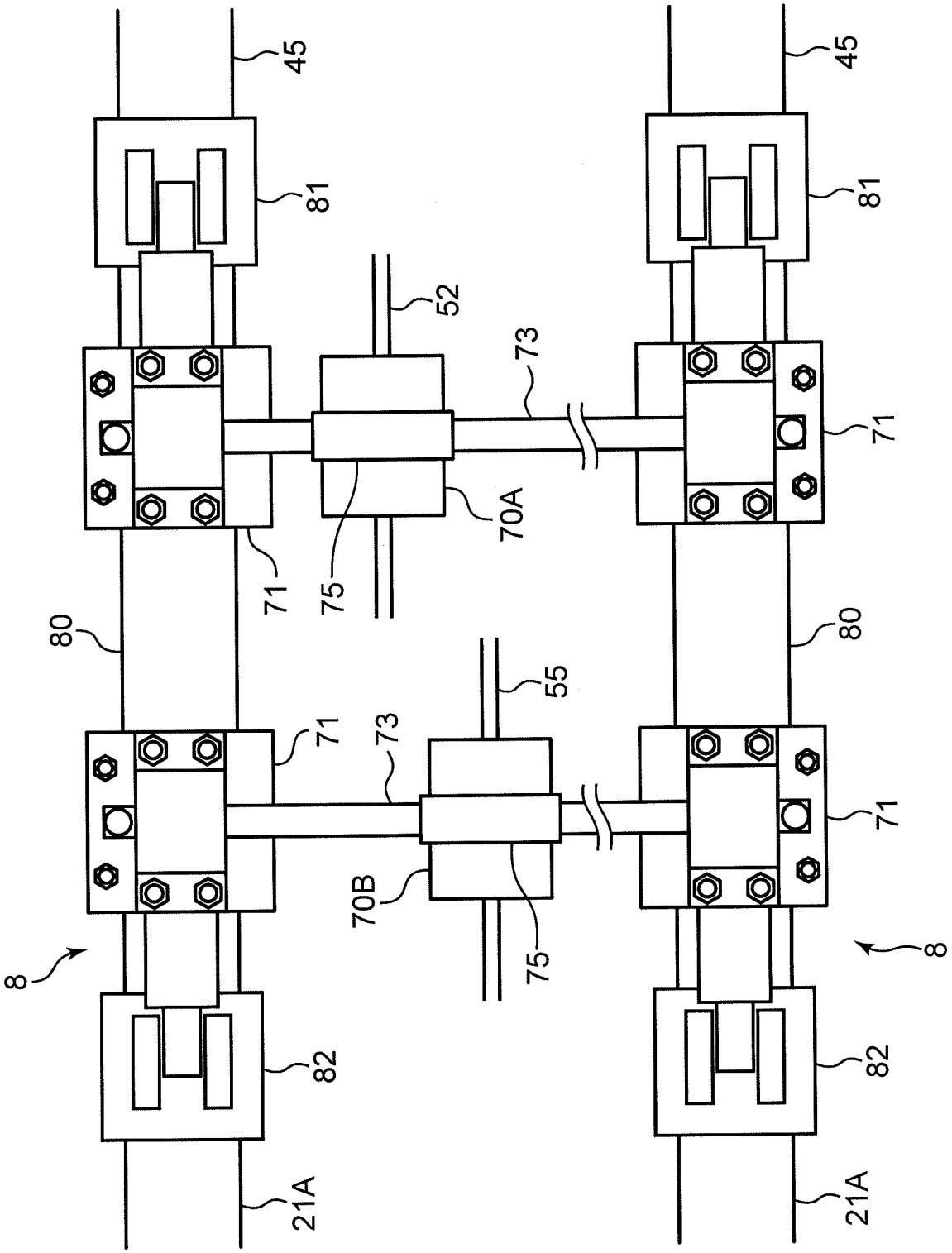

FIG.16

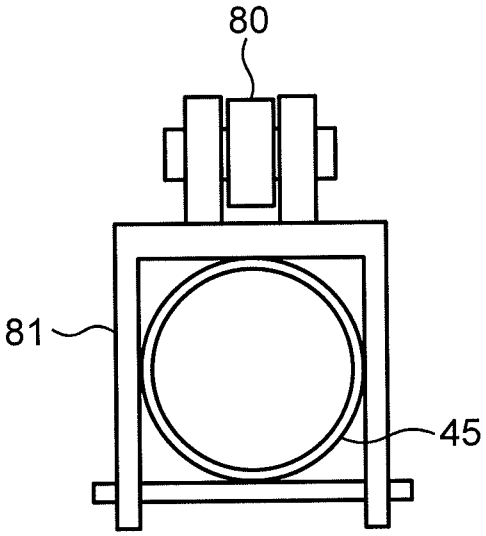

FIG.17

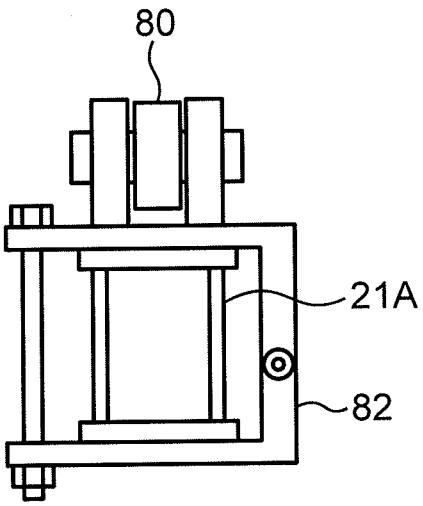

FIG.18

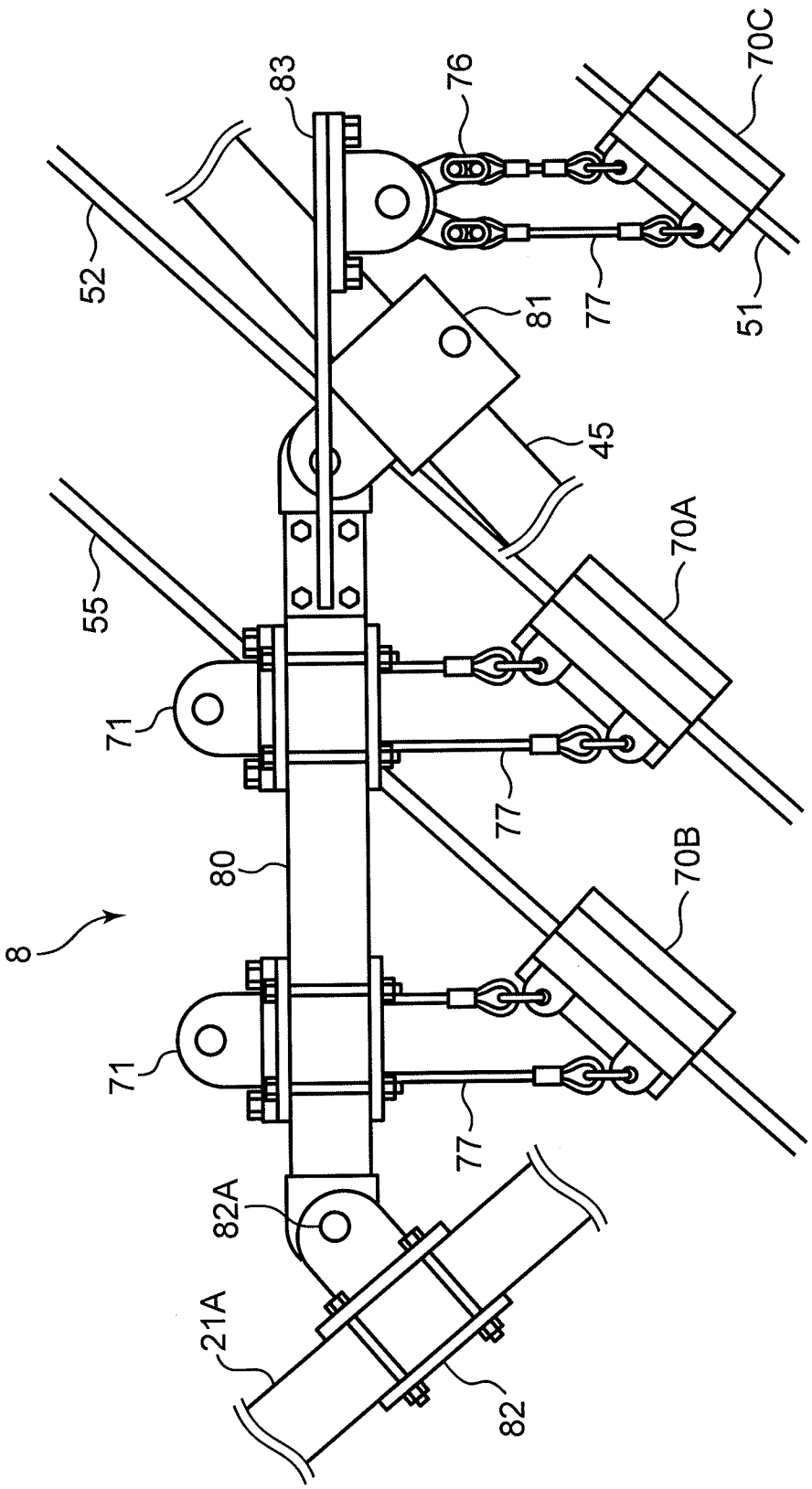

FIG.19

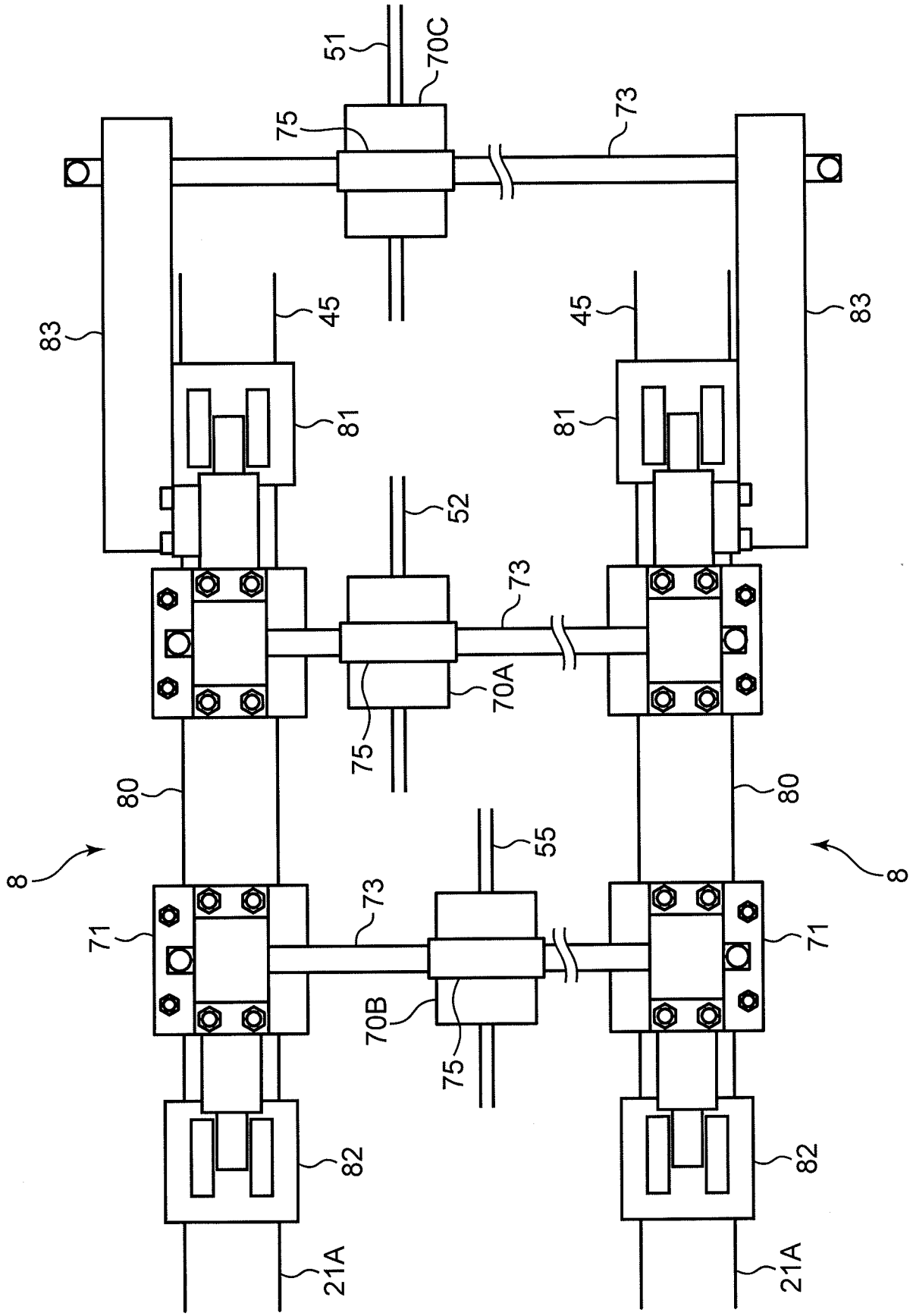
51
70C
75
73
83
45
45
83
81
81
52
73
70A
75
80
80
8
8
55
73
71
71
70B
75
82
82
21A
21A

FIG.20

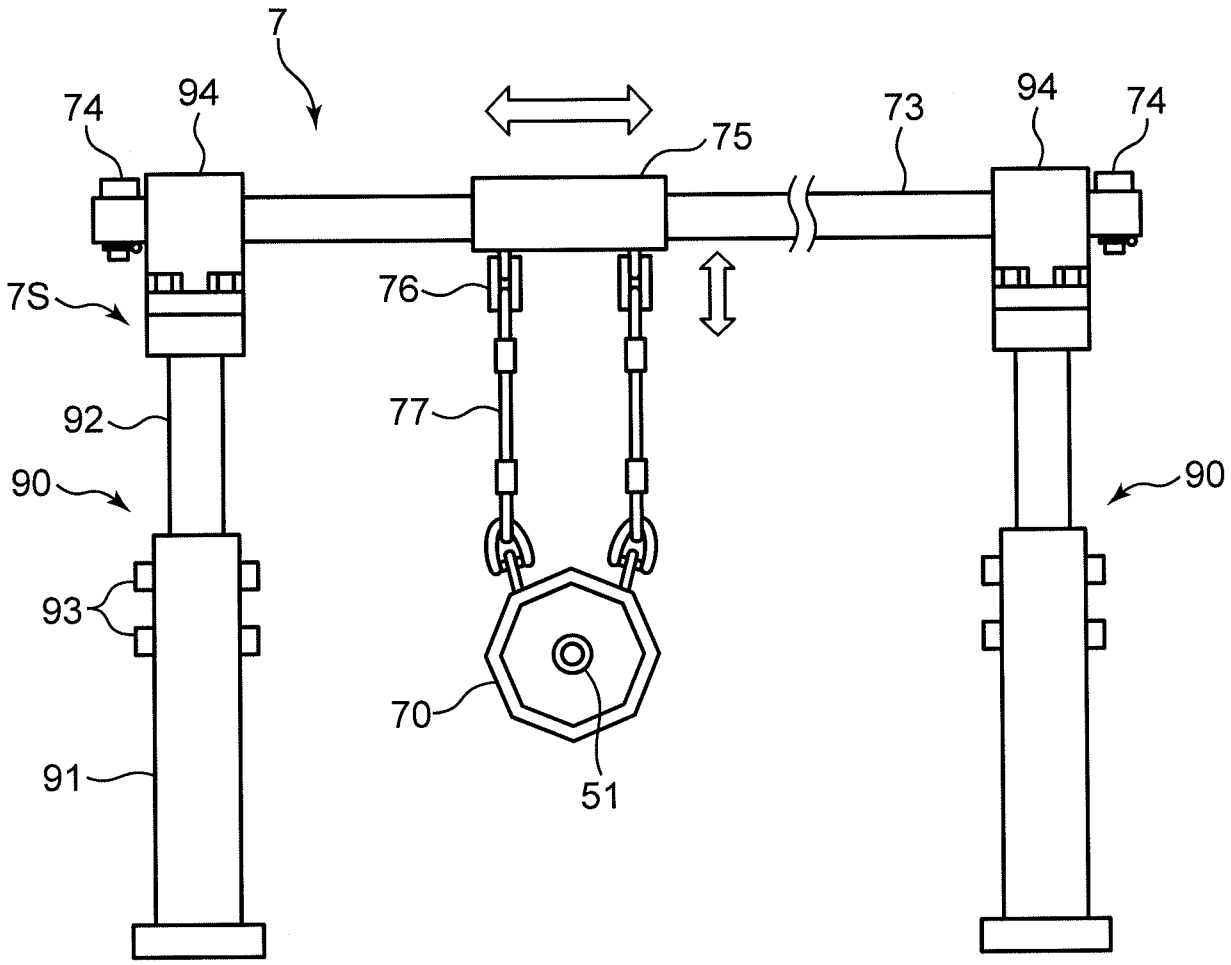

FIG.21

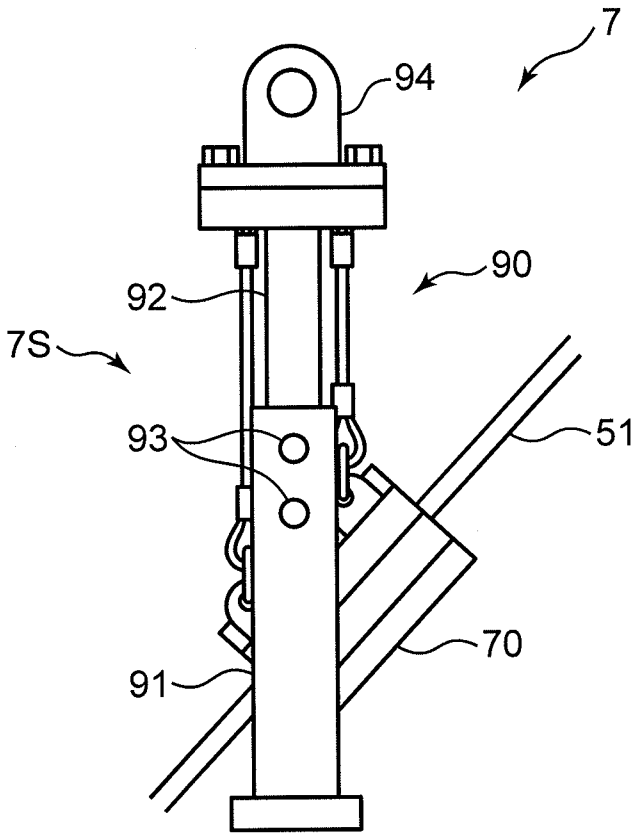

FIG.22

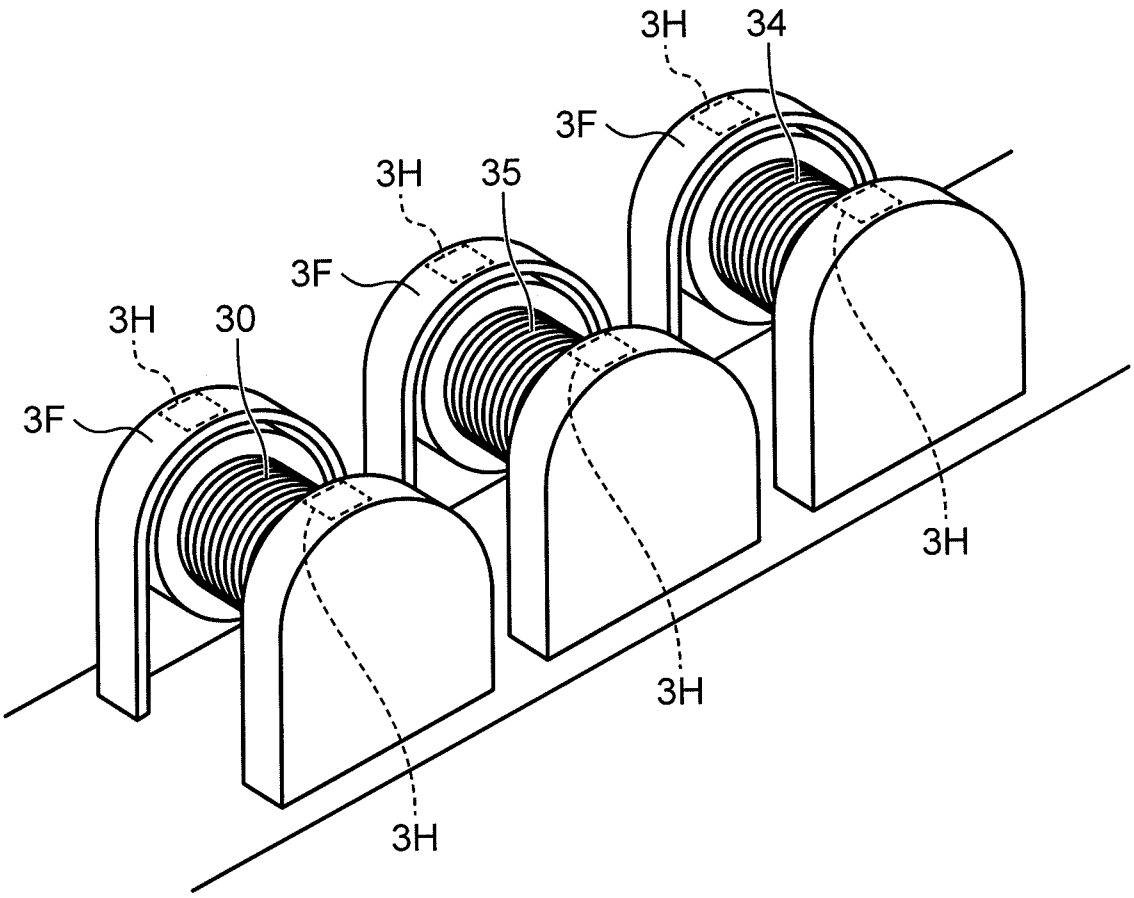

FIG.23

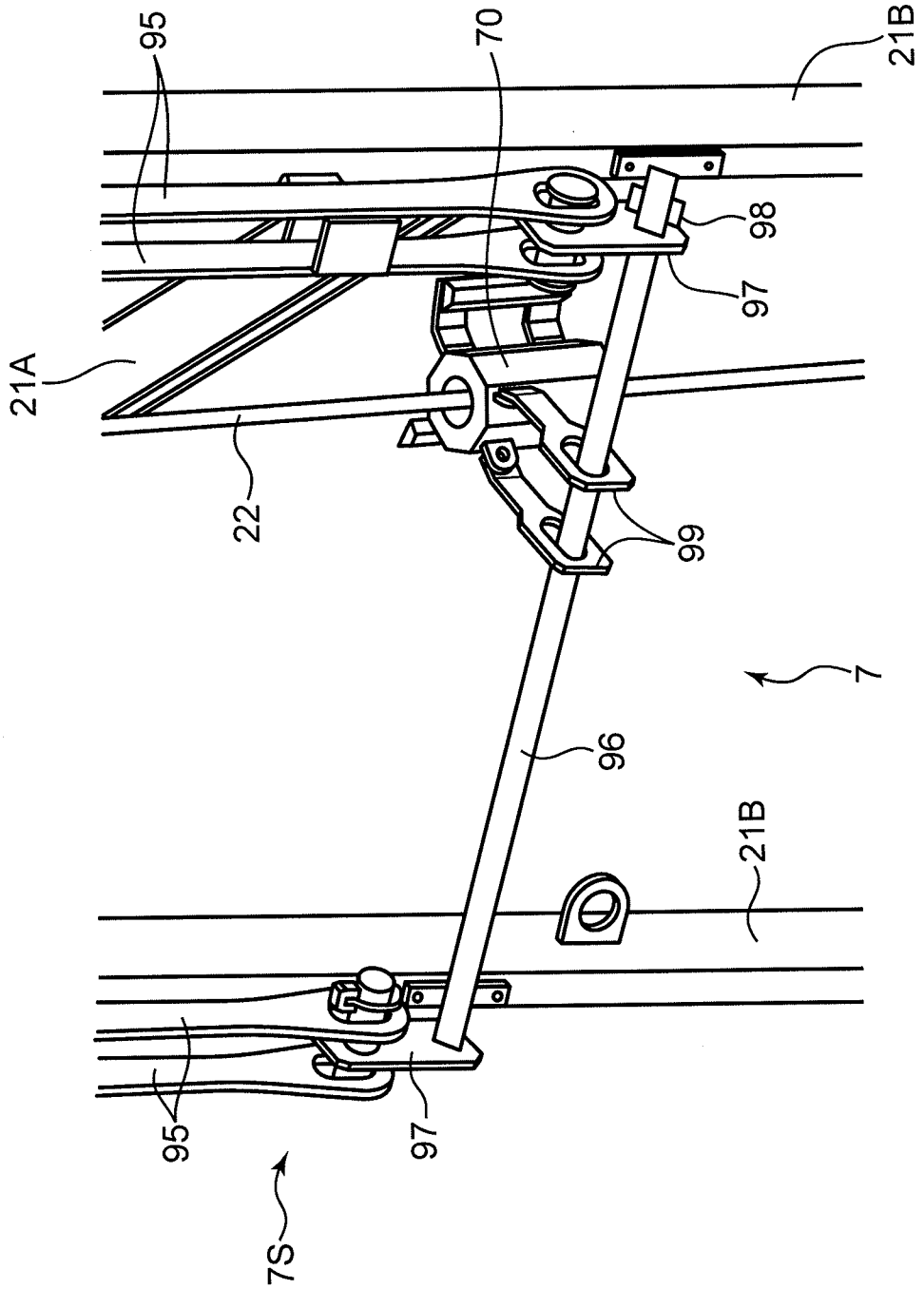

FIG.24

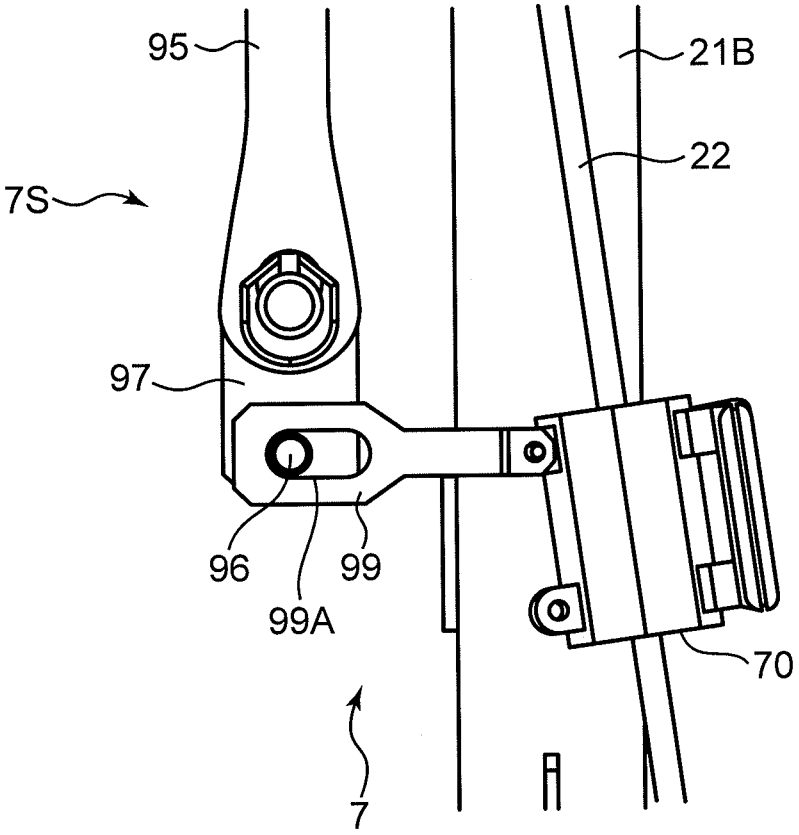

FIG.25

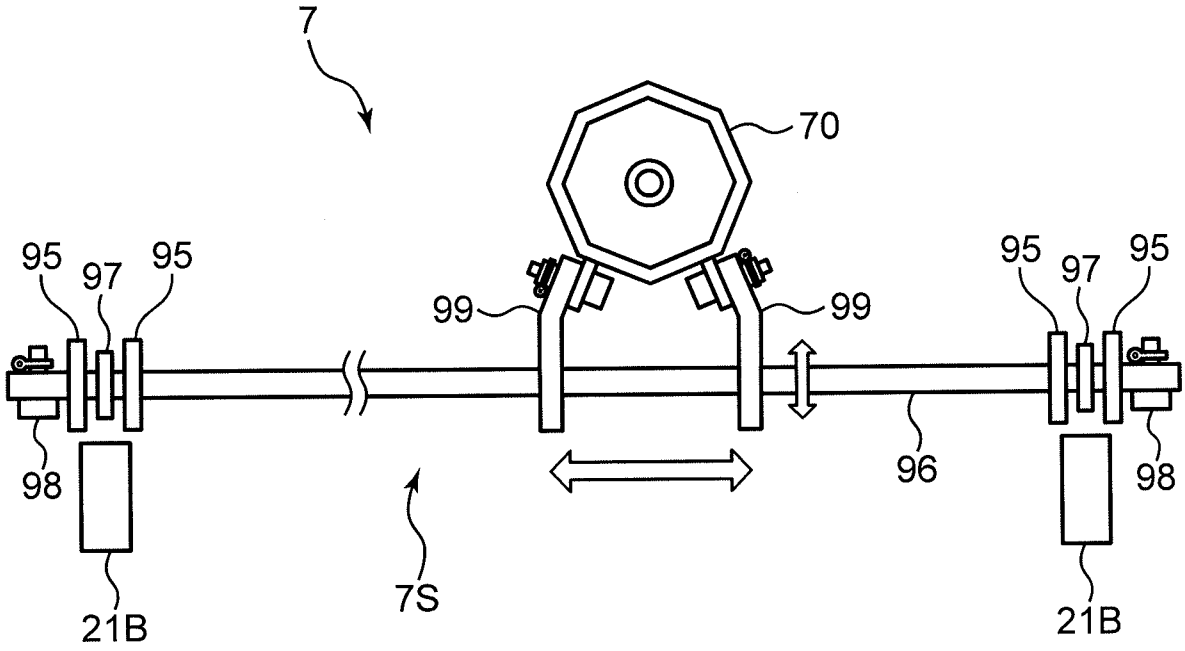

FIG.26

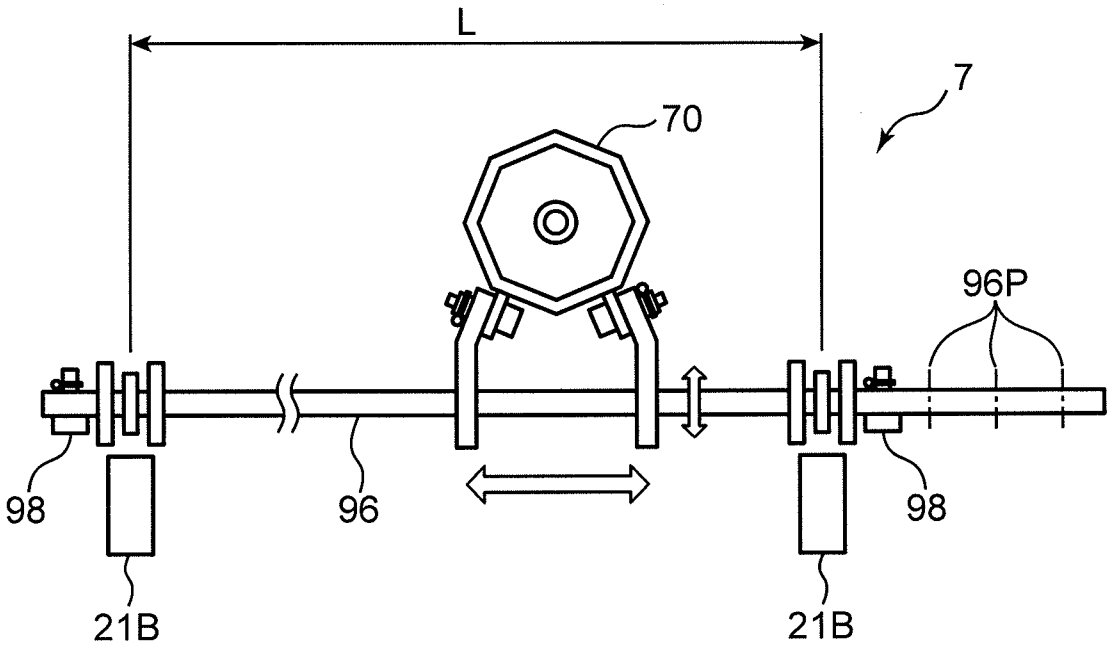

FIG.27

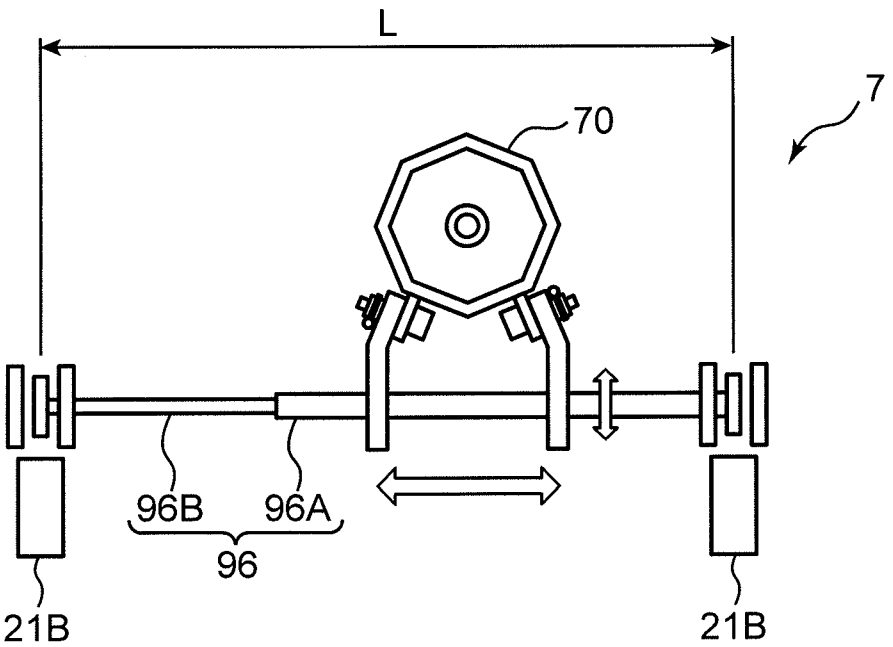

FIG.28

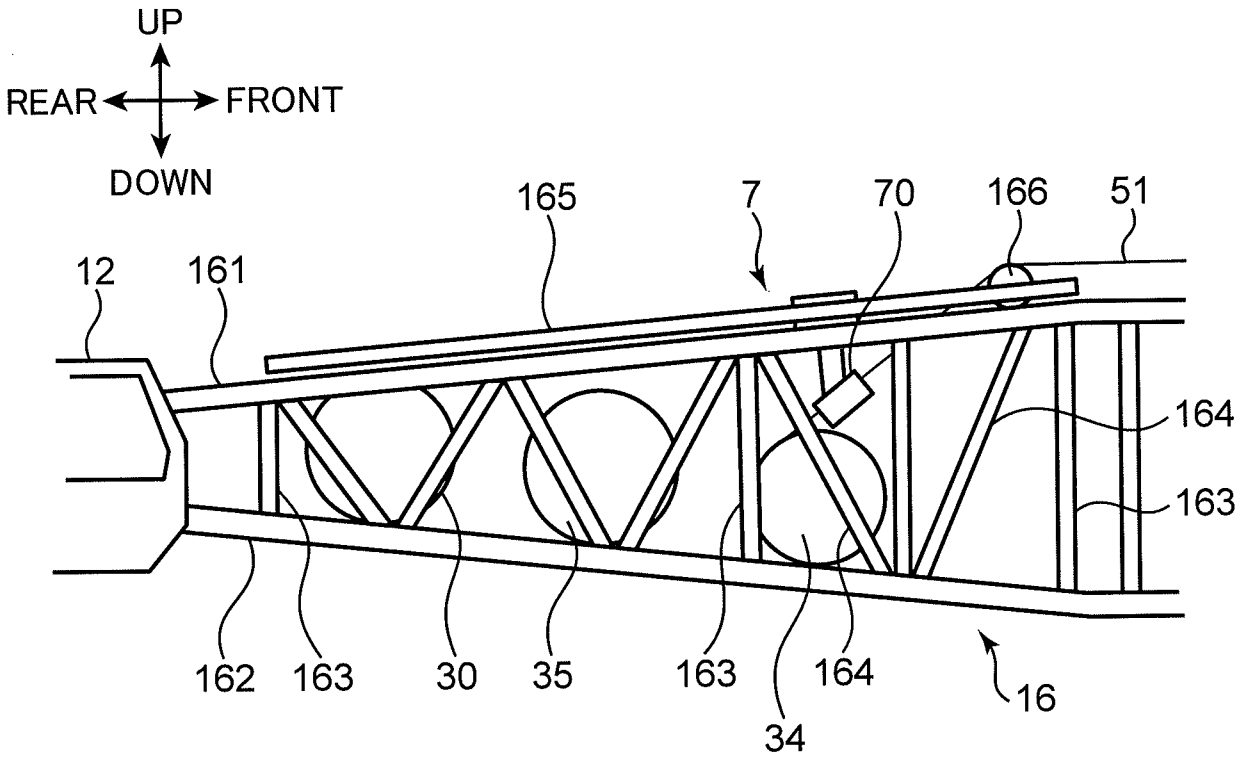
UP
REAR
FRONT
DOWN
165
7
70
166
51
12
161
164
163
162
163
30
35
163
164
16
34

FIG.29

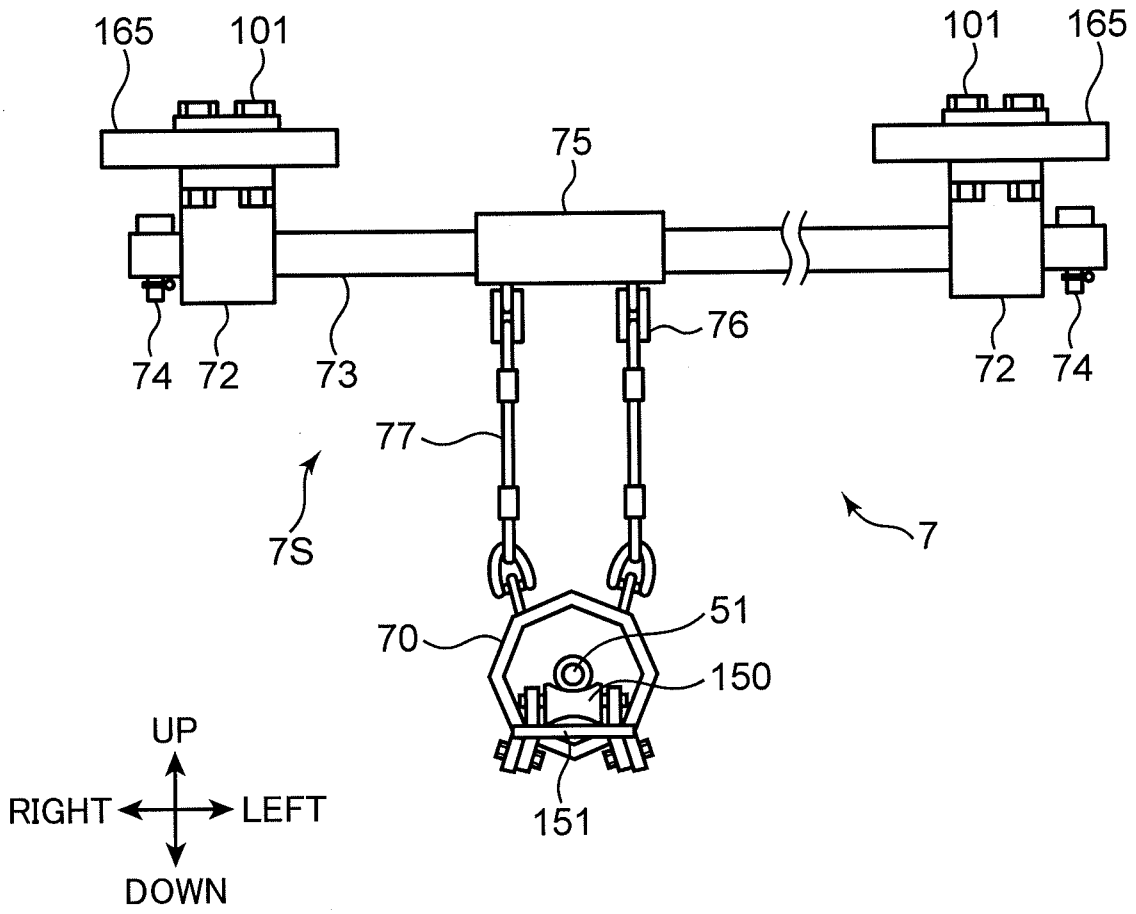
165
101
101
165
75
74
72
73
76
72
74
77
7S
7
70
51
150
151
UP
RIGHT
LEFT
DOWN

FIG.30

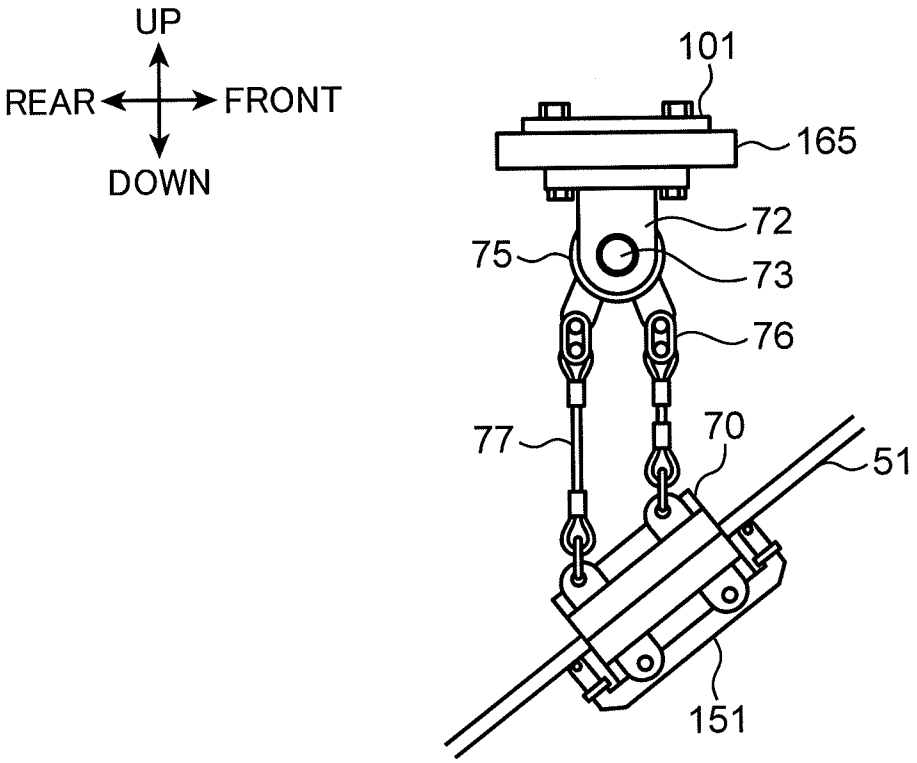

FIG.31

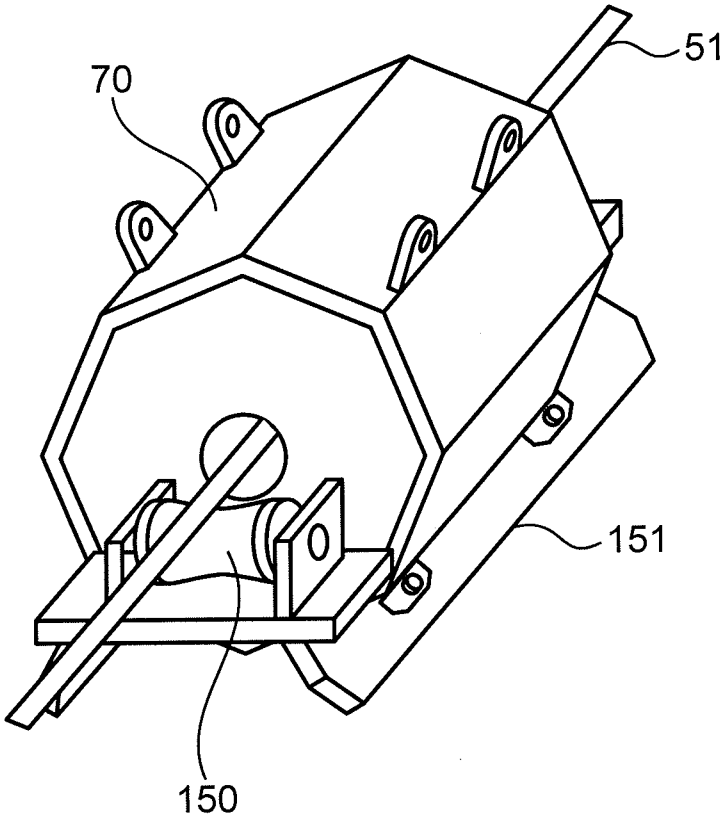

FIG.32

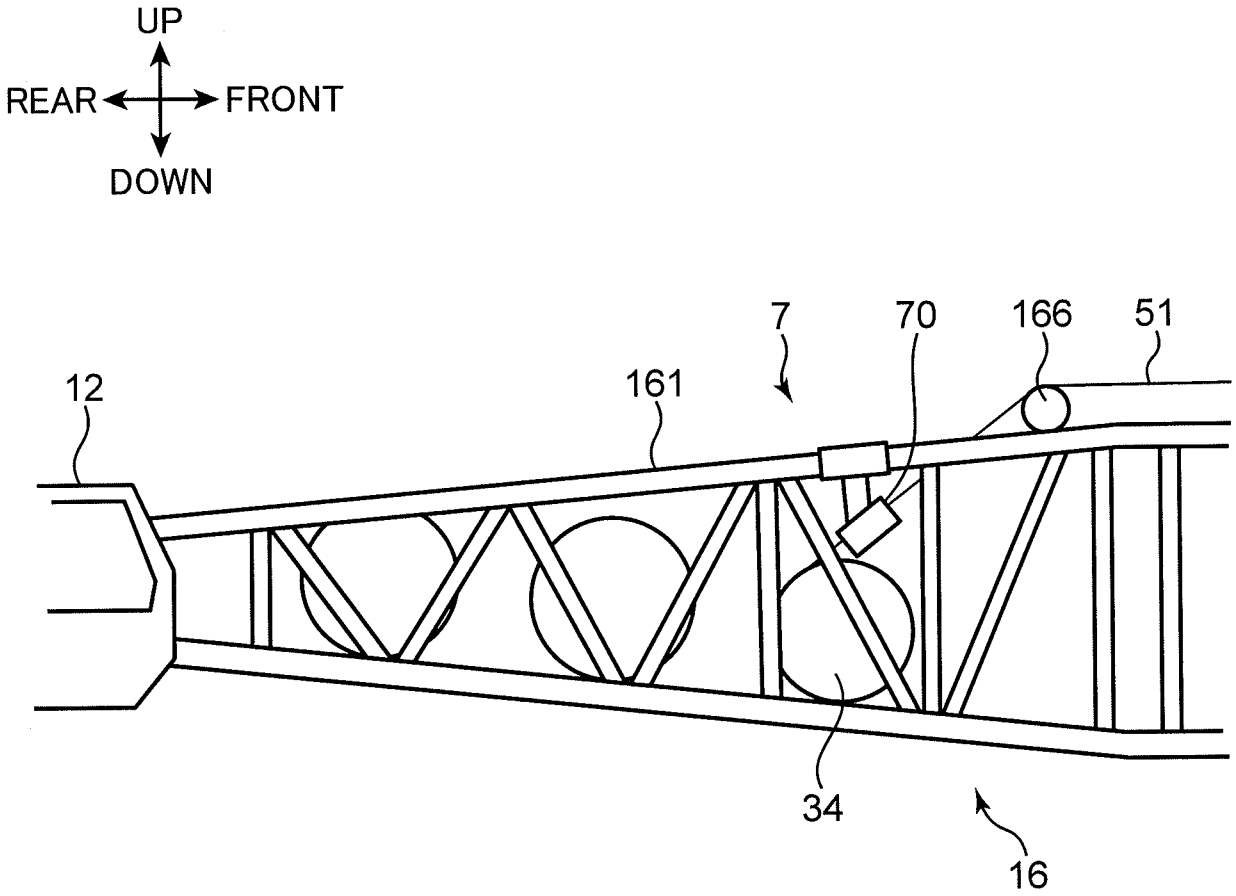

FIG.33

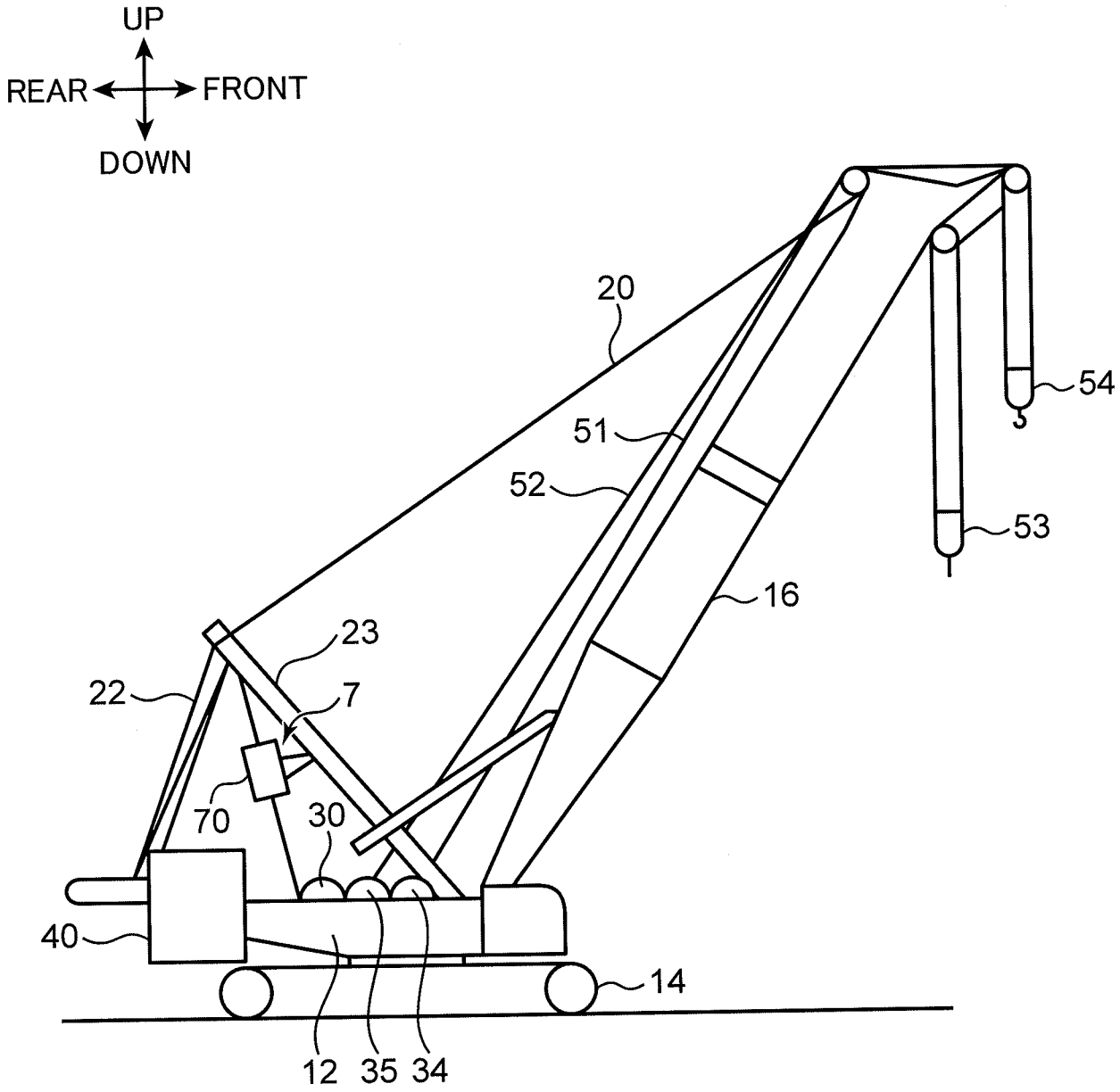

FIG.34

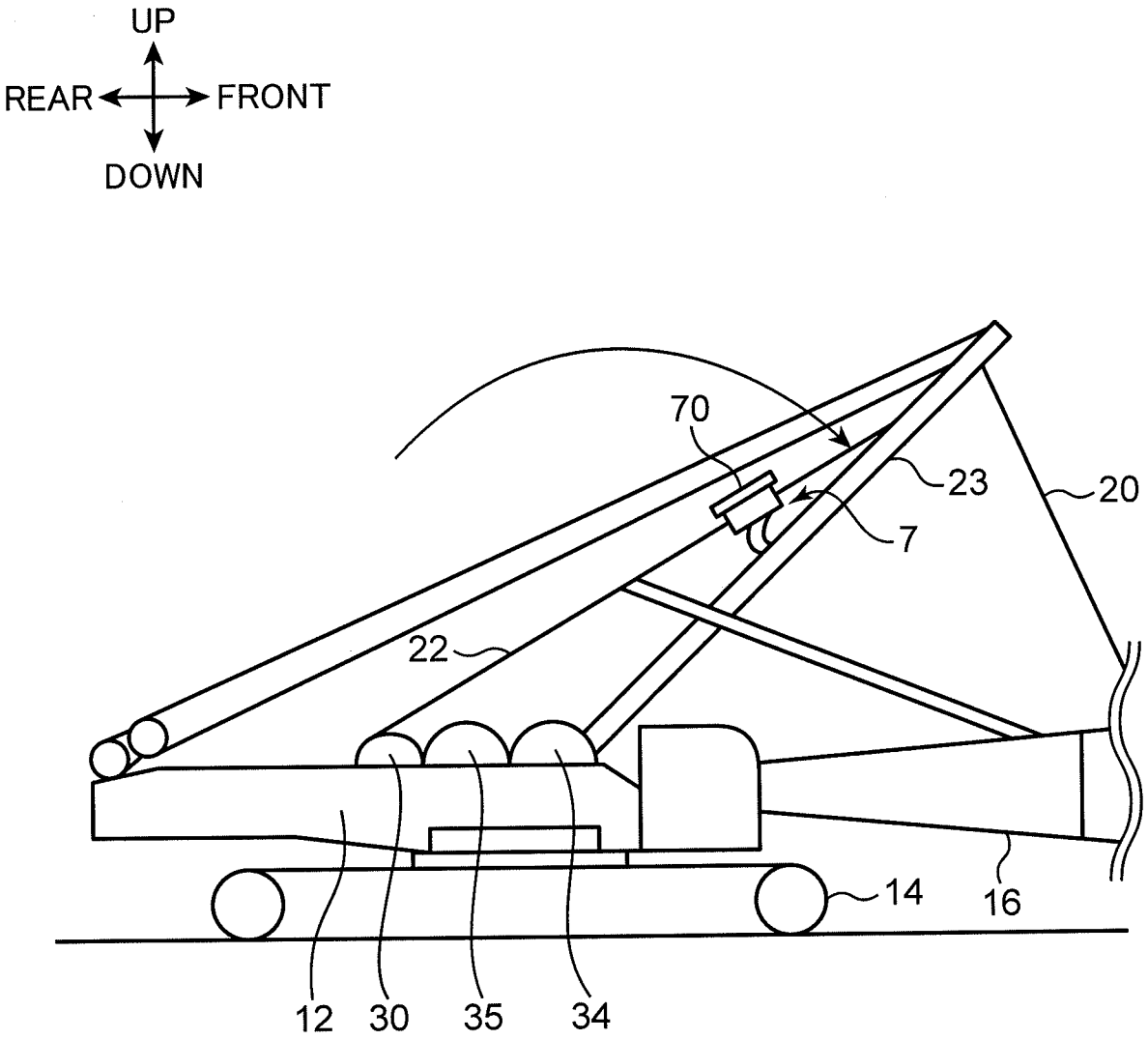

FIG.35A

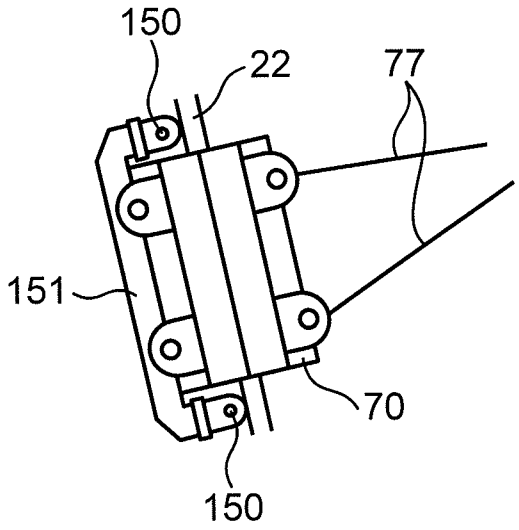

FIG.35B

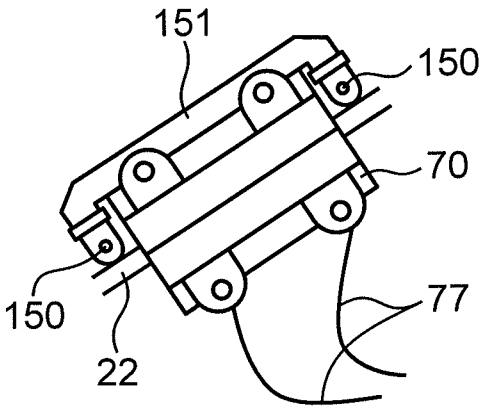

FIG.36

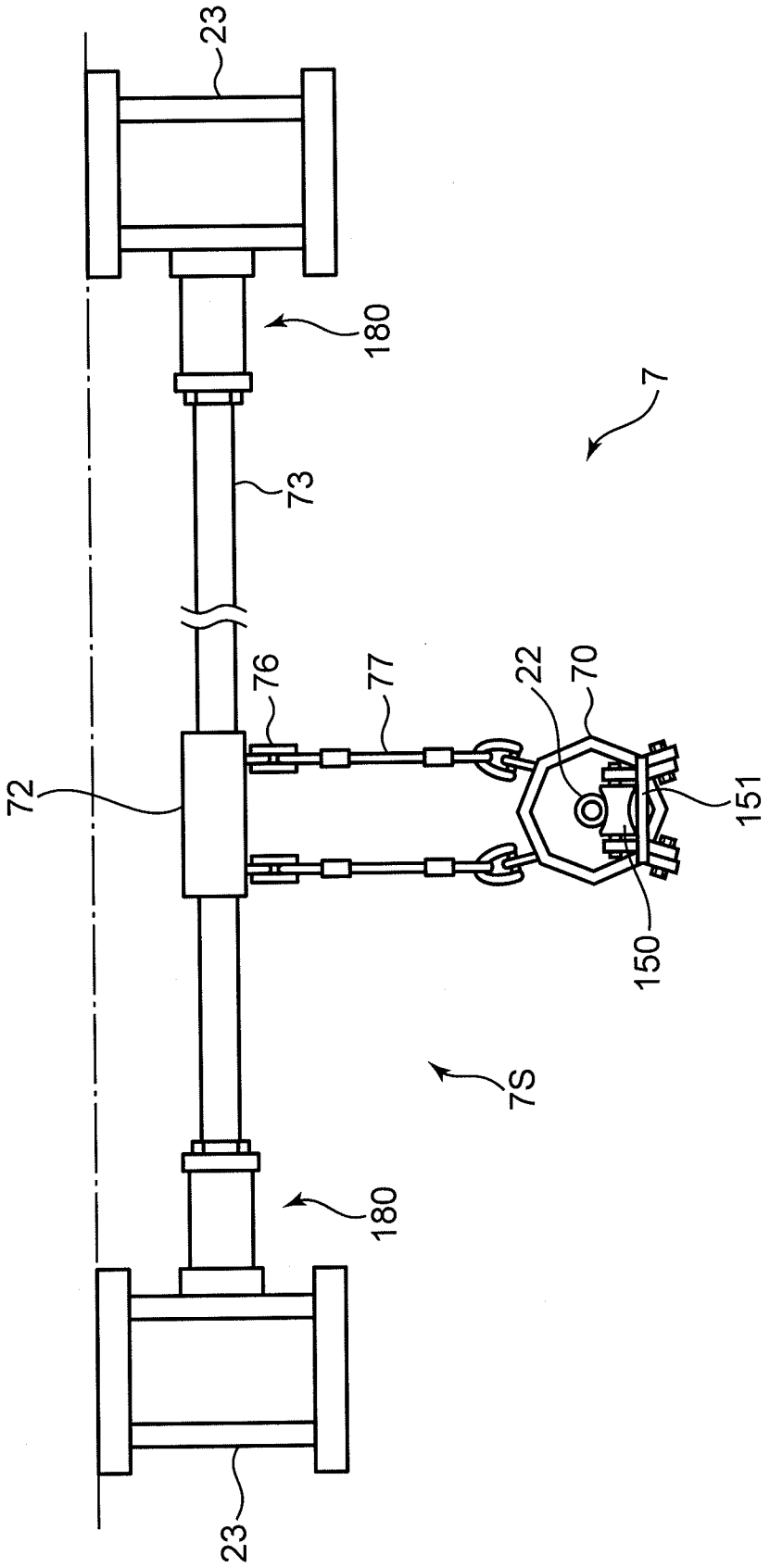

FIG.37A

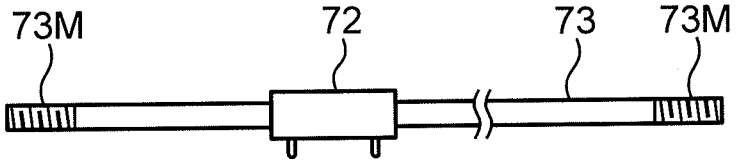

FIG.37B

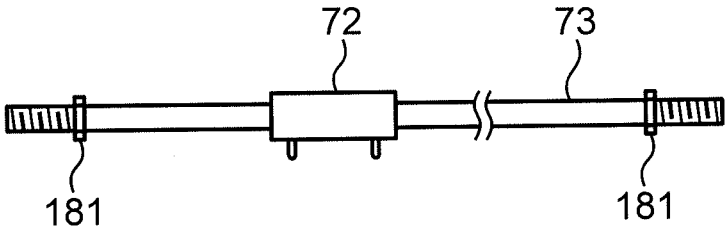

FIG.37C

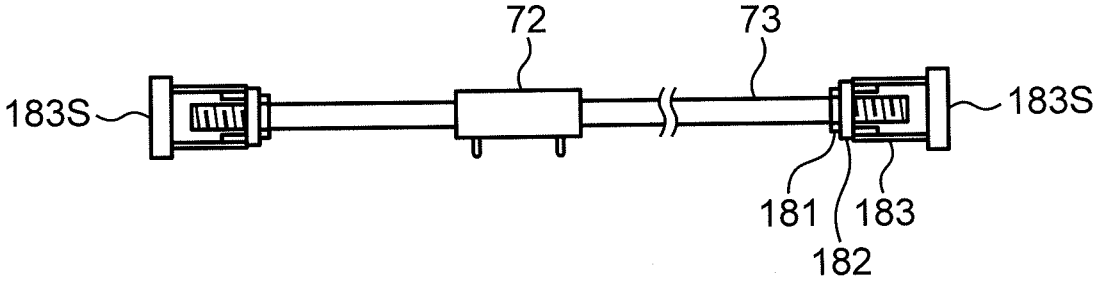

FIG.37D

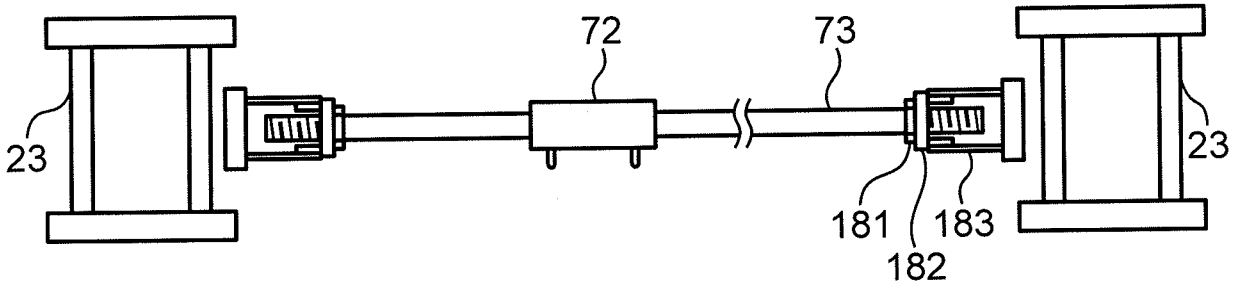

FIG.37E

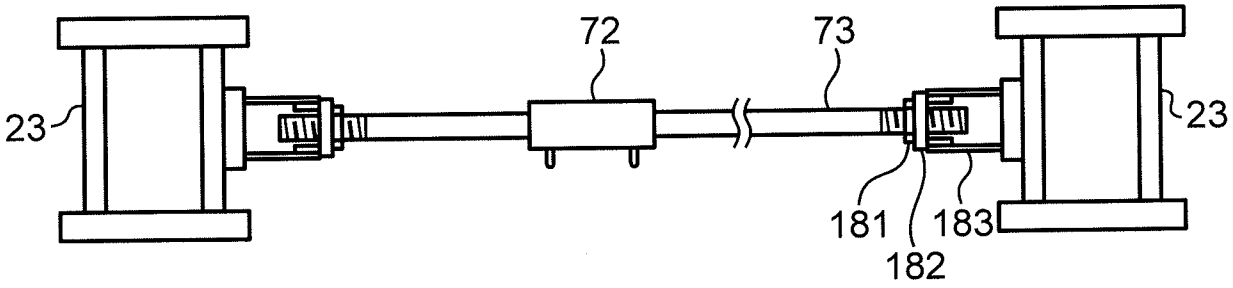

FIG.38

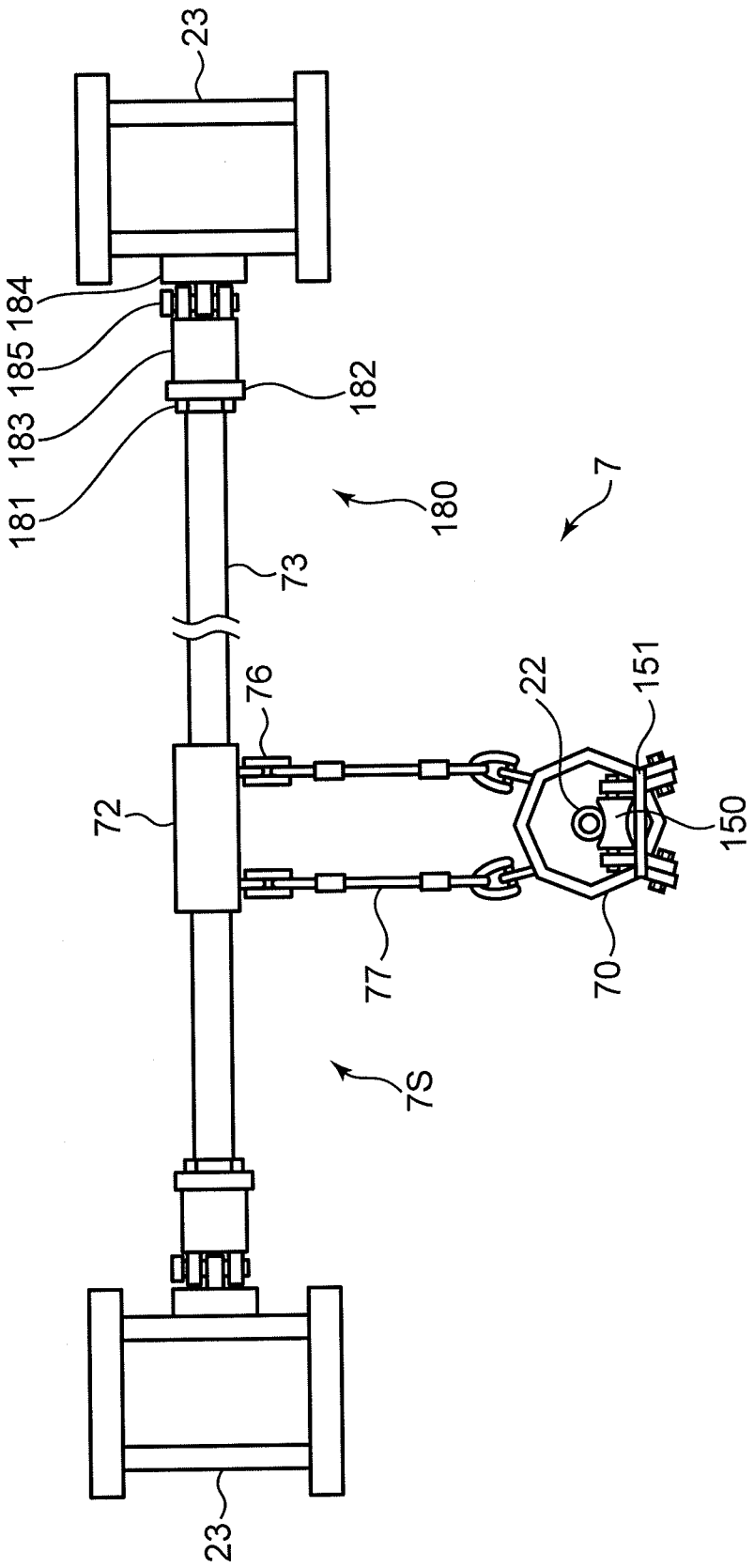

FIG.39

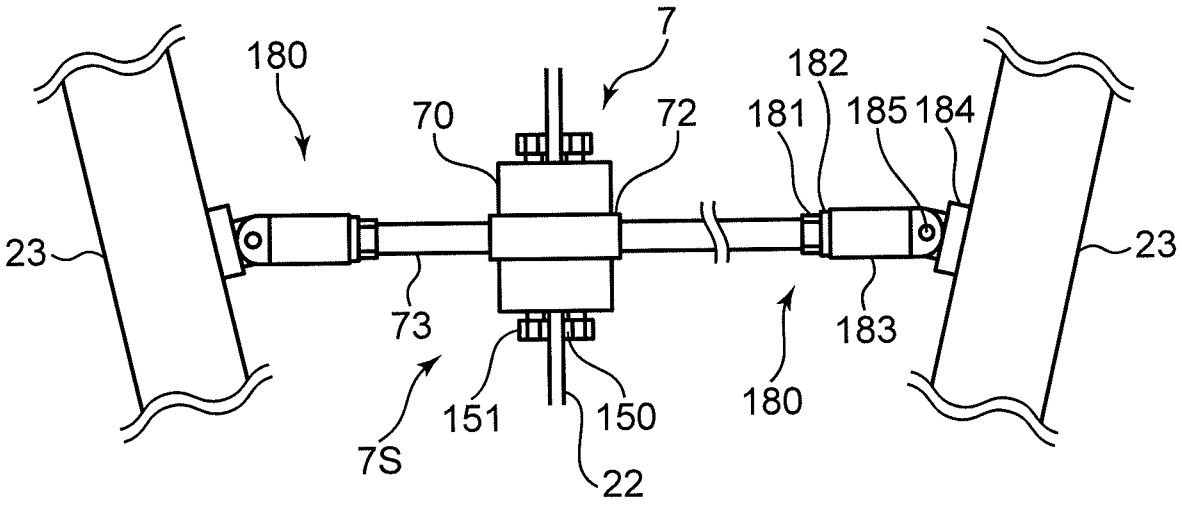

FIG.40

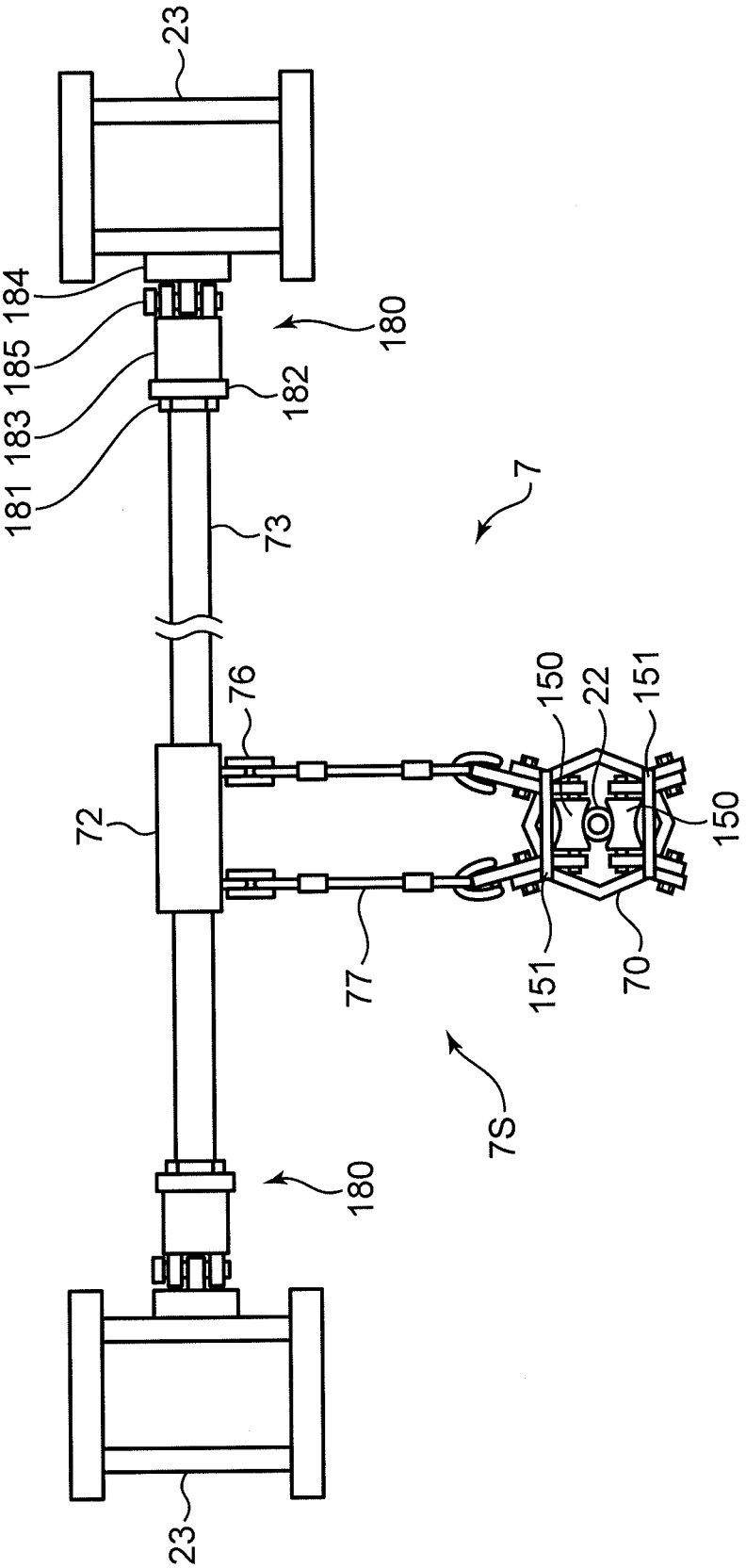
23
184
185
183
181
180
182
73
7
76
150
22
151
72
150
77
151
70
7S
180
23