(12)特許協力条約に基づいて公開された国際出願

(19) 世界知的所有権機関
国際事務局

G00002

(43) 国際公開日
2002年1月17日 (17.01.2002)

PCT

(10) 国際公開番号
WO 02/04825 A1

(51) 国際特許分類7: F16C 17/00, 17/26, 33/00, 33/28

(21) 国際出願番号: PCT/JP01/05979

(22) 国際出願日: 2001年7月10日 (10.07.2001)

(25) 国際出願の言語: 日本語

(26) 国際公開の言語: 日本語

(30) 優先権データ:
特願2000-207952 2000年7月10日 (10.07.2000) JP

(71) 出願人 (米国を除く全ての指定国について): 株式会社 三協精機製作所 (KABUSHIKI KAISHA SANKYO SEIKI SEISAKUSHO) [JP/JP]; 〒393-8511 長野県諏訪郡下諏訪町5329番地 Nagano (JP).

(72) 発明者; および
(75) 発明者/出願人 (米国についてのみ): 五明正人 (GOMYO, Masato) [JP/JP]. 佐藤正章 (SATO, Masaaki) [JP/JP]; 〒393-8511 長野県諏訪郡下諏訪町5329番地 株式会社 三協精機製作所内 Nagano (JP).

(74) 代理人: 村瀬一美(MURASE, Kazumi); 〒105-0003 東京都港区西新橋2丁目12番7号 西新橋立川ビル別館 Tokyo (JP).

(81) 指定国 (国内): CN, JP, SG, US.

添付公開書類:
— 国際調査報告書

２文字コード及び他の略語については、定期発行される各PCTガゼットの巻頭に掲載されている「コードと略語のガイダンスノート」を参照。

(54) Title: HYDRODYNAMIC BEARING DEVICE

(54) 発明の名称: 動圧軸受装置

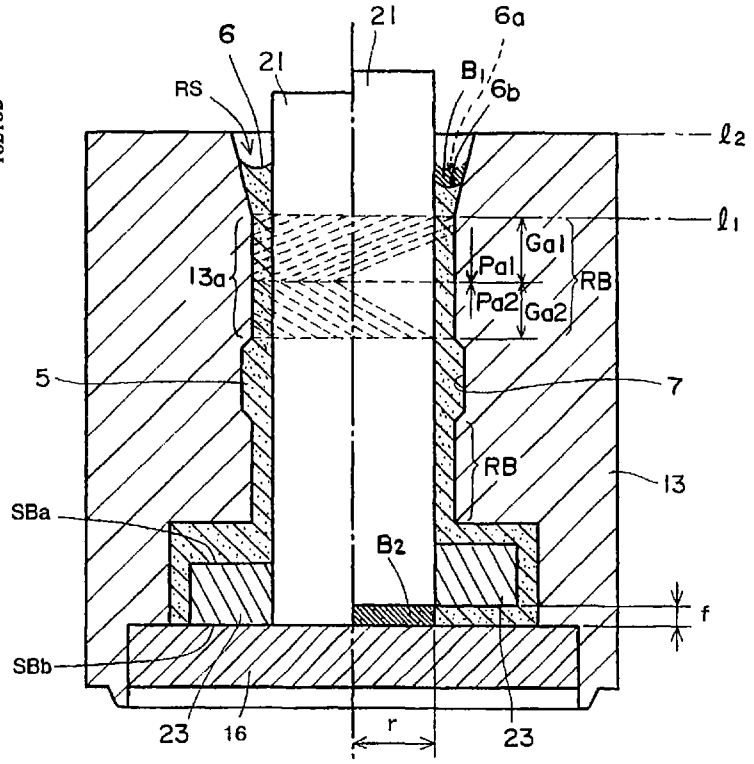

(57) Abstract: A hydrodynamic bearing device which supports a relative-rotation shaft or bearing by the hydrodynamic pressure of lubricating fluid which develops in a clearance between the bearing and the shaft, wherein leakage of the lubricating fluid to the outside of the bearing is satisfactorily prevented by a simple arrangement. A fluid pressing means applying to the lubricating fluid (5) an inward pressing force directed from the opening side of the bearing clearance toward the closed side, for example, a hydrodynamic pressure producing groove (13a) in which a hydrodynamic pressure (Pa1) having an inward vector component and a hydrodynamic pressure (Pa2) having an outward vector component are simultaneously produced, the hydrodynamic pressures being unbalanced in that the hydrodynamic pressure (Pa1) having an inward vector component is prevailing, has an inward pressing force imparting action which ensures that the lubricating fluid (5) in the bearing clearance is constantly pressed toward the closed side of the bearing clearance to hold that the gas-liquid interface (6) of the lubricating fluid (5) so that it is pushed inward. By setting the filling amount of the lubricating fluid (5) at a value with which the fluid pressing means is filled with the lubricating fluid (5) even upon occurrence of relative movement of the gas-liquid interface (6) toward the bearing clearance, which relative movement takes place upon relative upward movement of a thrust plate (16) or the like in the thrust direction, leakage of the lubricating fluid (5) through a seal portion (RS) is satisfactorily prevented.

[続葉有]

162162
WO 02/04825 A1