(12) INTERNATIONAL APPLICATION PUBLISHED UNDER THE PATENT COOPERATION TREATY (PCT)

(19) World Intellectual Property Organization
International Bureau

(43) International Publication Date
21 August 2025 (21.08.2025)

WIPO | PCT

(10) International Publication Number
WO 2025/174847 A1

(51) International Patent Classification:
H01L 21/67 (2006.01) *C23C 16/455* (2006.01)

(21) International Application Number:
PCT/US2025/015543

(22) International Filing Date:
12 February 2025 (12.02.2025)

(25) Filing Language: English

(26) Publication Language: English

(30) Priority Data:
63/554,926 16 February 2024 (16.02.2024) US

(71) Applicant: **LAM RESEARCH CORPORATION** [US/US]; 4650 Cushing Pkwy., Fremont, California 94538 (US).

(72) Inventors: **JUDGE, Jon Garret**; 4650 Cushing Pkwy., Fremont, California 94538 (US). **BOATRIGHT, Daniel**; 4650 Cushing Pkwy., Fremont, California 94538 (US).

(74) Agent: **OTIS, Ryan J.** et al.; WEAVER AUSTIN VILLENEUVE & SAMPSON LLP, P.O. Box 70250, Oakland, California 94612-0250 (US).

(81) Designated States *(unless otherwise indicated, for every kind of national protection available)*: AE, AG, AL, AM, AO, AT, AU, AZ, BA, BB, BG, BH, BN, BR, BW, BY, BZ, CA, CH, CL, CN, CO, CR, CU, CV, CZ, DE, DJ, DK, DM, DO, DZ, EC, EE, EG, ES, FI, GB, GD, GE, GH, GM, GT, HN, HR, HU, ID, IL, IN, IQ, IR, IS, IT, JM, JO, JP, KE, KG, KH, KN, KP, KR, KW, KZ, LA, LC, LK, LR, LS, LU, LY, MA, MD, MG, MK, MN, MU, MW, MX, MY, MZ, NA, NG, NI, NO, NZ, OM, PA, PE, PG, PH, PL, PT, QA, RO, RS, RU, RW, SA, SC, SD, SE, SG, SK, SL, ST, SV, SY, TH, TJ, TM, TN, TR, TT, TZ, UA, UG, US, UY, UZ, VC, VN, WS, ZA, ZM, ZW.

(84) Designated States *(unless otherwise indicated, for every kind of regional protection available)*: ARIPO (BW, CV, GH, GM, KE, LR, LS, MW, MZ, NA, RW, SC, SD, SL, ST, SZ, TZ, UG, ZM, ZW), Eurasian (AM, AZ, BY, KG, KZ, RU, TJ, TM), European (AL, AT, BE, BG, CH, CY, CZ,

(54) Title: APPARATUS AND SYSTEM FOR FLOW CONTROL AND TUNING IN SEMICONDUCTOR PROCESSING

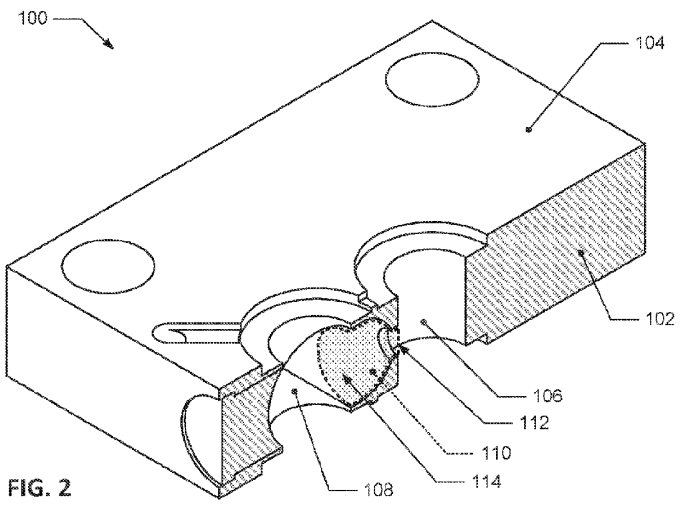

FIG. 2

(57) Abstract: A bypass plate for use in semiconductor processing tools. The bypass plate includes a body partially defined by a first side and a second side opposite the first side, an inlet extending through the body between the first side and the second side, an outlet extending through the body between the first side and the second side, and a bypass passage. The first side is configured to interface with a valve. The bypass passage extends within the body and only between the inlet and the outlet, fluidically connects the inlet and the outlet within the body, and is only fluidically connected to the inlet and the outlet.

WO 2025/174847 A1

[Continued on next page]

DE, DK, EE, ES, FI, FR, GB, GR, HR, HU, IE, IS, IT, LT, LU, LV, MC, ME, MK, MT, NL, NO, PL, PT, RO, RS, SE, SI, SK, SM, TR), OAPI (BF, BJ, CF, CG, CI, CM, GA, GN, GQ, GW, KM, ML, MR, NE, SN, TD, TG).

Published:

— *with international search report (Art. 21(3))*