DRAWINGS

FIG. 1

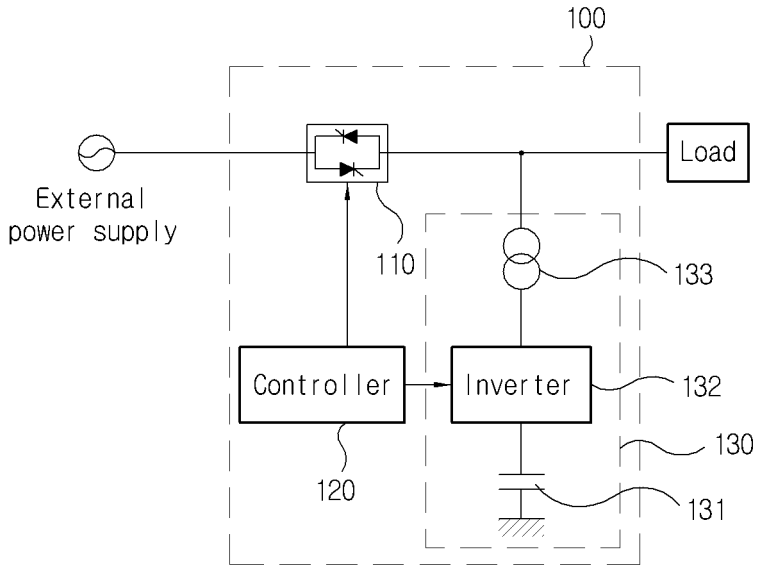

5

FIG. 2

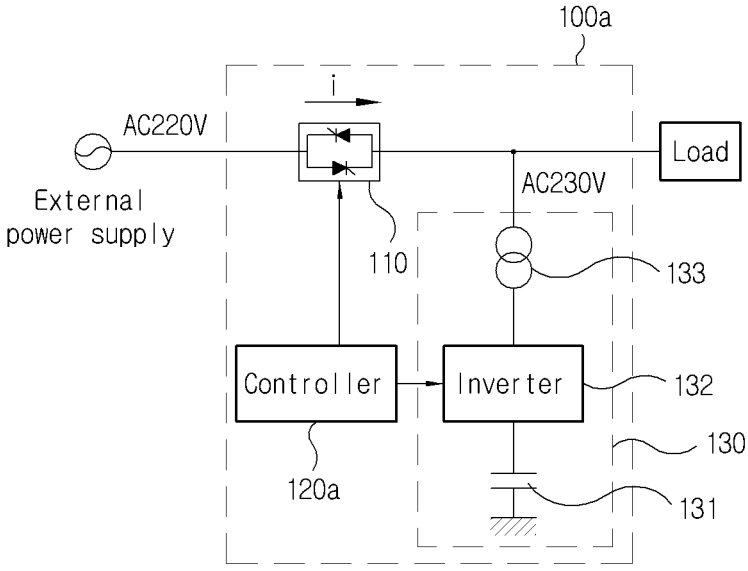

FIG. 3

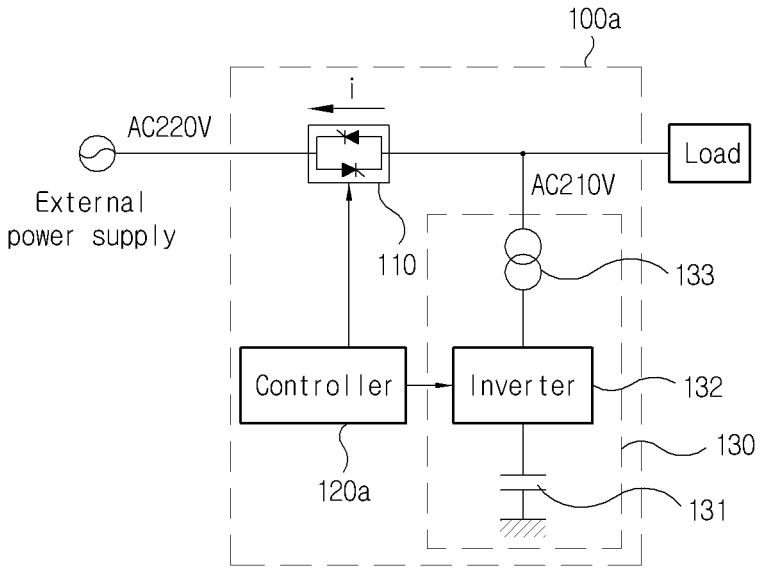
100a
i
AC220V
Load
External
power supply
AC210V
110
133
Controller
Inverter
132
130
120a
131

5