20010254B-1
verified Eng. translation
of PCT and annexes

Verification of Translation

I, Georg Both of UEXKÜLL & STOLBERG, Patent Attorneys in Hamburg, Germany, hereby declare that I am conversant with the English and German languages and I certify that to the best of my knowledge and belief the following is a true and correct translation of International Patent Application No. PCT/EP99/08427 filed November 8, 1999, as well as the claims annexed to the International Preliminary Examination Report of International Patent Application No. PCT/EP99/08427.

Hamburg, April 24th, 2001

Georg Both

Georg Both

System for supplying an inhalable aerosol

The invention relates to a system for supplying an inhalable aerosol as well as components of such a system. This system is in particular suitable as a smoking article for the preparation of smoke aerosol for smokers.

Upon smoking of conventional cigarettes, most of the tobacco is burned, not during the draws, but in the pauses between draws. This leads to the formation of so-called side-stream smoke, which is often felt to be annoying by non-smokers.

To overcome this problem, numerous new smoking articles have been proposed. A principle common to such developments is that it is not the combustion heat of the tobacco, but other energy sources, that are used to release the smoke aerosol. The formation of side-stream smoke is thereby largely avoided. Substitute materials, such as special leaf tobaccos or carrier materials treated with aromatic substances, are often used instead of tobacco in the proposed smoking articles for aerosol formation.

For example, cigarette-like smoking articles are described in the US patents 5 060 666, 5 067 499 and 5 099 861 in which the thermal energy of a glowing carbon element is transferred to aerosol-forming material which contains aromatics and an aerosol-former such as glycerine in addition to tobacco or tobacco extracts. The combustion gases of the heating element are inhaled with the smoke aerosol, which leads to an increased absorption of carbon monoxide by the smoker. In addition, the whole smoking article must be disposed of after smoking, which

leads to an increased incidence of remnants with a complex composition and associated disposal problems.

Devices are also known in which a substrate portion is heated by means of electric energy in order to release smoke aerosol. Such a device, which must be held in the hand and cannot be carried in the mouth due to its size and weight, is described in the US patent 4 141 369. Further cigarette-like smoking articles in which special tobacco aroma substrates are electrically heated by means of battery current and produce an inhalable aerosol in the process, are disclosed in US patents 5 095 921, 5 179 666 and 5 269 327. A cigarette for an electrically heated smoking system is shown in the US patent 5 499 636. All these devices, however, are relatively heavy and unwieldy.

Smoking devices are known from the US patent 4 474 181 in which nicotine and tobacco-simulating substances are indirectly heated and inhaled, e.g. via combustible cellulose foams.

WO 97/48294 shows a further system for the preparation of an inhalable aerosol. A burner and a fuel reservoir which contains a heating means to power the burner are located in a housing to be held in the hand. The rising, hot combustion gases flow through a heat exchanger in which ventilation channels are arranged. The ventilation channels are connected at one end to the outside air and open out at the other end into a pipe-like flow channel, starting from the upper region of the housing, which is designed as a mouthpiece at its free end. The middle section of the flow channel is occupied by a substrate portion which is indirectly heated by the air sucked in

by the user and heated via the heat exchanger, to release aerosol. This system is also relatively heavy and unwieldy and must be opened to insert a new substrate portion.

The object of the invention is to create a light, manageable system which can be carried in the mouth by the user, which contains a re-usable inhalation device and in particular can serve as a smoking article which offers a similar taste impression to conventional cigarettes, but in which, during use, no side-stream smoke is produced between draws.

This object is achieved by a system with the features of claim 1 which has an inhalation device with the features of claim 26 and a substrate portion with the features of claim 28. Advantageous versions of the invention emerge from the dependent claims.

The system according to the invention for supplying an inhalable aerosol has an inhalation device which has a rod-like housing with a rear mouth-side region and a front region. Arranged in the front region of the housing is a substrate holder, heatable by a heating apparatus, which is accessible via a feed opening preferably located on the front side of the housing. A flow channel leads from the substrate holder to the rear end of the housing. The heating apparatus is set up to generate heat through thermal or catalytic combustion, a fuel reservoir preferably being arranged in the rear region of the housing. The system furthermore contains a substrate portion which is set up to be inserted into the substrate holder through the feed opening and which contains

This Sheet Has Been Replaced



THIS SHEET HAS BEEN REPLACED

aerosol-forming material inside an envelope which has an air inlet opening and an aerosol outlet.

As the energy required to heat the aerosol is drawn from a gaseous and/or liquid fuel, an economical and easily obtainable energy carrier of high energy density is available. The inhalation device can therefore be of such a light and manageable design, even when it contains a full fuel reservoir, that it can be carried without difficulty in the user's mouth. The rod-shaped housing sits easily in the hand and leads the user more or less to feel that he is smoking a cigarette with a cigarette tip or a cigar. The substrate portion is inserted into the heatable substrate holder in the front region of the rod-shaped housing, via a feed opening which is preferably located on the front side of the housing. This further strengthens the impression of using a cigar or cigarette with cigarette tip. The substrate portion is heated via the heatable substrate holder in order to release inhalable aerosol which is guided via the flow channel to the rear end of the housing.

In the rear region of the housing, the inhalation device can have a mouthpiece which is connected to the flow channel and is preferably a poor conductor of heat, in order that no unpleasant high temperatures arise for the user. Instead of the mouthpiece, it is conceivable to insert a filter constructed as a filter mouthpiece into the flow channel in the rear region of the housing. In a variant, a filter is inserted into the flow channel at a different position; such a design can also be used in connection with a fixed mouthpiece.

In the case of a preferred design, the substrate holder of the inhalation device has at least one heating surface which is preferably a hollow cylinder or channel-shaped. The substrate holder can for example have two heating surfaces arranged parallel to each other, the reciprocal distance between which is preferably adjustable. It is conceivable that the setting of the distance takes place automatically according to the temperature, e.g. with the help of a bimetallic strip. In the case of a preferred design, the substrate holder of the inhalation device has, within the heating surfaces, a casing which is a good conductor of heat, is preferably provided with bores and which is set up to lie against a substrate portion inserted into the substrate holder. These versions ensure a good thermal contact (either directly via the heating surfaces or via the heat-conducting casing) between the heating surfaces and the zone of the substrate portion which is located in the region of the heating surfaces. The heating surfaces or the casing, however, need not touch the substrate portion directly; versions in which a distance between the former and the substrate portion is envisaged and the heat transport takes place e.g. by radiation, are also conceivable.

Preferably, the substrate holder of the inhalation device has, behind the heating surfaces, a rear cavity into which the rear region of an inserted substrate portion can be pushed. This design allows the user to heat a substrate portion and to inhale the released aerosol, a section at a time. In the process, he progressively pushes the substrate portion slightly further back, preferably after every draw, the consumed part of the substrate portion being received by the rear cavity, until the whole substrate portion is consumed (smoked).

To prevent the substrate portion being pushed too far into the housing of the inhalation device, a stop for the substrate portion can be provided at the rear end of the rear cavity.

In the case of a preferred version, the heating surfaces of the inhalation device are set up to be heated through catalytic combustion of a gaseous and/or liquid fuel. A catalytic combustion avoids difficulties when controlling the flames from the heating apparatus, which favours a compact design.

A fuel reservoir preferably refillable from the outside can be arranged in the rear region of the housing of the inhalation device. Alternatively, a design is conceivable in which a replaceable refill cartridge with fuel is fitted into the housing. Customary combustible substances, which can be gaseous or liquid at room temperature, as given in detail in the claims, can be used as fuels.

The inhalation device can have a switching apparatus which is connected to an ignition device, which is set up to ignite the fuel and which preferably operates piezoelectrically, and to a valve apparatus set up to release fuel from the fuel reservoir. In the case of a preferred version, the switching apparatus is designed purely mechanically and has a ring, axially movable on the front region of the housing and preferably a poor heat conductor, which is preferably fixable in two positions. Thus for example, the piezoelectrically activated ignition process can be triggered by moving the ring, the valve apparatus opening simultaneously in order to release fuel for the catalytic combustion; the ring is

then turned to lock, the valve apparatus remaining open and the heating process continuing. When sufficient time has elapsed, e.g. after a draw has ended, the user can unlock the ring by turning it back and pushing it back into its initial position, which preferably takes place with the support of a spring so that the valve apparatus shuts again and the heating process is ended.

Preferably, the front region of the housing of the inhalation device has air inlets for the supply of combustion air to the heating apparatus. The combustion gases issuing from the heating apparatus (essentially carbon dioxide and water) are added to the inhalable aerosol in a preferred version of the invention, a favourable air, combustion gas and aerosol control being achievable through the user's draws. In particular in the case of catalytic combustion, the combustion gases contain such small quantities of harmful substances, such as e.g. carbon monoxide, that this is harmless. In another preferred version of the invention, on the other hand, the combustion gases are kept away from the inhalable aerosol.

In the case of an advantageous design, the housing of the inhalation device has a window in front of a component, e.g. a heating surface, which lights up when the heating apparatus is in operation. The user can then easily monitor the operative status of the inhalation device.

The housing of the inhalation device can be constructed in one or several parts. In the latter case, it is preferably in two parts and has a detachable connection, e.g. in the middle region between the front region of the housing in which the heatable substrate holder is

arranged and the rear region of the housing in which the fuel reservoir is located. The housing can be opened at the detachable connection, e.g. for cleaning purposes. The material for the housing of the inhalation device should be heat-resistant. E.g., duroplastics, multi-component plastics, hardwoods, high-grade woods, root timber and/or metal can be considered.

The substrate portion preferably has a cylindrical shape, the envelope being arranged as cylinder casing and the front sides of the cylinder being set up as air inlet and as aerosol outlet. The envelope is preferably low-porous to air-impermeable in order to avoid side-stream smoke. In its front region, the substrate portion can have an insulating casing which preferably projects over the front end of the envelope, so that the user does not come into contact with hot surfaces upon pushing the substrate portion back into the housing of the inhalation device. The aerosol-forming material of the substrate portion can include a largely inert carrier material or tobacco material and other additives. Preferably, the material has a high proportion of polyols which act as aerosol formers. It is also conceivable that the substrate portion is a thin, filterless cigarette customary in the trade per se which contains polyols in a proportion of 5 wt.-% to 10- wt.-%. Details of possible designs of the substrate portion are given in the claims.

In the following, the invention is explained in more detail using an embodiment. The drawings show in:

Figure 1 a schematic longitudinal section through a system according to the invention designed as a smoking article for supplying an inhalable

aerosol, in which a substrate portion is inserted into an inhalation device, and

Figure 2 a longitudinal section through a substrate portion.

In Figure 1 it is shown how a substrate portion 1 is inserted into an inhalation device which serves as a smoking apparatus. Figure 2 shows the substrate portion 1 in more detail. In the case of this version of the substrate portion 1, aerosol-forming material 2 is located inside a cylindrical sleeve 3. The sleeve 3 leaves the front sides of the cylinder free so that an air inlet 4 and an aerosol outlet 5 are formed there.

The aerosol-forming material 2 can contain e.g. cut leaf tobacco, cut tobacco ribs, reconstituted tobacco or a carrier material treated with aromatic substances. Leaf and rib cuts can also be used in expanded form. Both organic materials, such as e.g. paper or cellulose fibres, and inorganic materials, such as e.g. silica gel, can be used as carrier materials for aromatic substances. Any mixtures of the components named can also be used. Numerous components and constituents for the aerosol-forming material are named in the claims, so that numerous variants are conceivable.

To increase aerosol formation, the aerosol-forming material 2 preferably contains a high proportion of a polyol or several polyols, e.g. glycerine and/or propylene glycol, e.g. when using largely inert carrier materials such as aluminium oxide, silica gel, charcoal, cellulose fibres, lignin granules, zeolites, aluminae or meerschaum or combinations thereof in the range from 10

wt.-% to 60 wt.-%. When using tobacco materials, the preferred proportion of polyols is 10 wt.-% to 40 wt.-%. Another possibility for increasing aerosol formation is the use of aerosol-forming materials with a moisture content which lies clearly above the equilibrium moisture content; thus e.g. tobacco, the equilibrium moisture content of which is approx. 10% to 12%, can be used with a moisture content of 20%. In this case, suitable packaging is to be used to ensure that there is no loss of moisture before use.

The sleeve 3 can consist of paper, plastic film or metal foil. A multi-layered sleeve made from the named components can also be used. However, a single-layer sleeve made from paper or metal-coated paper is preferred. Low-porous or virtually air-impermeable cigarette paper which preferably has a high proportion of mineral additives is particularly advantageous. This ensures that practically no side-stream smoke is produced upon heating and smoking of the substrate portion.

In the case of a preferred design, the substrate portion 1 is surrounded in its front region, e.g. in the region of the air inlet 4, by an additional insulating sleeve (not shown in in Figures 1 and 2) which preferably projects over the front end of the sleeve 3. This insulating sleeve ensures that the user does not come into contact with unpleasantly hot surfaces when he pushes the substrate portion 1 deeper into the inhalation device when smoking (see below).

It is also conceivable to use as substrate portion a thin, filterless cigarette customary in the trade per se

which contains polyols in a proportion of 5 wt.-% to 10-% wt.

In the following, two further examples of designs of the substrate portion 1 are described.

Example 1

An American-blend tobacco mixture containing 30% Burley tobacco, 40% expanded Virginia tobacco, 20% non-expanded Virginia tobacco and 10% Orient tobacco was conditioned and sprayed with 12 wt.-% of an aqueous casing containing 80 wt.-% glycerine. The tobacco was then cut with 0.8 mm cut width and dried to a moisture content of 12%. 180 kg of this cut tobacco were mixed with 20 kg expanded rib cut. A continuous strand with a diameter of 5 mm and a packing density of 200 mg/ml was prepared from this mixture on a cigarette strand machine. An air-impermeable paper coated on the outside with aluminium was used as sleeve. The continuous strand was cut into individual portions 40 mm in length.

Example 2

A paper leaf tobacco prepared by known methods and containing 12 wt.-% propylene glycol was cut with a cutting width of 0.8 mm, fed to a cigarette strand machine as in Example 1 and encased in this with a cigarette paper, the cigarette paper having an air permeability of 5 CU. By cutting the continuous strand into lengths (6 mm diameter), substrate portions each with a length of 50 mm were obtained; the packing density was 240 mg/ml.

In principle, the use of a substrate portion, which is provided with a filter customary in the trade behind the aerosol outlet 5, is also conceivable. However, it must be ensured that, when inserting such a substrate portion into the inhalation device, it is not the filter but the aerosol-forming material 2 in front of the filter that is heated.

Figure 1 shows a version of an inhalation device 10 in a schematic longitudinal section. The inhalation device 10 has a rod-like or cigarette-shaped housing 12 with a front region 14 and a rear mouth-side region 16. The rear end-piece of the rear region 16 is designed as a mouthpiece 18, see Figure 1.

The housing 12 preferably consists of a heat-resistant material such as a duroplastic, a multi-component plastic, a hardwood, a high-grade wood, root timber or metal or several such materials. To prevent the user from coming into contact with hot surfaces, critical points are provided with heat insulation or are composed of heat-insulating materials.

In the embodiment, the housing 12 is designed in two parts, the front region 14 and the rear region 16 being able to be joined via a connection 20. The front region 14 and the rear region 16 of the housing 12 can be plugged into each other at the connection 20, a guide not shown in Figure 1, in which a projection engages in a groove, ensuring a defined position of the rear region 16 in relation to the front region 14 and preventing twisting. A thin-walled retaining nut, which engages at an external thread at the rear region 16, secures this. An insulating ring 22 largely prevents heat transmission

from the front region 14, which is heated in operation, of the housing 12 to the rear region 16 with the mouthpiece 18. When the housing 12 is opened at the connection 20, the inhalation device 10 can be cleaned.

A feed opening 24, through which a substrate portion 1 can be pushed into the inside of the housing 12, is located on the front side 23 of the housing 12. A substrate holder 26 which includes a guide sleeve 28 matched to the external diameter of the substrate portion 1 serves to hold the substrate portion 1. A heating surface 30, constructed as a hollow cylinder in the embodiment, is arranged behind the guide sleeve 28. Behind the heating surface 30, the substrate holder 26 has a rear cavity 32 into which the rear region of an inserted substrate portion 1 can be pushed.

An axially arranged flow channel 34 extends over the full length of the rear region 16 of the housing 12 and reaches from the rear cavity 32 to the rear end of the mouthpiece 18.

The heating surface 30 is a component of a heating apparatus, operating as a flameless incandescent catalyst in the embodiment, for the heating of the substrate holder 26. The combustion air for the operation of the heating apparatus can enter the housing 12 via air inlets 36 in the front region 14. When the heating surface 30 is at a high temperature, it heats the zone of the substrate portion 1 which is located near it. Therefore, when the heating surface 30 is designed in the embodiment as a hollow cylinder, it heats the region of the substrate portion 1 just located in its interior. In the embodiment, the internal diameter of the heating surface

30 is greater than the external diameter of the substrate portion 1. The heat is transported predominantly by radiation from the heating surface 30 to the substrate portion 1. The heating surface 30 can also be arranged so that a heat transport takes place by conduction of heat. In this case, it is advantageous if the heating surface 30 does not touch the substrate portion 1 directly, but a casing, preferably provided with bores, which consists of a material with good heat-conducting properties, such as e.g. aluminium, and whose dimensions are matched to the substrate portion 1, is arranged inside the heating surface 30, so that it preferably lies directly against the substrate portion 1 (not shown in in Figure 1). Numerous variants are conceivable for the design of the heating surface 30. Thus, several heating surfaces can also be provided, e.g. two heating surfaces arranged parallel to each other, or other shapes can also be chosen for the heating surface, e.g. a shape with a groove-like profile. It is essential that the heating surface 30 effects a heating of the zone of the substrate portion 1 located in its region via the outside of the substrate portion 1, i.e. a direct heating as opposed to an indirect heating in which heated gas (above all, air) is drawn through the substrate portion.

The fuel needed to operate the heating apparatus, e.g. butane gas, pentane or isopropanol, is located in a fuel reservoir 38 which is arranged in the rear region 16 of the housing 12. The fuel reservoir 38 can be refilled via an outwardly-directed refill pipe 40, which is provided with closure. In the embodiment, the fuel reservoir 38 is designed ring-shaped, the flow channel 34 leading through its axial region. Instead of a refillable fuel reservoir 38, a fuel reservoir designed as a refill cartridge can

also be provided which is inserted in its entirety into the rear region 16 of the housing 12. Alternatively, it is conceivable to construct the whole rear region 16 of the housing 12 as a disposable unit which is replaced when the fuel reservoir 38 is empty.

To supply fuel from the fuel reservoir 38 to the heating surface 30, a valve 42 must be opened which opens out into a fuel line 44 which is connected to the heating surface 30. As the front region 14 can be separated from the rear region 16 of the housing 12 in the embodiment, the fuel line 44 must also have a point of separation which is designed as a sealed coupling 46.

A mechanical switching apparatus which includes a ring 48, which is axially movable on the front region 14 of the housing 12 and is a poor heat-conductor, is used to ignite the fuel and to activate the valve 42. The ring 48 is provided with a gripping surface on its outside. When the ring 48 is pushed backwards, i.e. in the direction of the arrows drawn in Figure 1, the valve 42 is opened so that fuel can flow from the fuel reservoir 38 to the heating surface 30, and simultaneously a piezoelectric igniter 50 is activated, which starts the catalytic combustion of the fuel. The ring 48 can be locked in the pushed-back position by turning it. The valve 42 remains opened in this position of the ring 48 so that catalytic combustion continues and the heating surface 30 emits heat even if the igniter 50 is not active during this time. When the heating process is to be ended, the ring 48 is unlocked by turning it in the opposite direction and pushed forward. The valve 12 closes. Preferably, a spring not shown in Figure 1 presses the ring 48 forwards. The mechanical components for the activation of

the valve 42 and of the igniter 50 are not shown in Figure 1, for clarity's sake.

If a user wants to use the inhalation device 10, he first pushes a fresh substrate portion 1, e.g. a special slim cigarette with a diameter of 5 mm and a length of 40 mm, through the feed opening 24 until the rear zone of the substrate portion 1 comes to rest in the area of the heating surface 30. When he wants to inhale the first draw, he pulls the ring 48 onto the mouthpiece 18 and locks it by turning it. As already explained, fuel thereby flows to the heating surface 30 and is ignited. Through the heat emitted upon catalytic combustion, the zone of the substrate portion 1 is heated in the area of the heating surface 30, so that the aerosol-forming material 2 releases taste aerosol. When the user draws on the mouthpiece 18, air passes through the air inlet 4 into the substrate portion 1 and conveys the taste aerosol to the user through the aerosol outlet 5 of the substrate portion 1 via the flow channel 34. Additional air, which acts as a diluent, preferably joins via the air inlets 36. In the embodiment, the inhaled aerosol also contains carbon dioxide and water vapour from the catalytic combustion of the fuel. If the housing 12 has a window (not shown in Figure 1) which allows the user to view the heating surface 30, he sees that the heating surface 30 glows red upon ignition, and its colour then changes to light red when he draws on the mouthpiece 18.

Before he takes the next draw, the user pushes the substrate portion 1 slightly towards the mouthpiece 18. The rear, smoked zone of the substrate portion 1 enters the rear cavity 32, whilst a fresh zone reaches the region of the heating surface 30. Thus, upon the next

draw, fresh taste aerosol flows to the user. To save fuel and avoid side-stream smoke, the user can unlock the ring 48 after every draw by counter-turning it and pushing it forward so that the valve 42 shuts. The last draw is taken when the substrate portion 1 lies against the insulating ring 22. The user can then pull the substrate portion 1 through the feed opening 24 out of the housing 12 and dispose of it.

With the described version of the inhalation device 10, the user ensures, by drawing on the mouthpiece 18, the required flow of ambient air through the air inlets 36 to the heating surface 30 (catalytic combustion) as well as through the air inlet 4 into the substrate portion 1 and through the substrate portion 1. The combustion gases produced during the catalytic combustion are sucked into the flow channel 34 and join the inhaled aerosol as previously mentioned. As the catalytic combustion takes place almost completely, the amount of carbon monoxide and other undesired substances resulting from the combustion in the inhaled aerosol is low, so that this type of gas and aerosol transmission is acceptable.

However, it is also possible to keep the combustion gases away from the inhaled aerosol. For this, a sleeve open at both ends and made of metal with good heat-conducting properties, and which connects the guide sleeve 28 to the rear cavity 32, can for example be provided inside the heating surface 30, so that the combustion gases have no access to the flow channel 34. Preferably, this sleeve lies in heat-conducting contact against an inserted substrate portion 1. In the case of this version, the walls of the housing 12 must have at least one outlet for the combustion gases. The desired flow from the air

inlets 36 via the heating surface 30 to this outlet can be achieved by a temperature gradient (warm-air current).

This Sheet Has Been Replaced

Claims

1. System for supplying an inhalable aerosol, with
   - an inhalation device (10) which has a rod-like housing (12) with a rear mouth-side region (16) and a front region (14), a substrate holder (26), which can be heated by a heating apparatus (30, 38, 44, 50) and which is accessible via a feed opening (24) preferably located on the front side (23) of the housing (12), being arranged in the front region (14) of the housing (12), a flow channel (34) leading from the substrate holder (26) to the rear end of the housing (12), and the heating apparatus (30, 38, 44, 50) being set up to produce heat by thermal or catalytic combustion, and
   - a substrate portion (1) which is set up to be inserted into the substrate holder (26) through the feed opening (24) and which contains aerosol-forming material (2) inside an envelope (3) which has an air inlet (4) and an aerosol outlet (5).

2. System according to claim 1, characterized in that a filter can be inserted into the flow channel (34) of the inhalation device (10).

3. System according to claim 2, characterized in that a filter constructed as a filter mouthpiece can be inserted into the flow channel (34) in the rear region (16) of the housing (12) of the inhalation device (10).

4. System according to claim 1 or 2, characterized in that the inhalation device (10) has in the rear region (16) of the housing (12), a mouthpiece (18)

* C L M S *

THIS SHEET HAS BEEN REPLACED

* C L M S *

which is connected to the flow channel (34) and preferably has poor heat-conducting properties.

5. System according to one of claims 1 to 4, characterized in that the substrate holder (26) of the inhalation device (10) has at least one heating surface (30) which is preferably in the form of a hollow cylinder or is groove-shaped.

6. System according to one of claims 1 to 5, characterized in that the substrate holder (26) of the inhalation device (10) has two heating surfaces arranged parallel to each other, the reciprocal distance between which is preferably adjustable.

7. System according to claim 5 or 6, characterized in that the substrate holder (26) of the inhalation device (10) has, within the heating surfaces (30), a casing with good heat-conducting properties, which is preferably provided with bores, and which is set up to lie against a substrate portion (1) inserted into the substrate holder (26).

8. System according to one of claims 5 to 7, characterized in that the substrate holder (26) of the inhalation device (10) has, behind the heating surfaces (30), a rear cavity (32) into which the rear region of an inserted substrate portion (1) can be pushed.

9. System according to one of claims 5 to 8, characterized in that the heating surfaces (30) of the inhalation device (10) are set up to be heated

This Sheet Has Been Replaced



THIS SHEET HAS BEEN REPLACED

* C L M S *

through catalytic combustion of a gaseous and/or liquid fuel.

10. System according to one of claims 1 to 9, characterized in that a fuel reservoir (38), which is preferably refillable from outside, is arranged in the rear region (16) of the housing (12) of the inhalation device (10).

11. System according to claim 10, characterized in that the fuel contains one or more substances chosen from the following group: n-alkanes with one to four carbon atoms, n-alkanes with five to twenty carbon atoms, branched or ring-shaped alkanes with four to twenty carbon atoms, alcohols, ketones, esters, aldehydes.

12. System according to claim 10 or 11, characterized in that the inhalation device (10) has a switching apparatus (48) which is operatively connected to a, preferably piezoelectrically operating, ignition apparatus (50) set up to ignite the fuel and to a valve apparatus (42) set up to release fuel out of the fuel reservoir (38).

13. System according to claim 12, characterized in that the switching apparatus (48) has a ring (48), which is axially movable on the front region (14) of the housing (12) of the inhalation device (10), which preferably has poor heat-conducting properties, and which can preferably be fixed in two positions.

14. System according to one of claims 1 to 13, characterized in that the front region (14) of the

This Sheet Has Been Replaced



THIS SHEET HAS BEEN REPLACED

housing (12) of the inhalation device (10) has air inlets (36).

15. System according to one of claims 1 to 14, characterized in that the housing (12) of the inhalation device (10) has a window in front of a component (30) which lights up upon operation of the heating apparatus (30, 38, 44, 50).

16. System according to one of claims 1 to 15, characterized in that the housing (12) of the inhalation device (10) is in one piece.

17. System according to one of claims 1 to 15, characterized in that the housing (12) of the inhalation device (10) is in several parts, preferably in two parts, and has a detachable connection (20).

18. System according to one of claims 1 to 17, characterized in that the housing (12) of the inhalation device (10) has one or more of the materials chosen from the following group: duroplastics, multi-component plastics, hardwoods, high-grade woods, root timber, metal.

19. System according to one of claims 1 to 18, characterized in that the substrate portion (1) has a cylindrical shape with a length of 10 mm to 100 mm, preferably 15 mm to 60 mm, and a diameter of 4 mm to 12 mm, preferably 5 to 8 mm, the sleeve (3) being arranged as a cylindrical casing and the fronts of the cylinder being set up as air inlet (4) and aerosol outlet (5).

This Sheet Has Been Replaced

THIS SHEET HAS BEEN REPLACED

* C L M S *

20. System according to one of claims 1 to 19, characterized in that the sleeve (3) of the substrate portion (1) contains low-porous or virtually air-impermeable cigarette paper which preferably has a high proportion of mineral additives.

21. System according to one of claims 1 to 20, characterized in that the envelope (3) of the substrate portion (1) contains a metal foil, preferably an aluminium foil.

22. System according to one of claims 1 to 21, characterized in that the substrate portion (1) has, in its front region, an insulating casing, which preferably projects over the front end of the envelope (3).

23. System according to one of claims 1 to 22, characterized in that the aerosol-forming material (2) of the substrate portion (1) contains a carrier material, preferably aluminium oxide, silica gel, charcoal, cellulose fibres, lignin granules, zeolites, aluminae or meerschaum or combinations thereof, as well as a polyol or several polyols, preferably glycerine and/or propylene glycol, and preferably in addition binding agents, gelation agents, additives, aromas and/or nicotine, the proportion of polyols being 10 wt.-% to 60 wt.-%.

24. System according to one of claims 1 to 22, characterized in that the aerosol-forming material (2) of the substrate portion (1) contains a tobacco

This Sheet Has Been Replaced

THIS SHEET HAS BEEN REPLACED

* C L M S *

material, preferably cut tobacco, leaf-tobacco cut and/or tobacco rib cut, as well as a polyol or several polyols, preferably glycerine and/or propylene glycol, which are preferably thickened with tobacco dust, and preferably in addition binding agents, gelation agents, additives, aromas and/or nicotine, the proportion of polyols being 10 wt.-% to 40 wt.-%.

25. System according to one of claims 1 to 22, characterized in that the substrate portion (1) is a thin, filterless cigarette customary in the trade per se which contains polyols in a proportion of 5 wt.-% to 10 wt.-%.

26. Inhalation device which has a rod-like housing (12) with a rear mouth-side region (16) and a front region (14), a substrate holder (26), which is heatable by a heating apparatus (30, 38, 44, 50) and which is accessible via a feed opening (24) preferably located on the front side (23) of the housing (12), being arranged in the front region (14) of the housing (12), a flow channel (34) leading from the substrate holder (26) to the rear end of the housing (12) and the heating apparatus (30, 38, 44, 50) being set up to produce heat by thermal or catalytic combustion.

27. Inhalation device according to claim 26, characterized by features of the inhalation device (10) from one of claims 2 to 18.

28. Substrate portion which is set up to be inserted into the substrate holder (26) of an inhalation

This Sheet Has Been Replaced



THIS SHEET HAS BEEN REPLACED

device (10) according to claim 26 or 27 through the feed opening (24) and which contains aerosol-forming material inside an envelope (3) which has an air inlet (4) and an aerosol outlet (5).

29. Substrate portion according to claim 28, characterized by features of the substrate portion (1) from one of claims 19 to 25.

This Sheet Has Been Replaced

* C L M S *

THIS SHEET HAS BEEN REPLACED

Abstract

A system for supplying an inhalable aerosol contains an inhalation device (10) which contains a rod-shaped housing (12) with a rear mouth-side region (16) and a front region (14). A substrate holder (26) which is heatable by a heating apparatus (30, 38, 44, 50) and which is accessible via a feed opening (24) preferably located on the front side (23) of the housing (12) is arranged in the front region (14) of the housing (12). A flow channel (34) leads from the substrate holder (26) to the rear end of the housing (12). The heating apparatus (30, 38, 44, 50) is set up to produce heat by thermal or catalytic combustion. A substrate portion (1) which is set up to be inserted into the substrate holder (26) through the feed opening (24) contains aerosol-forming material inside an envelope which has an air inlet and an aerosol outlet.

(Figure 1)

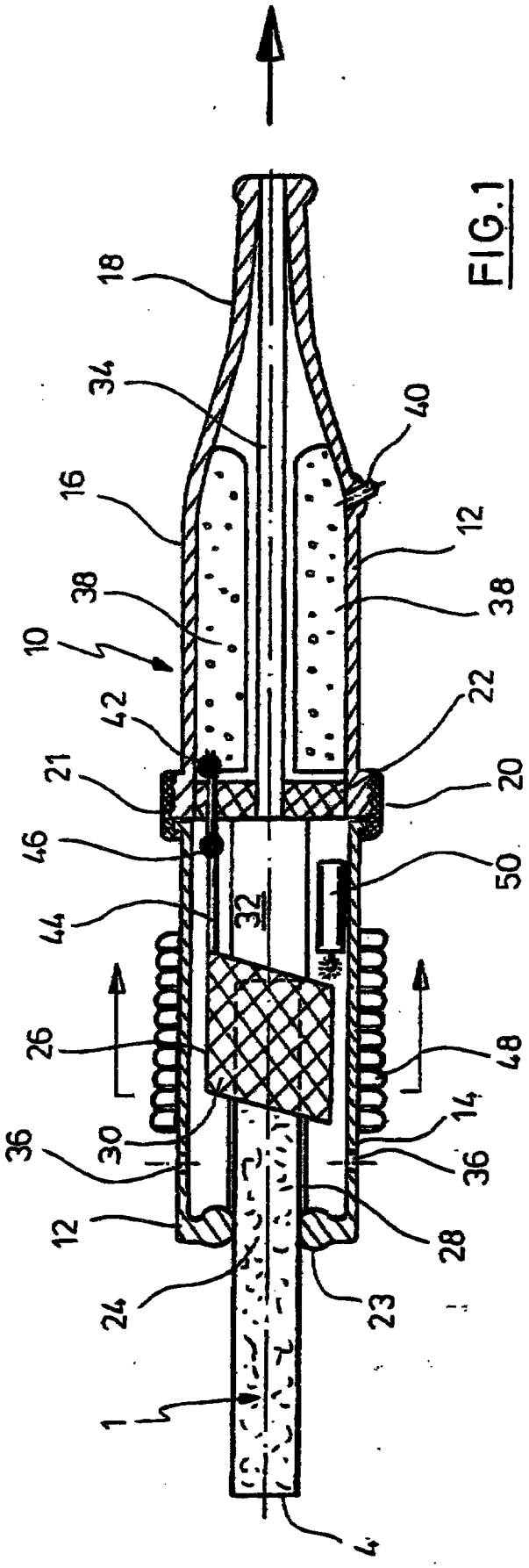
18
34
40
16
12
38
38
10
42
22
21
20
46
50
44
32
26
48
36
30
14
36
12
28
24
23
1
4

FIG.1

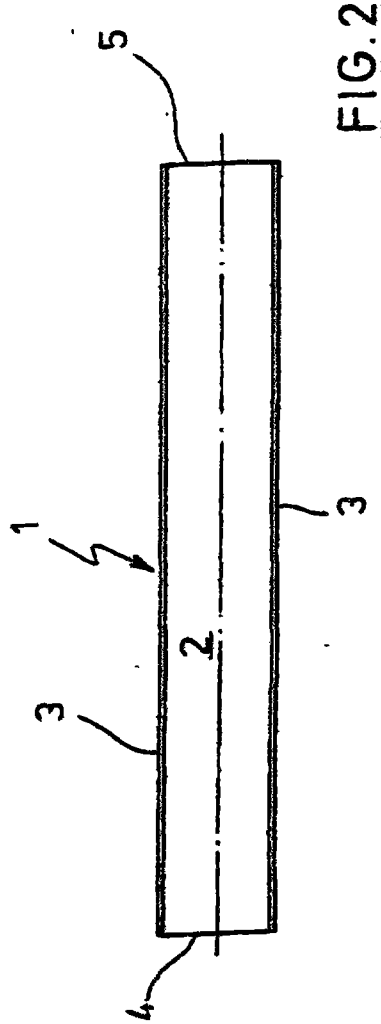
5
1
3
2
3
4

FIG.2

Amended Claims

1. System for supplying an inhalable aerosol, with
- an inhalation device (10) which has a rod-like housing (12) with a rear mouth-side region (16) and a front region (14), a substrate holder (26), which can be heated by a heating apparatus (30, 38, 44, 50) and which is accessible via a feed opening (24) preferably located on the front side (23) of the housing (12), being arranged in the front region (14) of the housing (12), a flow channel (34) leading from the substrate holder (26) to the rear end of the housing (12), the heating apparatus (30, 38, 44, 50) being set up to produce heat by thermal or catalytic combustion, a fuel reservoir (38), which is preferably refillable from outside, being arranged in the rear region (16) of the housing (12) of the inhalation device (10), and the inhalation device (10) having a switching apparatus (48) which is operatively connected to a, preferably piezoelectrically operating, ignition apparatus (50) set up to ignite the fuel and to a valve apparatus (42) set up to release fuel from the fuel reservoir (38), and
- a substrate portion (1) which is set up to be inserted into the substrate holder (26) through the feed opening (24) and which contains an aerosol-forming material (2) inside an envelope (3) which has an air inlet (4) and an aerosol outlet (5),
- characterized in that the switching apparatus (48) has a ring (48), which is axially movable on the front region (14) of the housing (12) of the inhalation device (10), and which preferably has

poor heat-conducting properties, and which can preferably be fixed in two positions.

2. System according to claim 1, characterized in that a filter can be inserted into the flow channel (34) of the inhalation device (10).

3. System according to claim 2, characterized in that a filter constructed as a filter mouthpiece can be inserted into the flow channel (34) in the rear region (16) of the housing (12) of the inhalation device (10).

4. System according to claim 1 or 2, characterized in that the inhalation device (10) has, in the rear region (16) of the housing (12), a mouthpiece (18) which is connected to the flow channel (34) and preferably has poor heat-conducting properties.

5. System according to one of claims 1 to 4, characterized in that the substrate holder (26) of the inhalation device (10) has at least one heating surface (30) which is preferably a hollow cylinder or is groove-like.

6. System according to one of claims 1 to 5, characterized in that the substrate holder (26) of the inhalation device (10) has two heating surfaces arranged parallel to each other, the reciprocal distance between which is preferably adjustable.

7. System according to claim 5 or 6, characterized in that the substrate holder (26) of the inhalation device (10) has, within the heating surfaces (30), a

casing with good heat-conducting properties, which is preferably provided with bores and which is set up to lie against a substrate portion (1) inserted into the substrate holder (26).

8. System according to one of claims 5 to 7, characterized in that the substrate holder (26) of the inhalation device (10) has, behind the heating surfaces (30), a rear cavity (32) into which the rear region of an inserted substrate portion (1) can be pushed.

9. System according to one of claims 5 to 8, characterized in that the heating surfaces (30) of the inhalation device (10) are set up to be heated through catalytic combustion of a gaseous and/or liquid fuel.

10. System according to one of claims 1 to 9, characterized in that the fuel contains one or more substances chosen from the following group: n-alkanes with one to four carbon atoms, n-alkanes with five to twenty carbon atoms, branched or ring-shaped alkanes with four to twenty carbon atoms, alcohols, ketones, esters, aldehydes.

11. System according to one of claims 1 to 10, characterized in that the front region (14) of the housing (12) of the inhalation device (10) has air inlets (36).

12. System according to one of claims 1 to 11, characterized in that the housing (12) of the inhalation device (10) has a window in front of a

component (30) which lights up upon operation of the heating apparatus (30, 38, 44, 50).

13. System according to one of claims 1 to 12, characterized in that the housing (12) of the inhalation device (10) is in one piece.

14. System according to one of claims 1 to 12, characterized in that the housing (12) of the inhalation device (10) is in several parts, preferably in two parts, and has a detachable connection (20).

15. System according to one of claims 1 to 14, characterized in that the housing (12) of the inhalation device (10) has one or more of the materials chosen from the following group: duroplastics, multi-component plastics, hardwoods, high-grade woods, root timber, metal.

16. System according to one of claims 1 to 15, characterized in that the substrate portion (1) has a cylindrical shape with a length of 10 mm to 100 mm, preferably 15 mm to 60 mm, and a diameter of 4 mm to 12 mm, preferably 5 to 8 mm, the sleeve (3) being arranged as a cylindrical casing and the fronts of the cylinder being set up as air inlet (4) and aerosol outlet (5).

17. System according to one of claims 1 to 16, characterized in that the sleeve (3) of the substrate portion (1) contains low-porous or virtually air-impermeable cigarette paper which

preferably has a high proportion of mineral additives.

18. System according to one of claims 1 to 17, characterized in that the envelope (3) of the substrate portion (1) contains a metal foil, preferably an aluminium foil.

19. System according to one of claims 1 to 18, characterized in that the substrate portion (1) has, in its front region, an insulating casing, which preferably projects over the front end of the envelope (3).

20. System according to one of claims 1 to 19, characterized in that the aerosol-forming material (2) of the substrate portion (1) contains a carrier material, preferably aluminium oxide, silica gel, charcoal, cellulose fibres, lignin granules, zeolites, aluminae or meerschaum or combinations thereof, as well as a polyol or several polyols, preferably glycerine and/or propylene glycol, and preferably in addition binding agents, gelation agents, additives, aromas and/or nicotine, the proportion of polyols being 10 wt.-% to 60 wt.-%.

21. System according to one of claims 1 to 19, characterized in that the aerosol-forming material (2) of the substrate portion (1) contains a tobacco material, preferably cut tobacco, leaf-tobacco cut and/or tobacco rib cut, as well as a polyol or several polyols, preferably glycerine and/or propylene glycol, which are preferably thickened with tobacco dust, and preferably in addition

binding agents, gelation agents, additives, aromas and/or nicotine, the proportion of polyols being 10 wt.-% to 40 wt.-%.

22. System according to one of claims 1 to 19, characterized in that the substrate portion (1) is a thin, filterless cigarette customary in the trade per se which contains polyols in a proportion of 5 wt.-% to 10 wt.-%.

23. Inhalation device which has a rod-like housing (12) with a rear mouth-side region (16) and a front region (14), a substrate holder (26), which is heatable by a heating apparatus (30, 38, 44, 50) and which is accessible via a feed opening (24) preferably located on the front side (23) of the housing (12), being arranged in the front region (14) of the housing (12), a flow channel (34) leading from the substrate holder (26) to the rear end of the housing (12), the heating apparatus (30, 38, 44, 50) being set up to produce heat by thermal or catalytic combustion, a fuel reservoir (38), which is preferably refillable from outside, being arranged in the rear region (16) of the housing (12) of the inhalation device (10), and the inhalation device (10) having a switching apparatus (48) which is operatively connected to a, preferably piezoelectrically operating, ignition apparatus (50) set up to ignite the fuel and to a valve apparatus (42) set up to release fuel from the fuel reservoir (38), characterized in that the switching apparatus (48) has a ring (48) which is axially movable on the front region (14) of the housing (12) of the inhalation device (10) and which has preferably poor

heat-conducting properties and which can preferably be fixed in two positions.

24. Inhalation device according to claim 23, characterized by features of the inhalation device (10) from one of claims 2 to 15.

25. Substrate portion which is set up to be inserted into the substrate holder (26) of an inhalation device (10) according to claim 23 or 24 through the feed opening (24) and which contains aerosol-forming material inside an envelope (3) which has an air inlet (4) and an aerosol outlet (5).

26. Substrate portion according to claim 25, characterized by features of the substrate portion (1) from one of claims 16 to 22.

This Sheet Has Been Replaced





THIS SHEET HAS BEEN REPLACED

by the user and heated via the heat exchanger, to release aerosol. This system is also relatively heavy and unwieldy and must be opened to insert a new substrate portion.

The object of the invention is to create a light, manageable system which can be carried in the mouth by the user, which contains a re-usable inhalation device and in particular can serve as a smoking article which offers a similar taste impression to conventional cigarettes, but in which, during use, no side-stream smoke is produced between draws.

This object is achieved by a system with the features of claim 1 which has an inhalation device with the features of claim 23 and a substrate portion. Advantageous versions of the invention emerge from the dependent claims.

The system according to the invention for supplying an inhalable aerosol has an inhalation device which has a rod-like housing with a rear mouth-side region and a front region. Arranged in the front region of the housing is a substrate holder, heatable by a heating apparatus, which is accessible via a feed opening preferably located on the front side of the housing. A flow channel leads from the substrate holder to the rear end of the housing. The heating apparatus is set up to generate heat through thermal or catalytic combustion, a fuel reservoir preferably being arranged in the rear region of the housing. The system furthermore contains a substrate portion which is set up to be inserted into the substrate holder through the feed opening and which contains

REPLACEMENT SHEET
19 SEP 2001

heat-conducting properties and which can preferably be fixed in two positions.

24. Inhalation device according to claim 23, characterized by features of the inhalation device (10) from one of claims 2 to 15.

* C L M S *

REPLACEMENT SHEET
19 SEP 2001