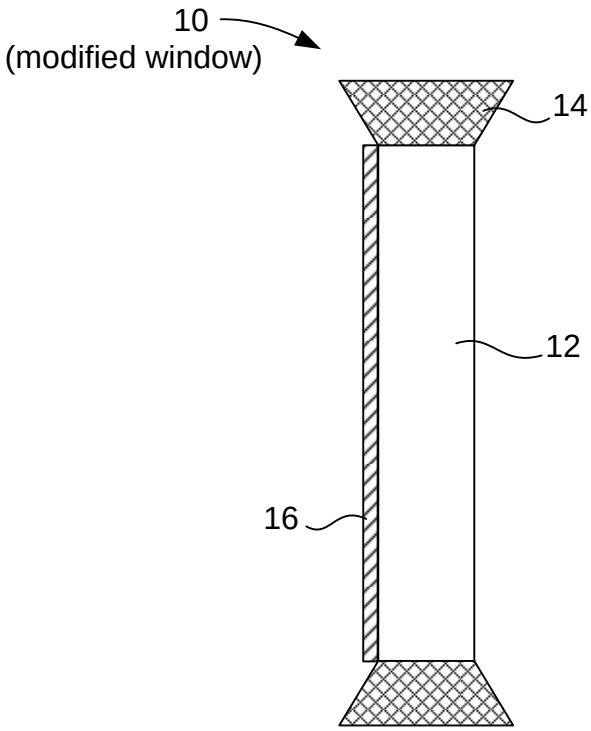

Figure 1
(Prior Art)

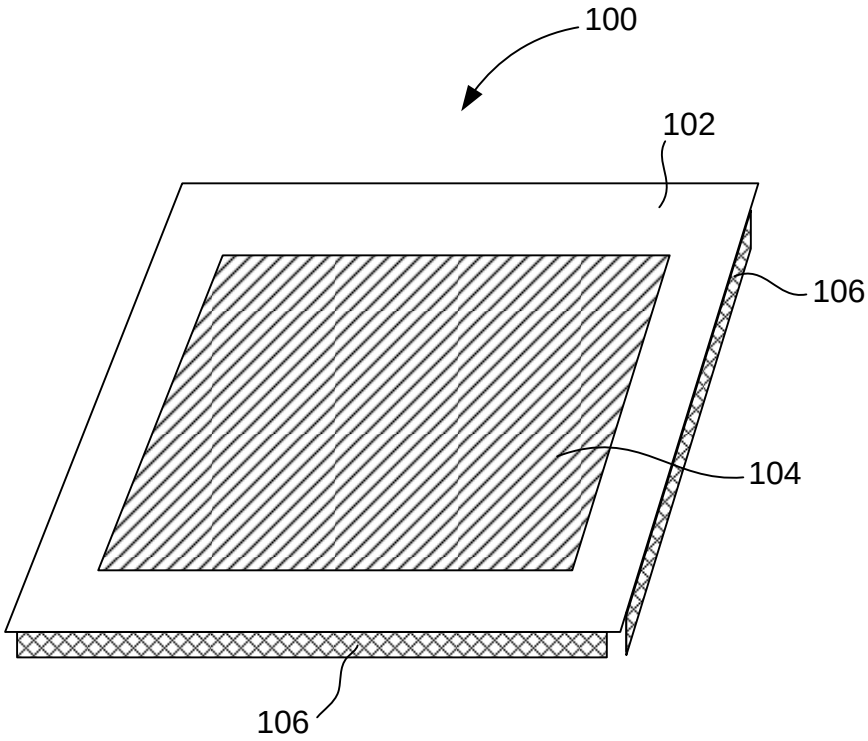

Figure 2A

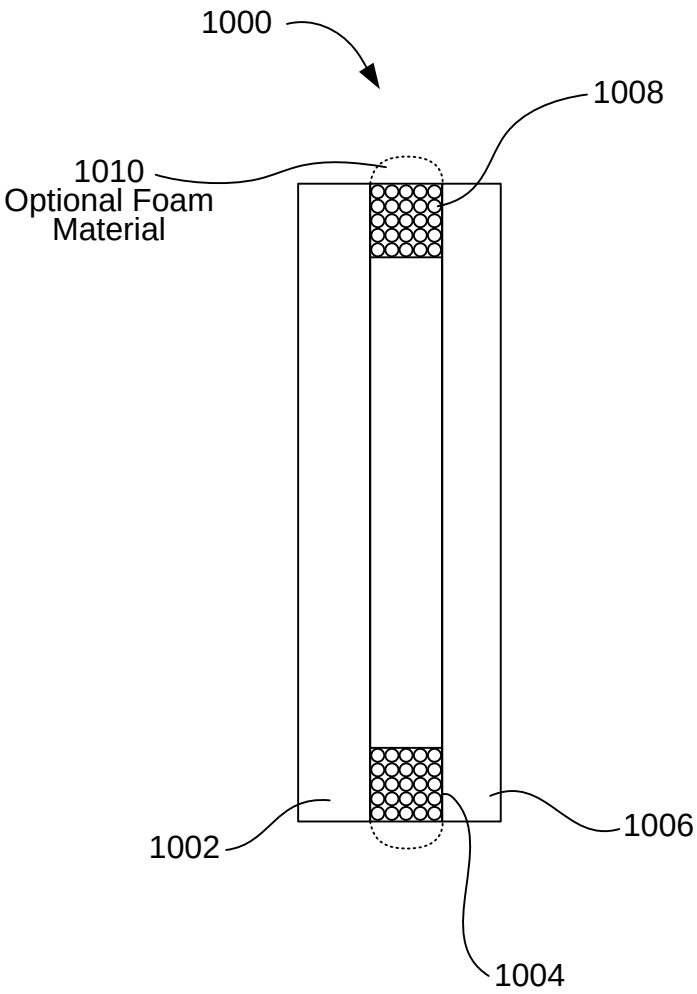

Figure 2B

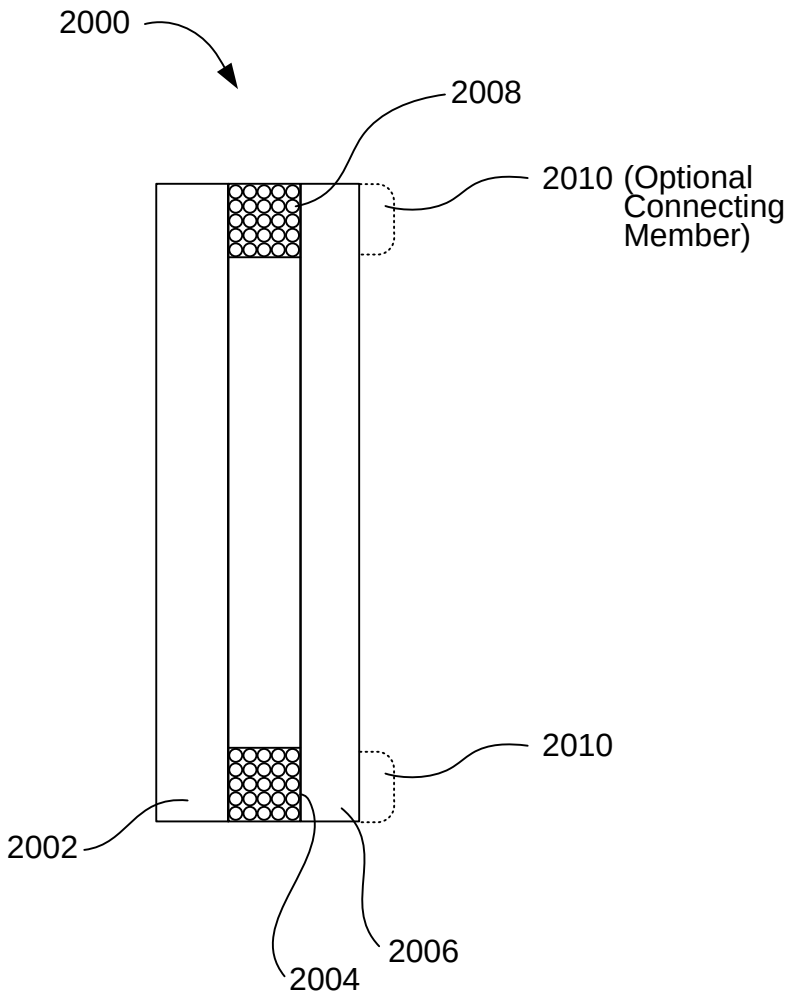
2000
2008
2010 (Optional Connecting Member)
2010
2002
2004
2006

Figure 2C

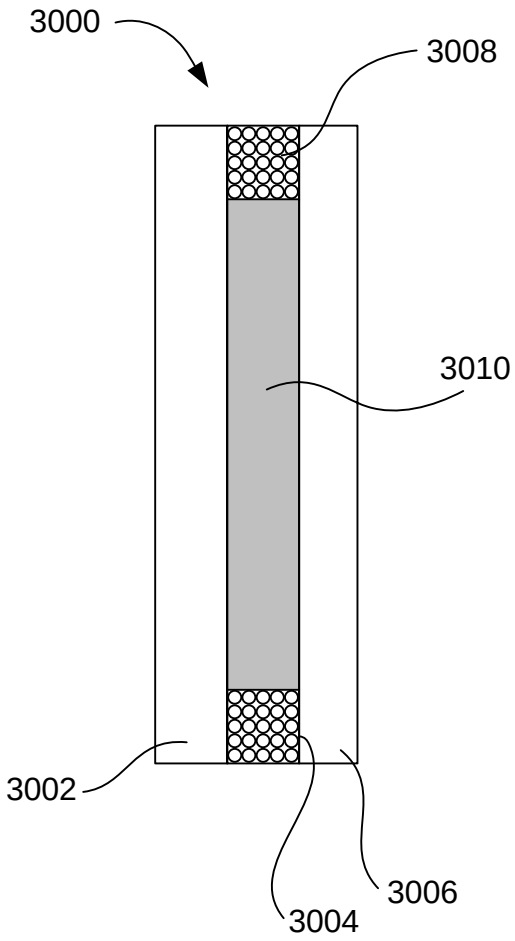

Figure 2D

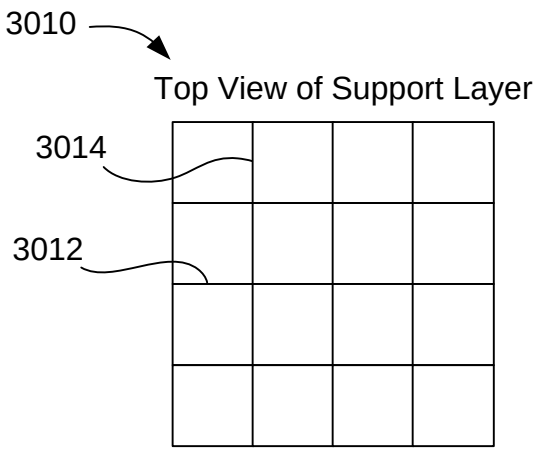

Figure 2E

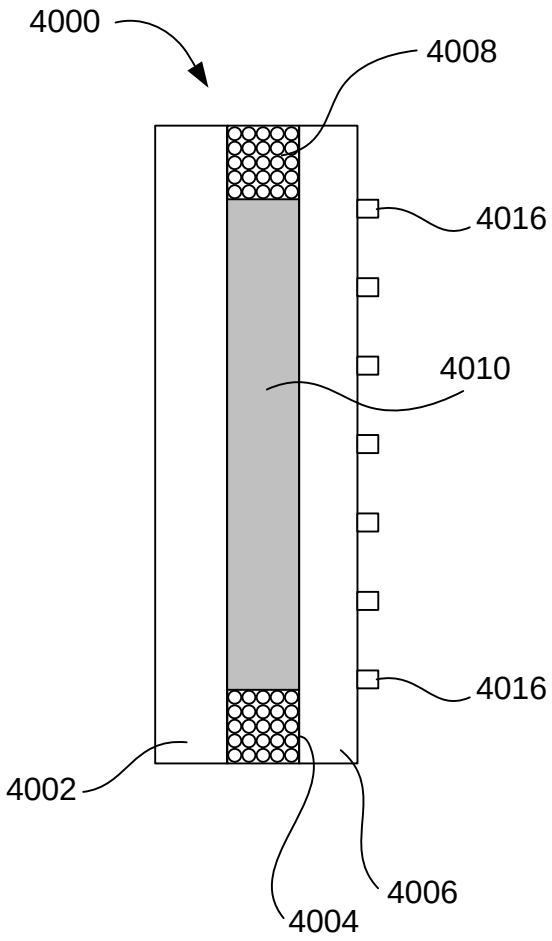

Figure 2F

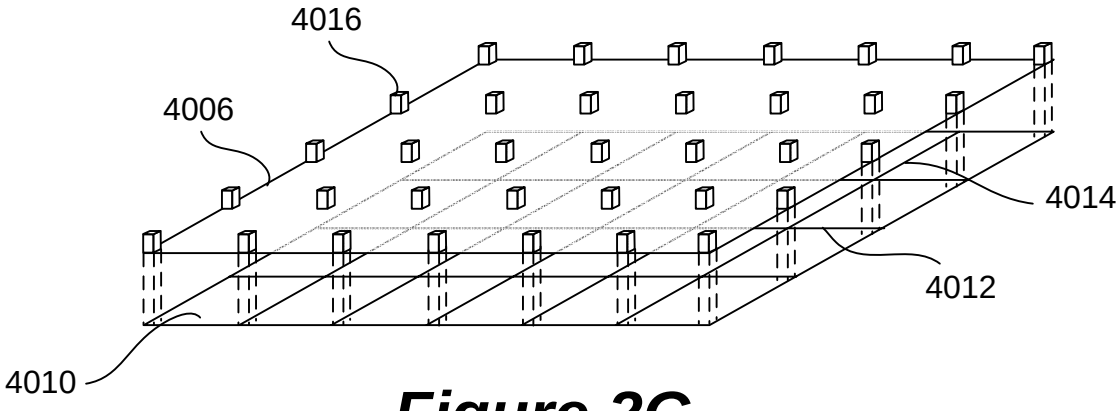

Figure 2G

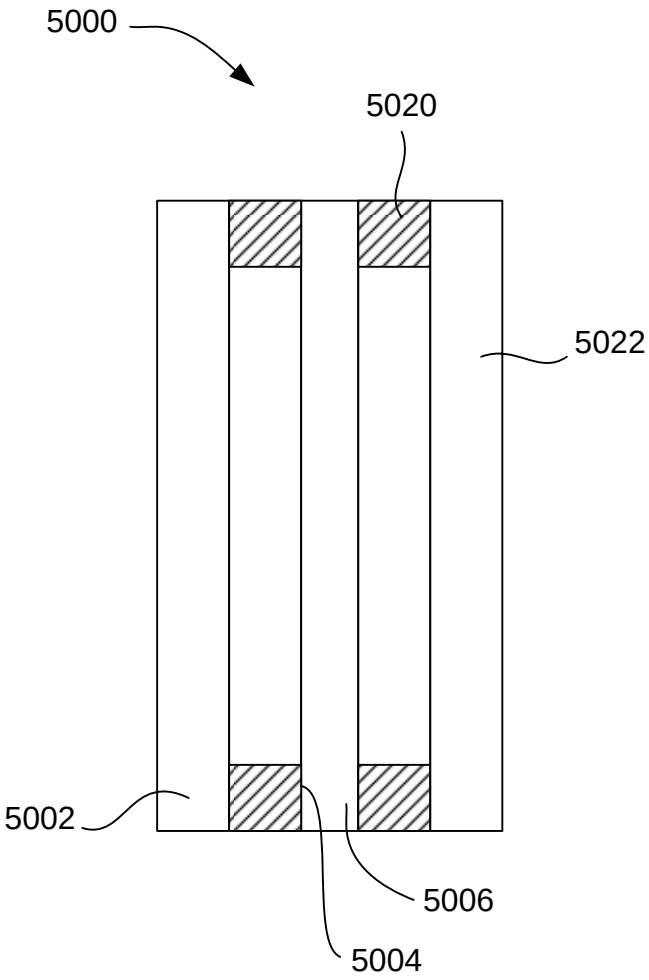

Figure 2H

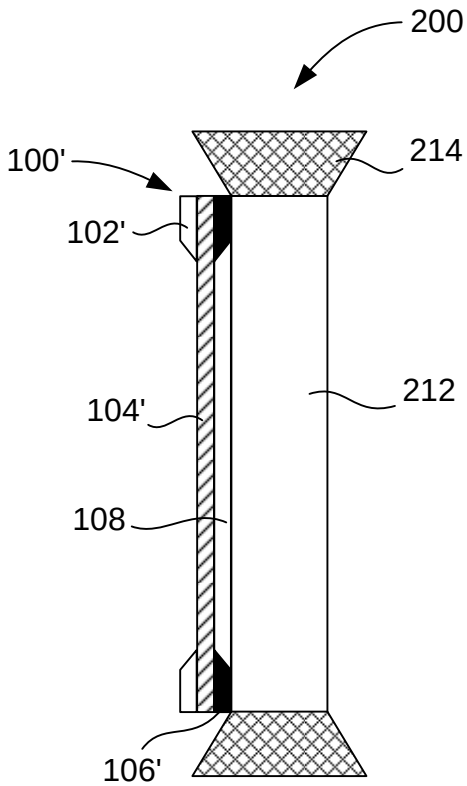

Figure 3

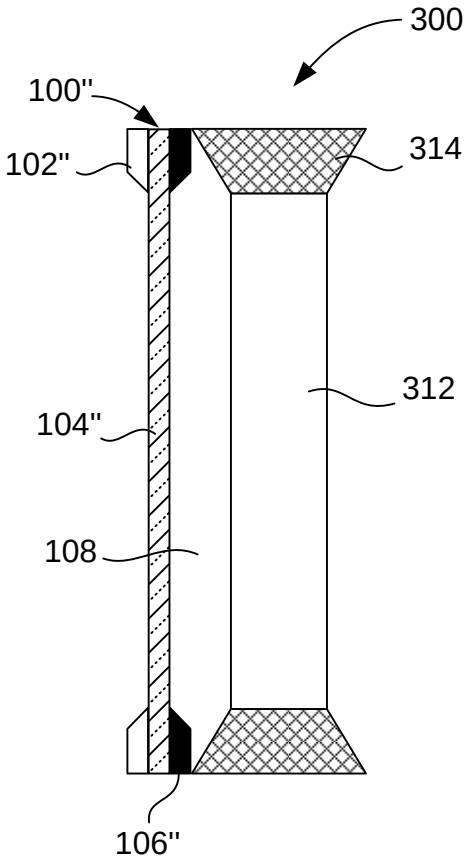

Figure 4A

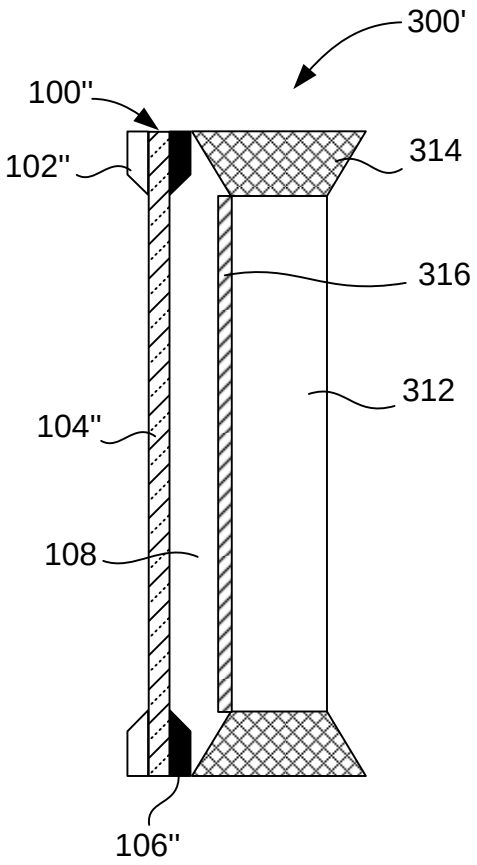

Figure 4B

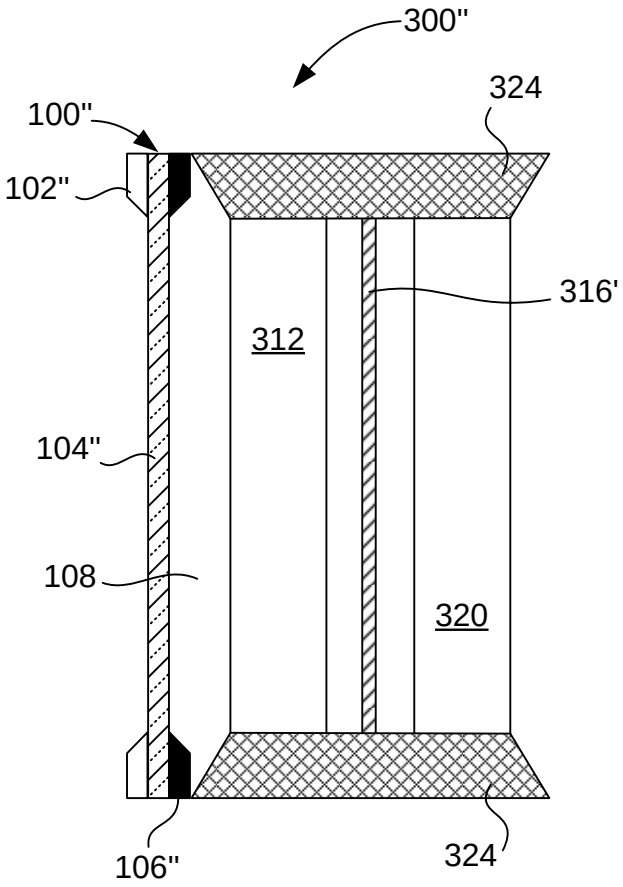

Figure 5A

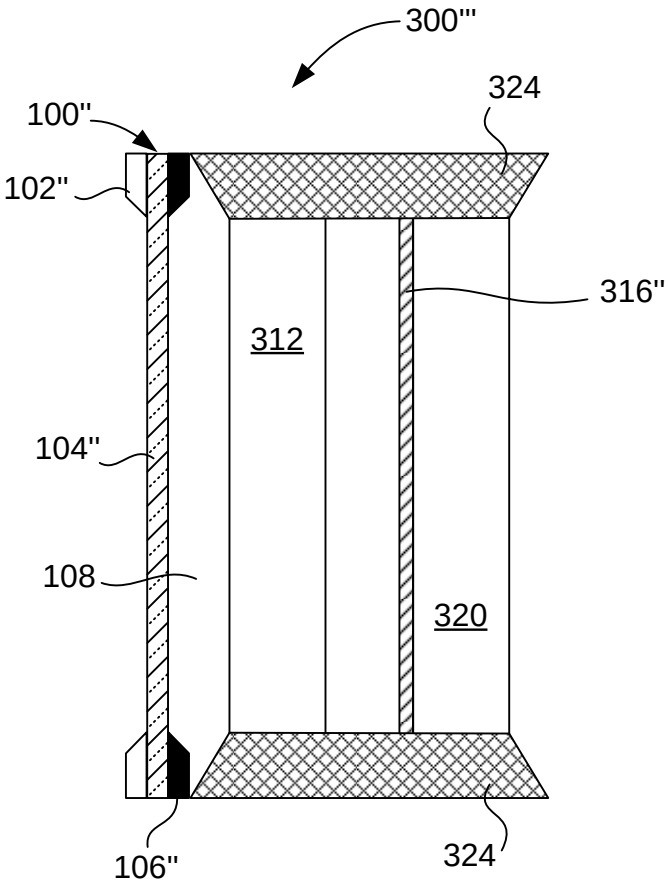

Figure 5B

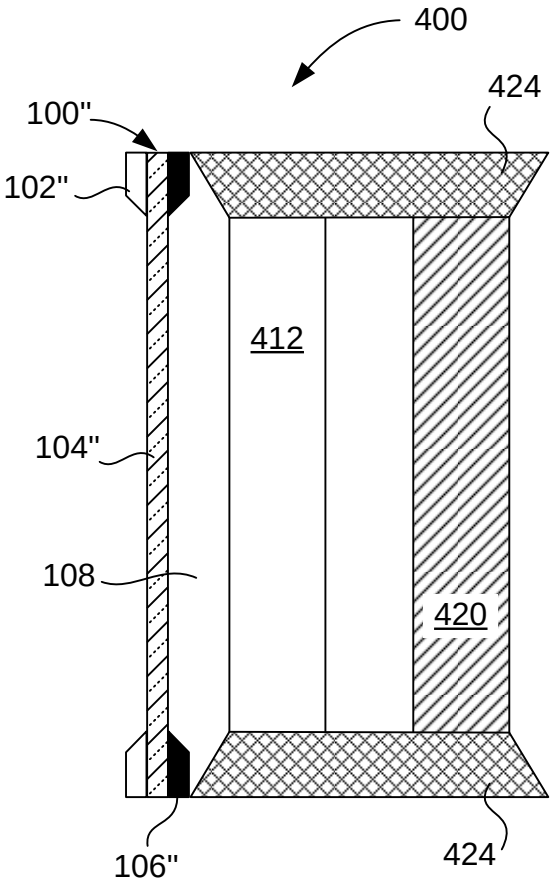

Figure 6A

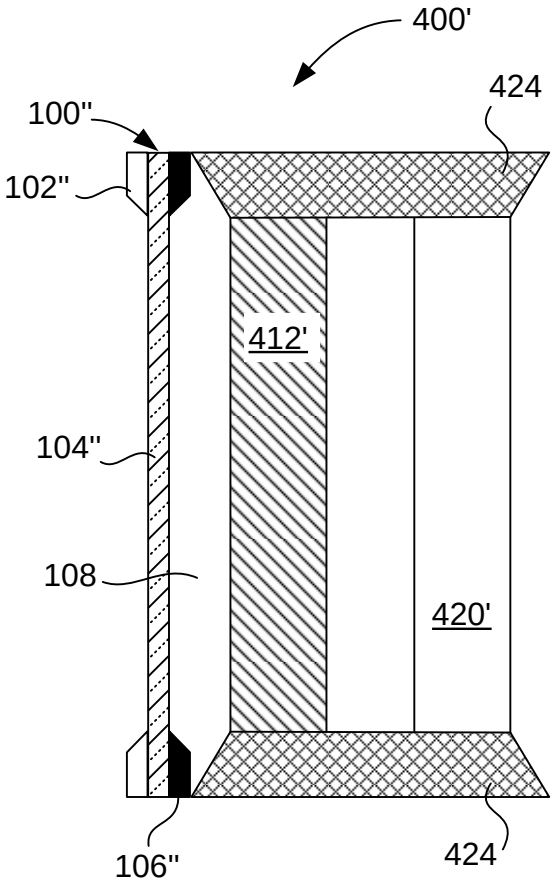

Figure 6B