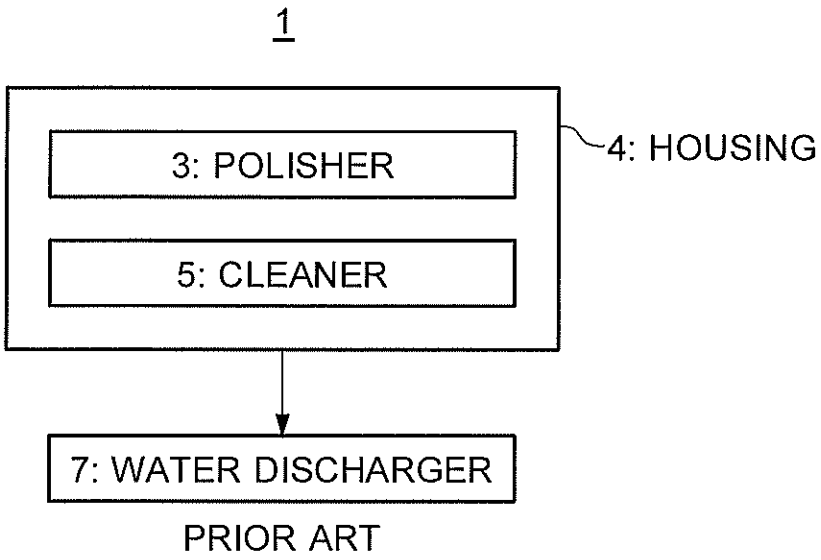
1
3: POLISHER
5: CLEANER
4: HOUSING
7: WATER DISCHARGER
PRIOR ART

FIG. 1

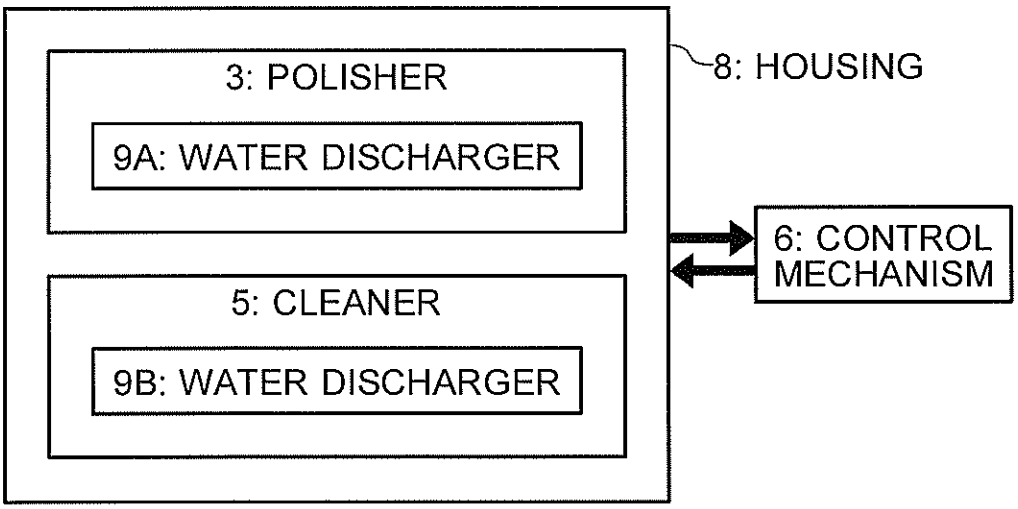
3: POLISHER
9A: WATER DISCHARGER
5: CLEANER
9B: WATER DISCHARGER
8: HOUSING
6: CONTROL MECHANISM
2

FIG. 2

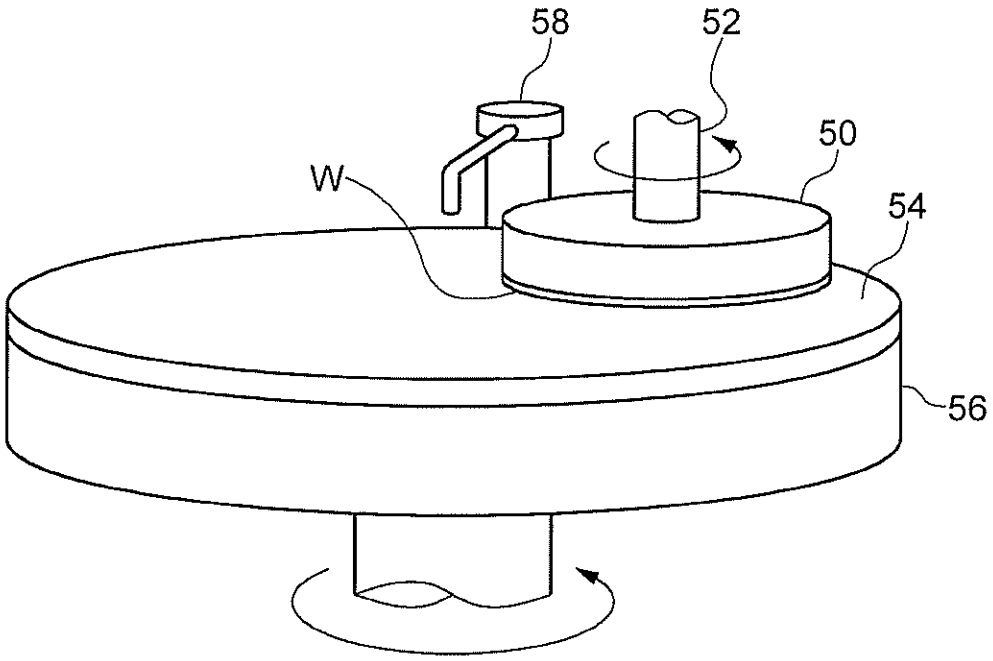

3

FIG. 3

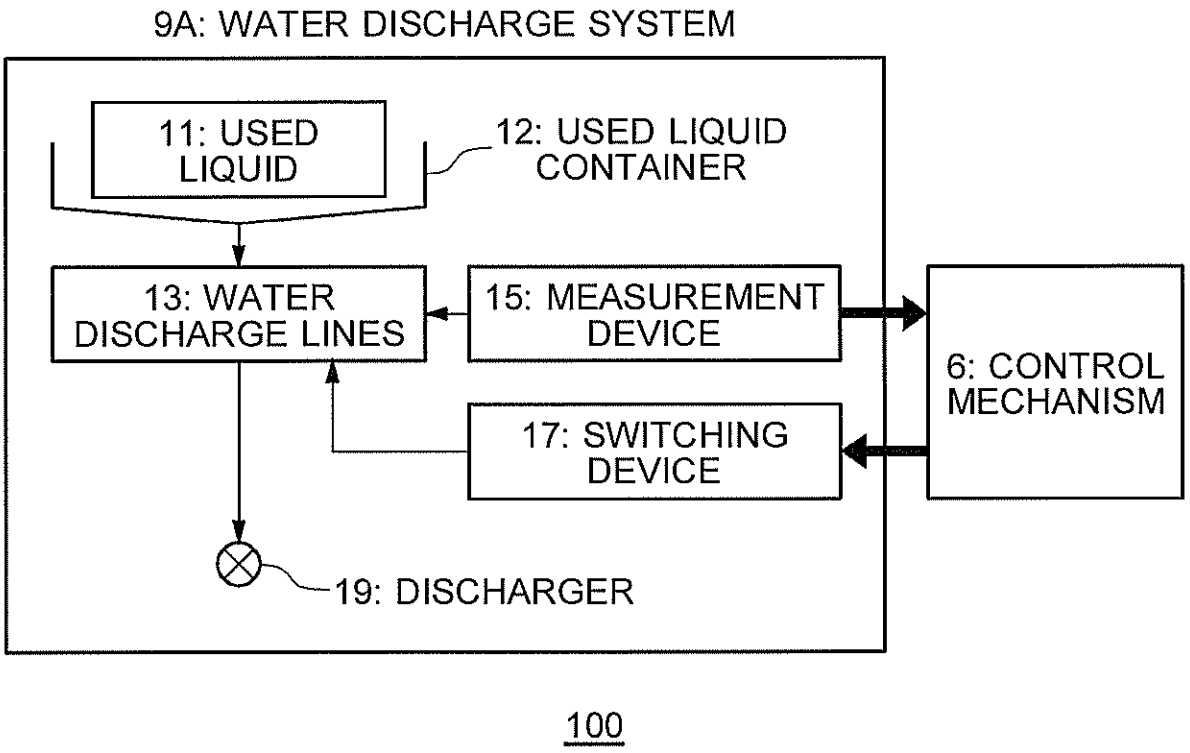
9A: WATER DISCHARGE SYSTEM
11: USED LIQUID
12: USED LIQUID CONTAINER
13: WATER DISCHARGE LINES
15: MEASUREMENT DEVICE
6: CONTROL MECHANISM
17: SWITCHING DEVICE
19: DISCHARGER
100

FIG. 4

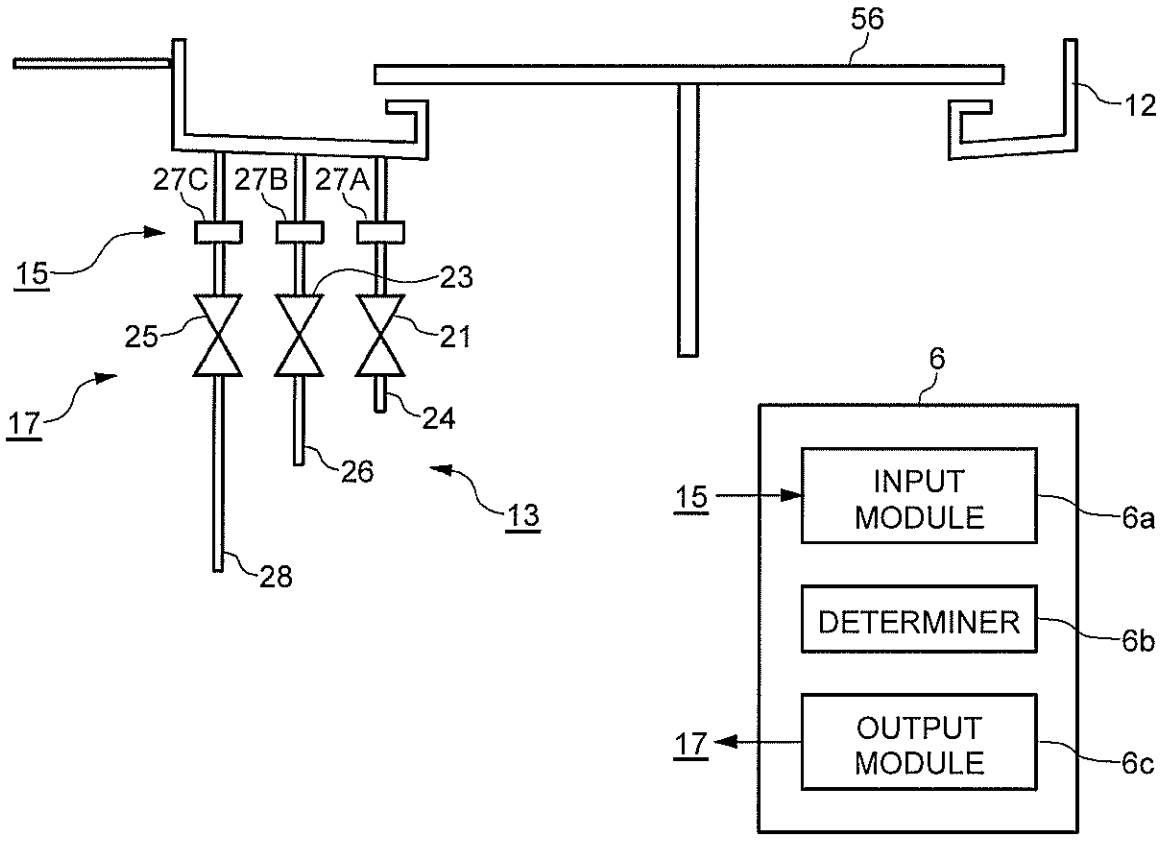
56
12
27C
27B
27A
15
23
25
21
17
24
26
13
28
6
15
INPUT MODULE
6a
DETERMINER
6b
17
OUTPUT MODULE
6c
100

FIG. 5

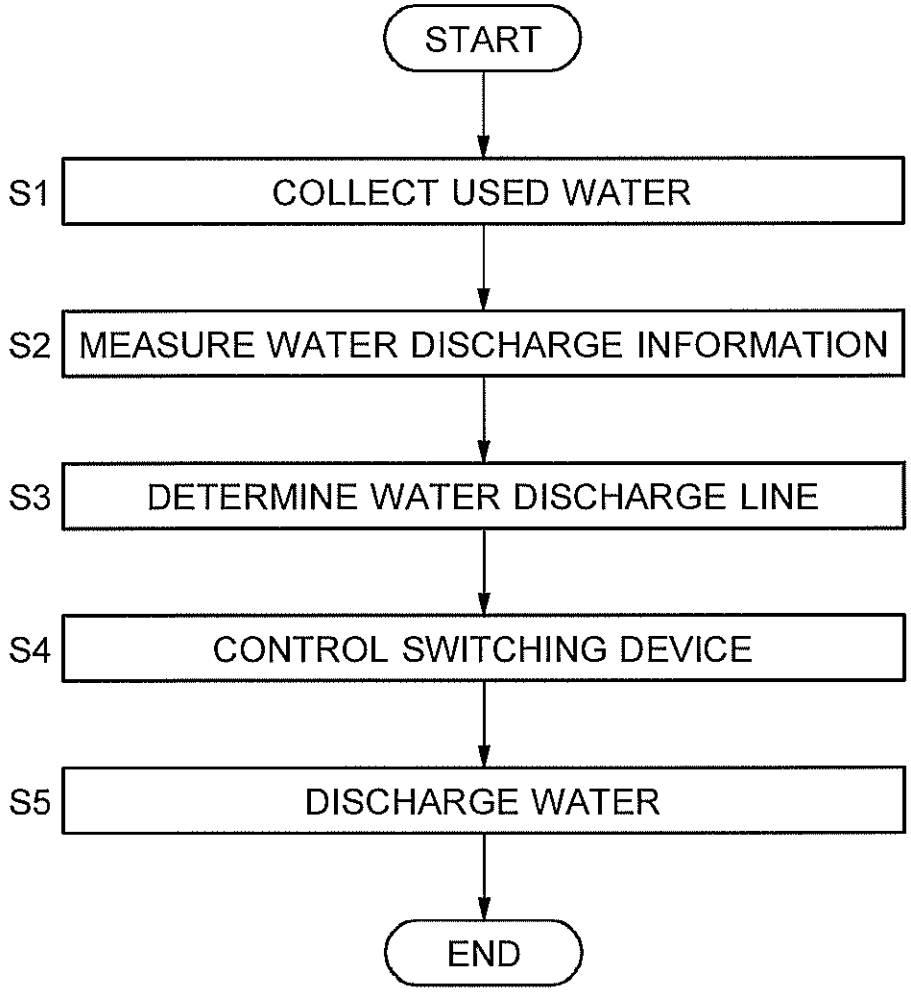
START
S1
COLLECT USED WATER
S2
MEASURE WATER DISCHARGE INFORMATION
S3
DETERMINE WATER DISCHARGE LINE
S4
CONTROL SWITCHING DEVICE
S5
DISCHARGE WATER
END

FIG. 6

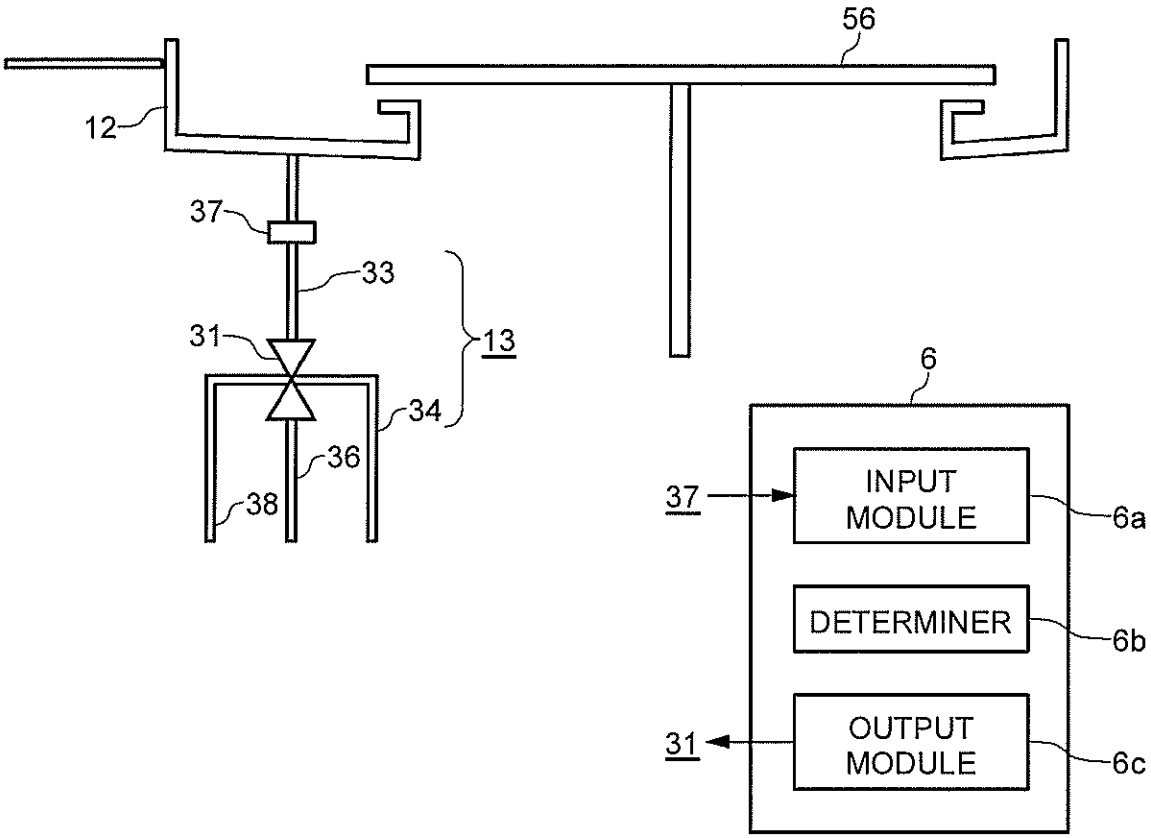
56
12
37
33
31
13
34
36
38
6
37
INPUT MODULE
6a
DETERMINER
6b
31
OUTPUT MODULE
6c
101

FIG. 7

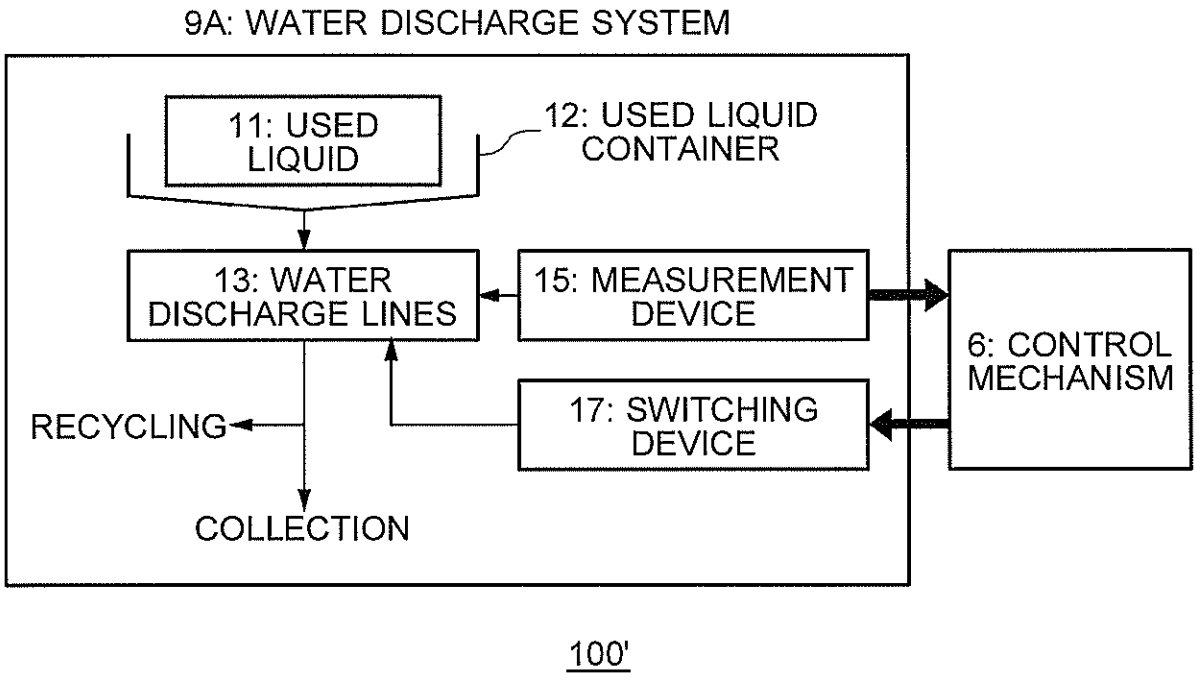
9A: WATER DISCHARGE SYSTEM
11: USED LIQUID
12: USED LIQUID CONTAINER
13: WATER DISCHARGE LINES
15: MEASUREMENT DEVICE
6: CONTROL MECHANISM
17: SWITCHING DEVICE
RECYCLING
COLLECTION
100'

FIG. 8

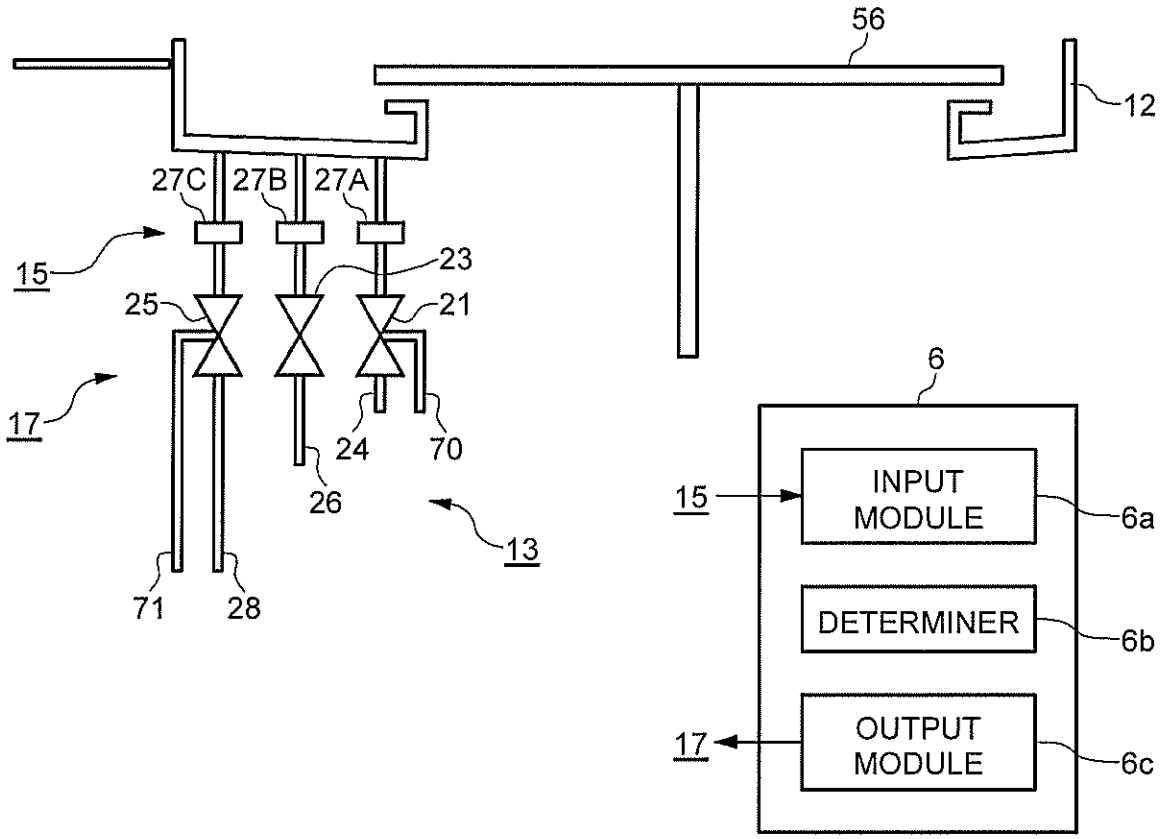
56
12
27C
27B
27A
15
23
25
21
17
24
70
26
13
71
28
6
15
INPUT MODULE
6a
DETERMINER
6b
17
OUTPUT MODULE
6c
100'

FIG. 9

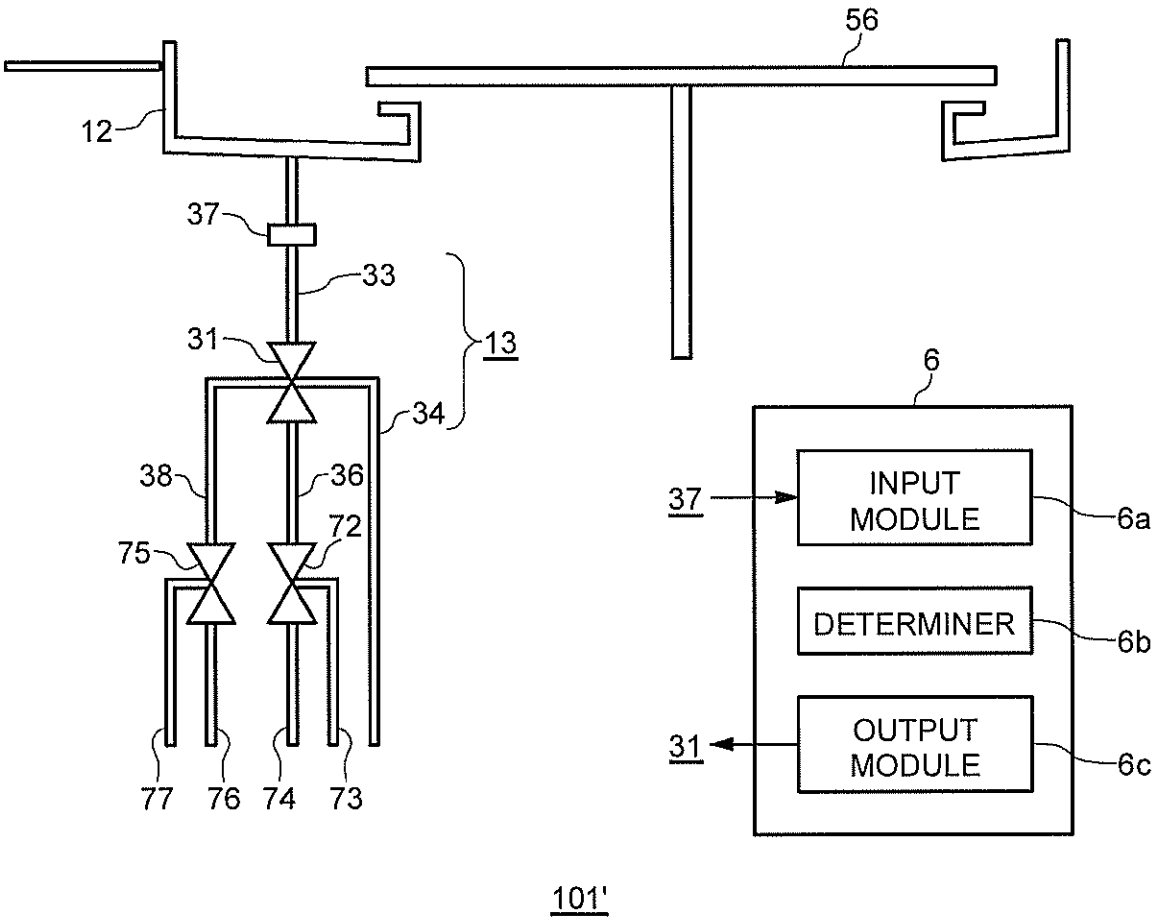
56
12
37
33
31
13
34
38
36
72
75
77
76
74
73
6
37
INPUT MODULE
6a
DETERMINER
6b
31
OUTPUT MODULE
6c
101'

FIG. 1 0

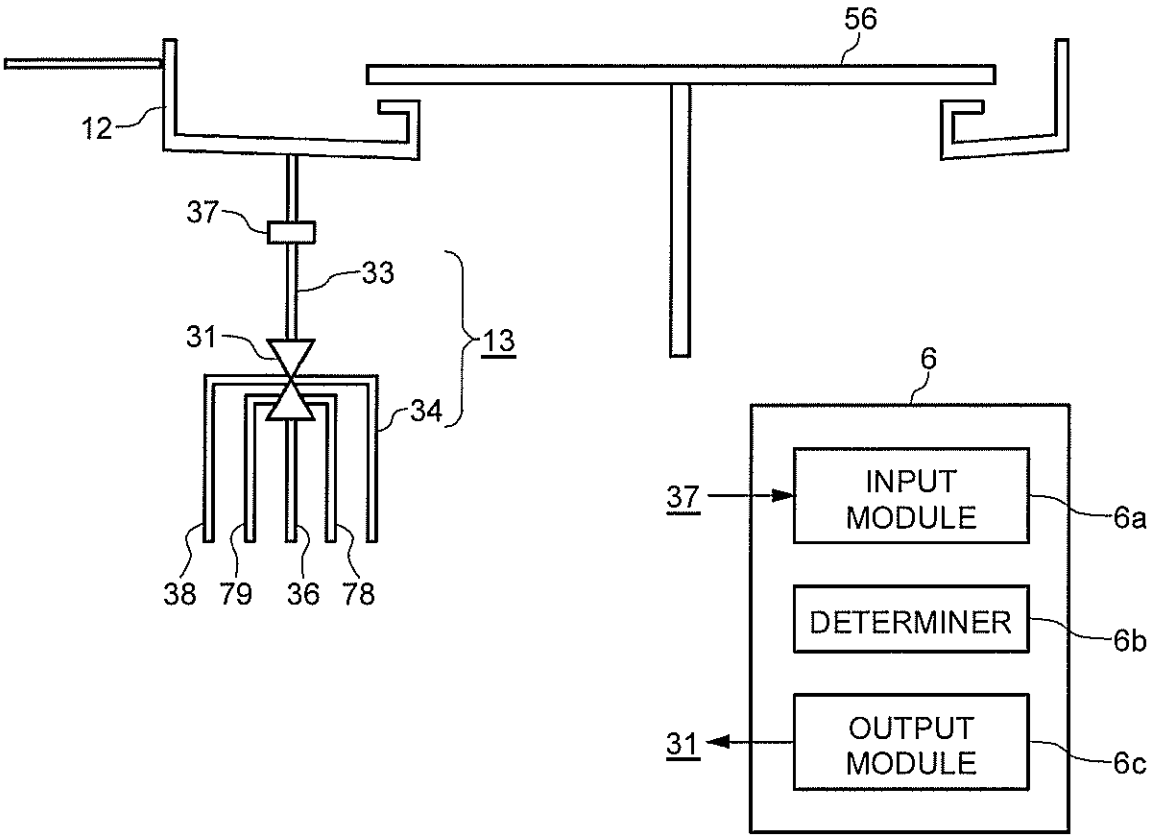
56
12
37
33
31
13
34
38
79
36
78
6
37
INPUT MODULE
6a
DETERMINER
6b
31
OUTPUT MODULE
6c
101"

FIG. 1 1

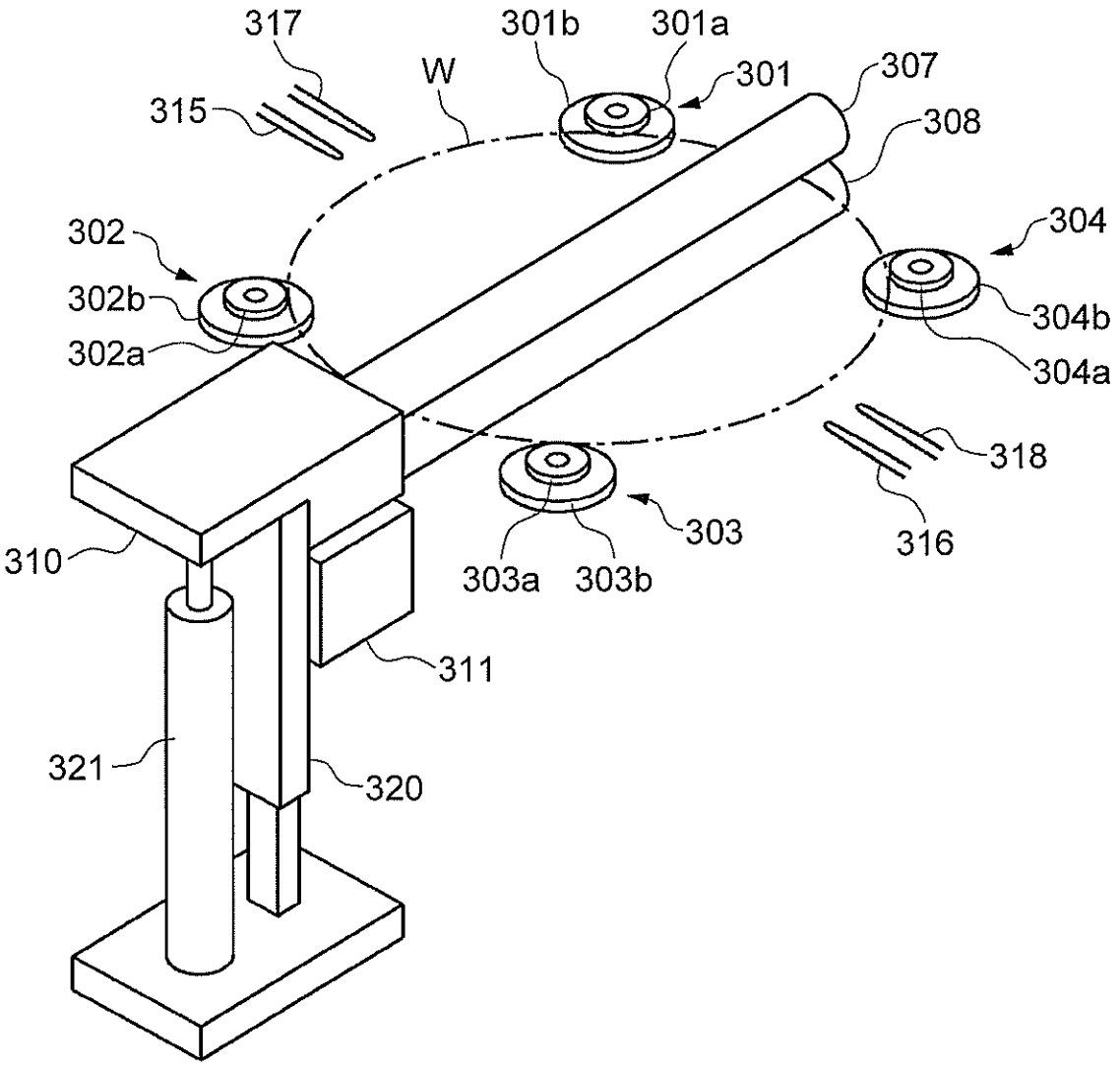
317
301b
301a
W
301
307
315
308
302
304
302b
304b
302a
304a
318
303
316
303a
303b
310
311
321
320

FIG. 1 2

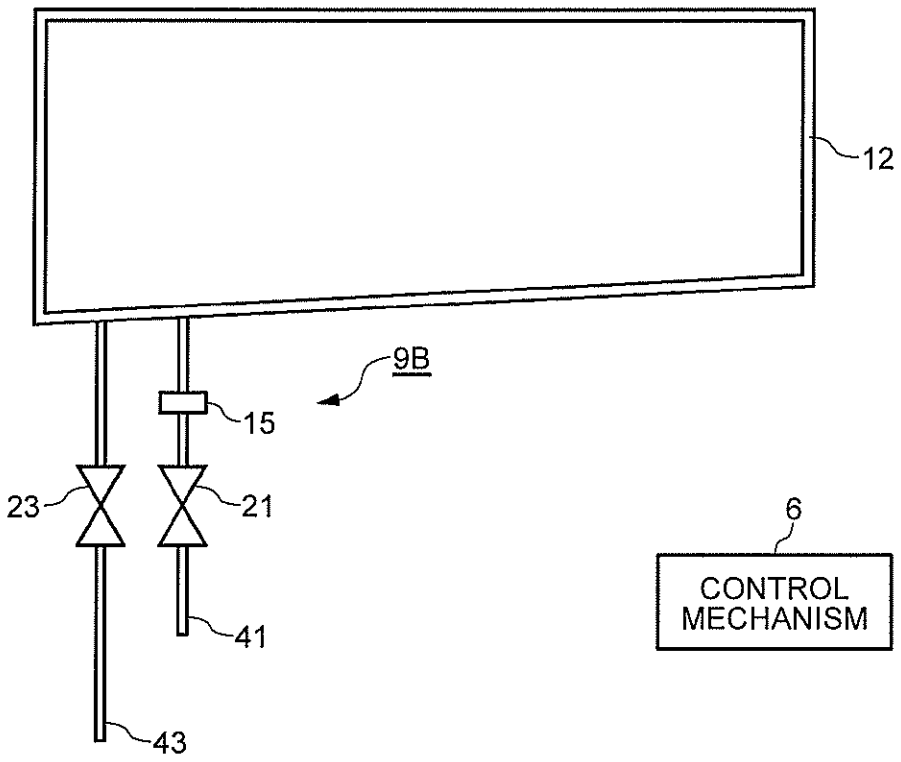

FIG. 1 3

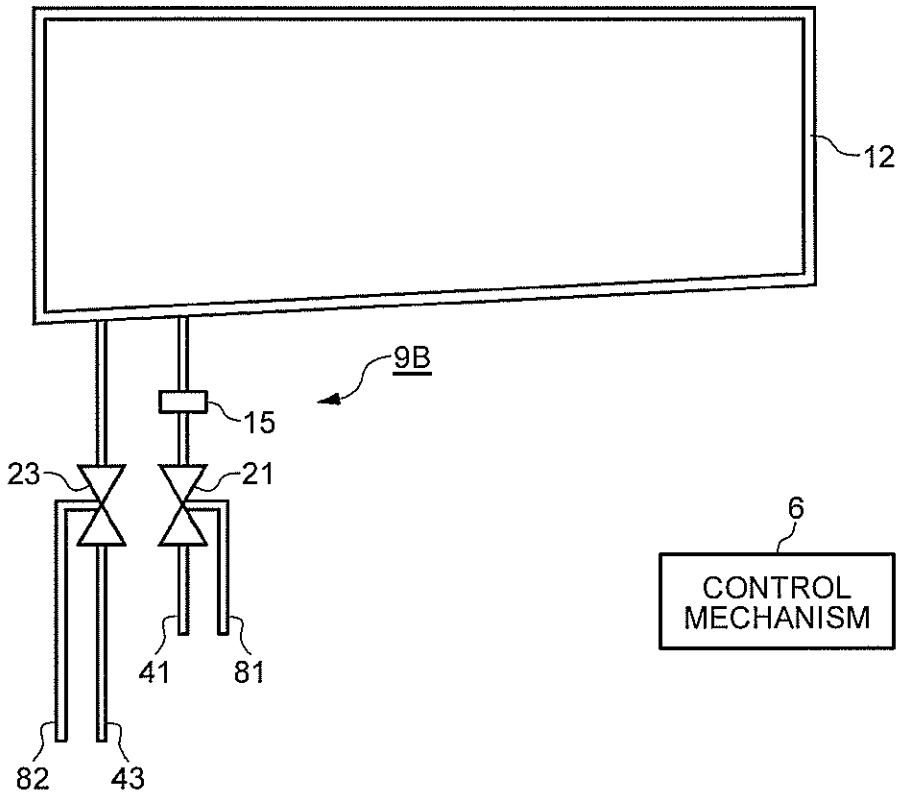

FIG. 1 4